AO 121 (6/90)

TO:	
COMMISSIONER OF PATENTS AND TRADEMARKS (USPTO) P.O. Box 1450 Alexandria, VA 22313-1450	REPORT ON THE FILING OF DETERMINATION OF AN ACTION REGARDING A PATENT OR TRADEMARK

In compliance with 35 U.S.C. 290 and/or 15 U.S.C. 1116 you are hereby advised that a court action has been filed on the following patent(s)/trademark(s) in the U.S. District Court:

DOCKET NO. 15-cv-02259	DATE FILED: 3/16/2015	UNITED STATES DISTRICT COURT, NORTHERN DISTRICT OF ILLINOIS, EASTERN DIVISION
Plaintiff(s): Innovatio IP Ventures, LLC	**Defendant(s):** Marvell Semiconductor Inc	

PATENT NUMBER	DATE OF PATENT	HOLDER OF PATENT
See Attached	See Attached	See Attached

In the above-entitled case, the following trademarks(s) have been included:

DATE INCLUDED	INCLUDED BY [ ] Amendment [ ] Answer [ ] Cross Bill [ ] Other Pleading	
TRADEMARK NUMBER	DATE OF TRADEMARK	HOLDER OF PATENT OR TRADEMARK

In the above-entitled case, the following decision has been rendered or judgment issued:

DECISION/JUDGMENT:		
CLERK - Thomas G. Bruton	DEPUTY CLERK: Nadine Finley	DATE: 01/25/2017

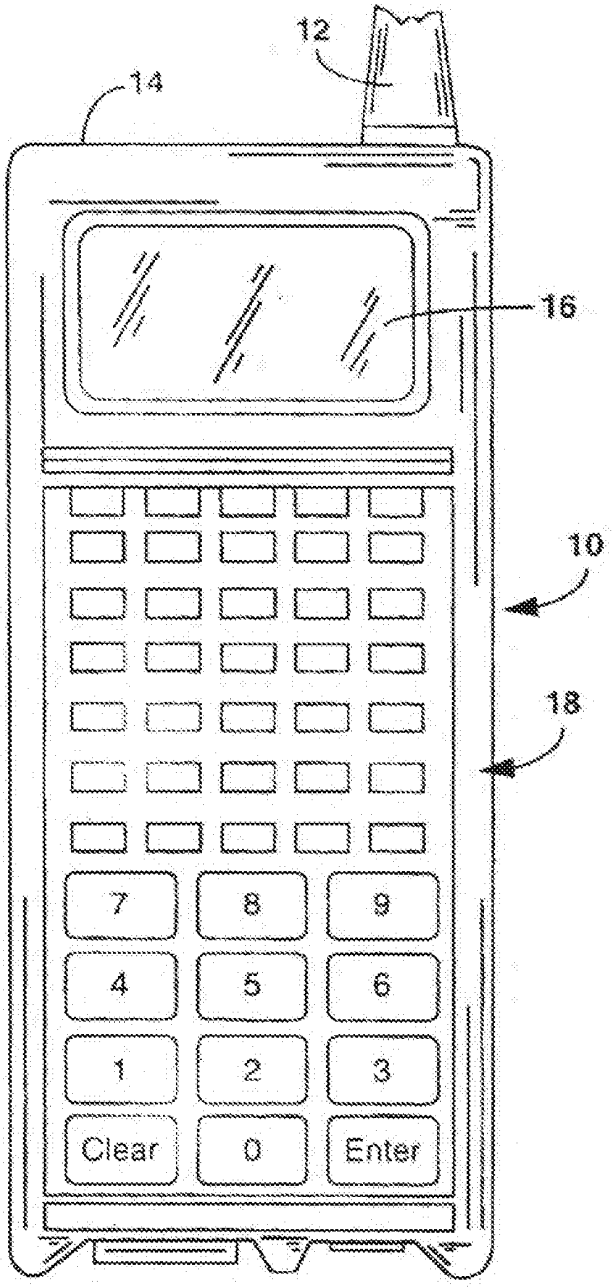

FIG. 2A

least one of the plurality of bridging nodes an indication of whether the at least one of the plurality of terminal nodes operates in the power saving state.

7. The communication network of claim 5 wherein at least one of the plurality of wireless terminal nodes comprises a battery-powered, roaming device.

8. The communication network of claim 7 wherein the plurality of bridging devices participate in spanning tree routing to support the battery-powered, roaming device.

9. The communication network of claim 5 wherein each of those of the plurality of wireless terminal nodes that directs further operation of its receiver to receive the message does so to receive the message in a time period that follows one of the received beacons.

10. The communication network of claim 9 wherein the time period immediately follows the one of the received beacons.

11. The communication network of claim 9 wherein the plurality of terminal nodes each having a wireless transmitter that is used to request the message awaiting delivery.

12. The communication network of claim 9 wherein at least one of those of the plurality of wireless terminal nodes that operate in the power saving state synchronize operation of their receivers to receive the beacons from the at least one of the plurality of bridging nodes even when one or more of the beacons from the at least one of the plurality of bridging nodes have not been received.

13. The communication network of claim 9 wherein the plurality of bridging nodes queue the messages awaiting delivery, and remove from the queue those of the messages awaiting delivery where delivery is unsuccessful.

14. The communication network of claim 13 wherein the messages awaiting delivery remain in the queue until delivery is successful or until a predetermined number of the beacons occur wherein delivery is unsuccessful.

15. The communication network of claim 9 wherein the time period follows the one of the received beacons during an awake time window.

16. The communication network of claim 15 wherein the plurality of terminal nodes each having a wireless transmitter that is used to request that the message awaiting delivery be delivered during the awake time window.

17. The communication network of claim 15 wherein the awake time window occurs an offset time following the one of the received beacons.

18. The communication network of claim 17 wherein the plurality of terminal nodes each having a wireless transmitter that is used to request that the message awaiting delivery be delivered during the awake time window at the offset time, wherein the awake time window and the offset time are communicated with the request.

19. A communication network supporting wireless communication of messages, said communication network comprising:

a plurality of terminal nodes each having a wireless receiver operable in a first state or in a second state, wherein, in the second state, attempts are made to minimize power consumption by the wireless receiver;

a plurality of bridging nodes each having a wireless transceiver to support wireless communication to the plurality of terminal nodes;

each of the plurality of bridging nodes attempt to deliver messages destined for those of the plurality of terminal nodes that operate in the second state by transmitting at predetermined intervals beacons that identify those of the plurality of wireless terminal nodes operating in the second state that have a message awaiting delivery;

those of the plurality of wireless terminal nodes that operate in the second state synchronize operation of their receivers to receive the beacons from at least one of the plurality of bridging nodes;

each of those of the plurality of wireless terminal nodes operating in the second state that determines from the received beacons that it has a message awaiting delivery directs further operation of its receiver to receive the message; and

the plurality of bridging nodes deliver messages destined for those of the plurality of terminal nodes that operate in the first state without requiring those of the plurality of terminal nodes that operate in the first state to determine from the beacons that they have messages awaiting delivery.

20. The communication network of claim 19 wherein the plurality of terminal nodes each having a wireless transmitter that is used to request the message awaiting delivery.

21. The communication network of claim 19 wherein at least one of the plurality of terminal nodes communicate to at least one of the plurality of bridging nodes an indication of whether the at least one of the plurality of terminal nodes operates in the second state.

22. The communication network of claim 19 wherein each of the plurality of bridging nodes queue the messages awaiting delivery, and remove from the queue those of the messages awaiting delivery where delivery is unsuccessful.

23. The communication network of claim 22 wherein the messages awaiting delivery remain in the queue until delivery is successful or until a predetermined number of the beacons occur wherein delivery is unsuccessful.

24. The communication network of claim 19 wherein at least one of the plurality of wireless terminal nodes comprises a battery-powered, roaming device.

25. The communication network of claim 24 wherein the plurality of bridging devices participate in spanning tree routing to support the battery-powered, roaming device.

26. The communication network of claim 19 wherein each of those of the plurality of wireless terminal nodes that directs further operation of its receiver to receive the message does so to receive the message in a time period that follows one of the received beacons.

27. The communication network of claim 26 wherein the time period immediately follows the one of the received beacons.

28. The communication network of claim 26 wherein at least one of those of the plurality of wireless terminal nodes that operate in the second state synchronize operation of their receivers to receive the beacons from the at least one of the plurality of bridging nodes even when one or more of the beacons from the at least one of the plurality of bridging nodes have not been received.

29. The communication network of claim 26 wherein the time period follows the one of the received beacons during an awake time window.

30. The communication network of claim 29 wherein the awake time window occurs an offset time following the one of the received beacons.

31. The communication network of claim 30 wherein the plurality of terminal nodes each having a wireless transmitter that is used to request that the message awaiting delivery be delivered during the awake time window at the offset time, wherein the awake time window and the offset time are communicated with the request.

32. The communication network of claim 29 wherein the plurality of terminal nodes each having a wireless transmitter that is used to request that the message awaiting delivery be delivered during the awake time window.

* * * * *

Exhibit D

US007916747B2

(12) **United States Patent**
Meier

(10) **Patent No.: US 7,916,747 B2**
(45) **Date of Patent: *Mar. 29, 2011**

(54) **REDUNDANT RADIO FREQUENCY NETWORK HAVING A ROAMING TERMINAL COMMUNICATION PROTOCOL**

(75) Inventor: **Robert C. Meier**, Cedar Rapids, IA (US)

(73) Assignee: **Broadcom Corporation**, Irvine, CA (US)

(*) Notice: Subject to any disclaimer, the term of this patent is extended or adjusted under 35 U.S.C. 154(b) by 12 days.

This patent is subject to a terminal disclaimer.

(21) Appl. No.: **12/121,536**

(22) Filed: **May 15, 2008**

(65) **Prior Publication Data**

US 2008/0285489 A1 Nov. 20, 2008

Related U.S. Application Data

(63) Continuation of application No. 10/762,746, filed on Jan. 22, 2004, now Pat. No. 7,386,002, which is a continuation of application No. 09/960,265, filed on Sep. 21, 2001, now Pat. No. 6,714,559, which is a continuation of application No. 09/849,776, filed on May 4, 2001, now abandoned, which is a continuation of application No. 09/482,197, filed on Jan. 12, 2000, now abandoned, which is a continuation of application No. 08/941,496, filed on Sep. 30, 1997, now abandoned, which is a continuation of application No. 08/270,533, filed on Jul. 5, 1994, now Pat. No. 5,673,031.

(51) **Int. Cl.**
H04Q 1/00 (2006.01)

(52) **U.S. Cl.** **370/449**; 340/3.51

(58) **Field of Classification Search** 370/280, 370/256, 338, 346, 447, 449; 340/3.51
See application file for complete search history.

(56) **References Cited**

U.S. PATENT DOCUMENTS

4,063,220 A 12/1977 Metcalfe et al.
4,251,865 A 2/1981 Moore et al.
4,332,027 A 5/1982 Malcolm

(Continued)

FOREIGN PATENT DOCUMENTS

JP 53-10206 1/1978

(Continued)

OTHER PUBLICATIONS

W. Stallings, Local and Metropolitan Area Networks, 1997, pp. 378-383.

(Continued)

Primary Examiner — Edwin C Holloway, III
(74) *Attorney, Agent, or Firm* — McAndrews, Held & Malloy, Ltd.

(57) **ABSTRACT**

Disclosed herein is a redundant network and communication protocol at least including host computers, RF base stations, and roaming terminals. The network may utilize a polling communication protocol such that under heavy traffic conditions, a roaming terminal wishing to initiate communication may be required to wait for at least a predetermined period and determine whether the channel is available for communication. When a hidden terminal is communicating, the roaming terminal may conclude that the communication is taking place upon receiving a polling frame directed to the hidden terminal from the normally silent base station. Inherent redundancy techniques may be used with a spanning tree approach for determining the most efficient pathways from a source to a destination and ensuring that the network adapts to spatial changes or breakdowns within the network.

25 Claims, 6 Drawing Sheets

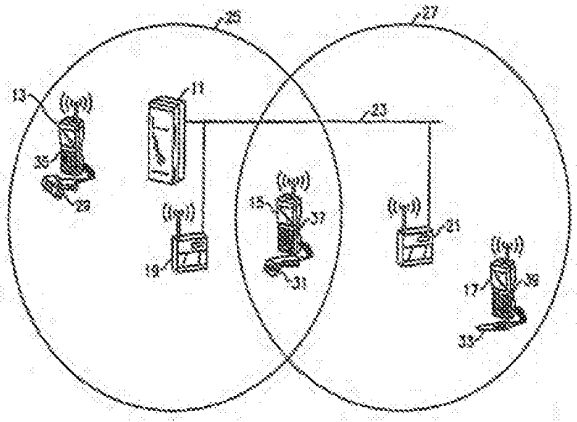

U.S. PATENT DOCUMENTS

4,352,955	A	10/1982	Kai et al.	
4,369,443	A	1/1983	Giallanza et al.	
4,477,809	A	10/1984	Bose	
4,661,902	A	4/1987	Hochsprung	
4,670,899	A	6/1987	Brody et al.	
4,679,244	A	7/1987	Kawasaki et al.	
4,689,786	A	8/1987	Sidhu	
4,707,829	A	11/1987	Pendse	
4,807,222	A	2/1989	Amitay	
4,809,257	A *	2/1989	Gantenbein et al.	398/128
4,823,111	A *	4/1989	Tsuchiya et al.	370/408
4,881,271	A	11/1989	Yamauchi et al.	
4,910,794	A	3/1990	Mahany	
4,945,532	A	7/1990	Hald	
4,987,571	A	1/1991	Haymond	
5,047,083	A	8/1991	Ichikawa	
5,058,208	A	10/1991	Huang et al.	
5,070,536	A	12/1991	Mahany et al.	
5,142,550	A	8/1992	Tymes	
5,164,942	A	11/1992	Kamerman et al.	
5,170,394	A	12/1992	Biber et al.	
5,175,537	A	12/1992	Jaffe	
5,214,647	A	5/1993	Kumatsu	
5,231,634	A *	7/1993	Giles et al.	370/348
5,241,542	A *	8/1993	Natarajan et al.	370/311
5,295,154	A	3/1994	Meier	
5,359,320	A	10/1994	Jaffe et al.	
5,471,469	A	11/1995	Flammer et al.	
5,485,147	A	1/1996	Jeffe	
5,625,825	A	4/1997	Rostoker	
5,673,031	A	9/1997	Meier	
5,687,175	A	11/1997	Rochester et al.	
6,714,559	B1	3/2004	Meier	
7,386,002	B2 *	6/2008	Meier	370/449
7,535,921	B2 *	5/2009	Meier	370/449

FOREIGN PATENT DOCUMENTS

JP	58159036	9/1983
JP	61100041	5/1986
JP	61251251	11/1986
JP	1117533	5/1989
JP	1119146	5/1989
JP	1152837	5/1989
JP	1143536	6/1989
JP	1305637	12/1989
JP	2051922	2/1990
JP	3268534	11/1991
JP	4123678	4/1992
JP	4199934	7/1992
JP	4259140	9/1992
JP	5253132	10/1993
WO	WO 96-10304	4/1996

OTHER PUBLICATIONS

Andrews, et al., "Inside Apple Talk, 2nd Edition", Addison-Wesley Publishing Company, 1990.

Fakhouri et al., "Coding and Multiple Access Techniques for Data Transmission in Land-Mobile Satellite Networks", IEEE Pacific Rim Conference on Communications, Computers and Signal Processing, pp. 410-413, May 9-10, 1991.

Glass et al., "Broad-Band Networks for LAN and Radio Applications", IEEE 38th Vehicular Technology Conference, pp. 44-51, Jun. 15-17, 1988.

Hashemi et al., "An Efficient Reservation System for Local Area Networks Based on CSMA/CD", IEEE Pacific Rim Conference on Communications, Computers and Signal Processing, pp. 1-4, Jun. 1-3, 1989.

Hu et al., "Collision Resolution Algorithms for CDMA Systems", IEEE Journal on Selected Areas in Communications, vol. 8, No. 4, pp. 542-554, May 1990.

Karn, "MACA—A New Channel Access Method for Packet Radio", ARRL/CRRL Amateur Radio 9th Computer Networking Conference, pp. 134-140, Sep. 1990.

Kleinrock et al., "Packet Switching in Radio Channels: New Conflict-Free Multiple Access Schemes", IEEE Transactions on Communications, vol. COM-28, No. 7, pp. 1015-1029, Jul. 1980.

Kleinrock, "On Queueing Problems in Random-Access Communications", IEEE Transactions on Information Theory, vol. IT-31, No. 2, pp. 166-175, Mar. 1985.

Kleinrock, "On Resource Sharing in a Distributed Communication Network", IEEE Communications Magazine, pp. 27-34, Jan. 1979.

Leiner et al., "Issues in Packet Radio Network Design", IEEE Proceedings, vol. 75, No. 1, pp. 6-20, Jan. 1987.

Onunga et al., "Personal Computer Communications on Intrabuilding Power Line LAN's Using CSMA With Priority Acknowledgements", IEEE Journal on Selected Areas in Communications, vol. 7, No. 2, pp. 180-191, Feb. 1989.

Peha et al., "Implementation Strategies for Scheduling Algorithms in Integrated-Services Packet-Switched Networks", Global Telecommunications Conference, 1991, GLOBECOM '91, pp. 1733-1740, Dec. 2-5, 1991.

Scholl et al., "On a Mixed Mode Multiple Access Scheme for Packet-Switched Radio Channels", IEEE Transactions on Communications, vol. COM-27, No. 6, pp. 906-911, Jun. 1979.

Takagi et al., "A Tutorial on the Analysis of Polling Systems", Computer Science Dept., Univ. of Calif., Los Angeles, Jan. 1, 1984.

Tan et al., "A New Free-Access Collision Resolution Algorithm Based Connection Request procedure for Land Mobile Satellite Systems", INFOCOM '89, Eighth Annual Joint Conference of the IEEE Computer and Communications Societies Proceedings, pp. 1057-1062, 1989.

Tanenbaum, Computer Networks, Prentice-Hall, Inc., 1981.

Tanenbaum, Computer Networks, 2nd Edition, Prentice-Hall, Inc., 1988.

Tobagi et al, "Packet Switching in Radio Channels: Part IV Stability Considerations and Dynamic Control in Carrier Sense Multiple Access", IEEE Transactions on Communications, vol. COM-25, No. 10, pp. 1130-1119, Oct. 1977.

Tobagi et al., "Packet Radio and Satellite Networks", IEEE Communications Magazine, vol. 22, No. 11, pp. 24-40, Nov. 1984.

Tobagi et al., "Packet Switching in Radio Channels: Part III-Polling and (Dynamic) Split-Channel Reservation Multiple Access", IEEE Transactions on Communications, vol. COM-24, No. 8, pp. 832-845, Aug. 1976.

Tobagi et al., "Packet Switching in Radio Channels: Part I—Carrier Sense Multiple-Access and Their Throughput-Delay Characteristics", IEEE Transactions on Communications, vol. CCOM-23, No. 12, pp. 1400-1416, Dec. 1975.

Tobagi et al., "Packet Switching in Radio Channels: Part II—The Hidden Terminal Problem in Carrier Sense Multiple-Access and the Busy-Tone Solution", IEEE Transactions on Communications, vol. CCOM-23, No. 12, pp. 1417-1433, Dec. 1975.

Tobagi, "Multiaccess Protocols in Packet Communication System", IEEE Transactions on Communications, vol. COM-28, No. 4, pp. 468-488, Apr. 1980.

Yue, "Performance Analysis of Cellular Mobile Radio Systems Using Slotted ALOHA Protocol With Capture", IEEE Pacific Rim Conference on Communications, Computers and Signal Processing, pp. 550-553, May 9-10, 1991.

Plaintiff and Counterdefendant Qualcomm Incorporated's Preliminary Invalidity Contentions for U.S. Patent Nos. 5,500,872, 5,627,412, 5,946,344, 6,075,807, 6,320,896, and 6,714,559, Jul. 21, 2006.

Johnson, "Thoughts on an Adaptive Link Level Protocol," Tucson Amateur Packet Radio Colorado Springs, 1989.

Sidhu et al., "Inside Appletalk", Second Edition, Addison-Wesley Publishing Company, Inc., 1990.

Claim Construction Order for U.S. Patent No. 6,714,559, Aug. 28, 2006.

Backes, "Spanning Tree Bridges, Transparent Bridges for Interconnection of IEEE 802 LANS", IEEE Network, vol. 2, No. 1, Jan. 1988.

Huang et al., "Throughput Analysis and Protocol Design for CSMA and BTMA Protocols Under Noisy Environments", IEEE Proceedings-I, vol. 139, No. 3, Jun. 1992.

Johnson, "Thoughts on an Adaptive Link Level Protocol," Oct. 7, 1989.

Kiesel et al., "A New CSMA-CD Protocol for Local Area Networks with Dynamic Priorities and Low Collision Probability", IEEE Journal on Selected Areas in Communications, vol. SAC-1, No. 5, Nov. 1983.
Kleinrock et al, "Spatial Reuse in Multihop Packet Radio Networks", Proceedings of the IEEE, vol. 75, No. 1, Jan. 1987.
Marsan et al., "Multichannel Local Area Network Protocols", IEEE Journal on Selected Areas in Communications, vol. SAC-1, No. 5, Nov. 1983.
Omiaga et al., "Performance Analysis of CSMA with Priority Acknowledgments (CSMA/PA) on Noisy Data Networks with Finite User Population", IEEE Transactions on Communications, vol. 29, No. 7, Jul. 1991.
Pursley, "The Role of Spread Spectrum in Packet Radio Networks", Proceedings of the IEEE, vol. 75, No. 1, Jan. 1987.
Takagi et al., "Throughput Analysis for Persistent CSMA Systems", IEEE Transactions on Communications, vol. Com-33, No. 7, Jul. 1985.
Tsao, "A Local Area Network Architecture Overview, Defining LAN Environments and User Needs", IEEE Communications Magazine vol. 22, No. 8, Aug. 1984.
Yang, Yaling and Kravets, Robin, "Contention-Aware Admission Control for Ad Hoc Networks", IEEE Transactions on Mobile Computing, vol. 4, No. 4, Jul. 2005-Aug. 2005.
Case Management Order in *Qualcomm Inc. v. Broadcom Corp.*, 05-cv-1392 B (BLM), Dec. 12, 2005.
Expert Report of Zygmunt J. Haas, Ph.D. Regarding the Invalidity of U.S. Patent 6,714,559, Nov. 27, 2006.
Fapojuwo et al., "Message and Packet Access Delays in CSMA-CD Local Area Networks", In Proceedings of the 8th Annual Joint Conference of the IEEE Computer and Communications Societies, INFOCOM'89, "Technology: Emerging or Converging?" pp. 849-857, vol. 3, Call No. 10.1109/INFOCOM.1989.101535, Apr. 27, 1989.
Fapojuwo et al., "Multipacket Message Transmission on CSMA-CD LANs using Limited and Gated Strategies", In Proceedings of the IEEE Pacific Rim Conference on Communications, Computers and Signal Processing, pp. 12-15, Call No. 10.1109/PACRIM.1989.48294, Jun. 2, 1989.
Fapojuwo et al., "Stability Consideration of Buffered CSMA/CD System with Multipacket Messages", Electronics Letters, vol. 25, No. 2, pp. 122-124, Jan. 29, 1989.
Expert Report of Peter McGuiggan, Regarding the Invalidity of U.S. Patent 6,714,559, Dec. 18, 2006.
Qualcomm Prior Art list for 6,714,559, Dec. 13, 2006

* cited by examiner

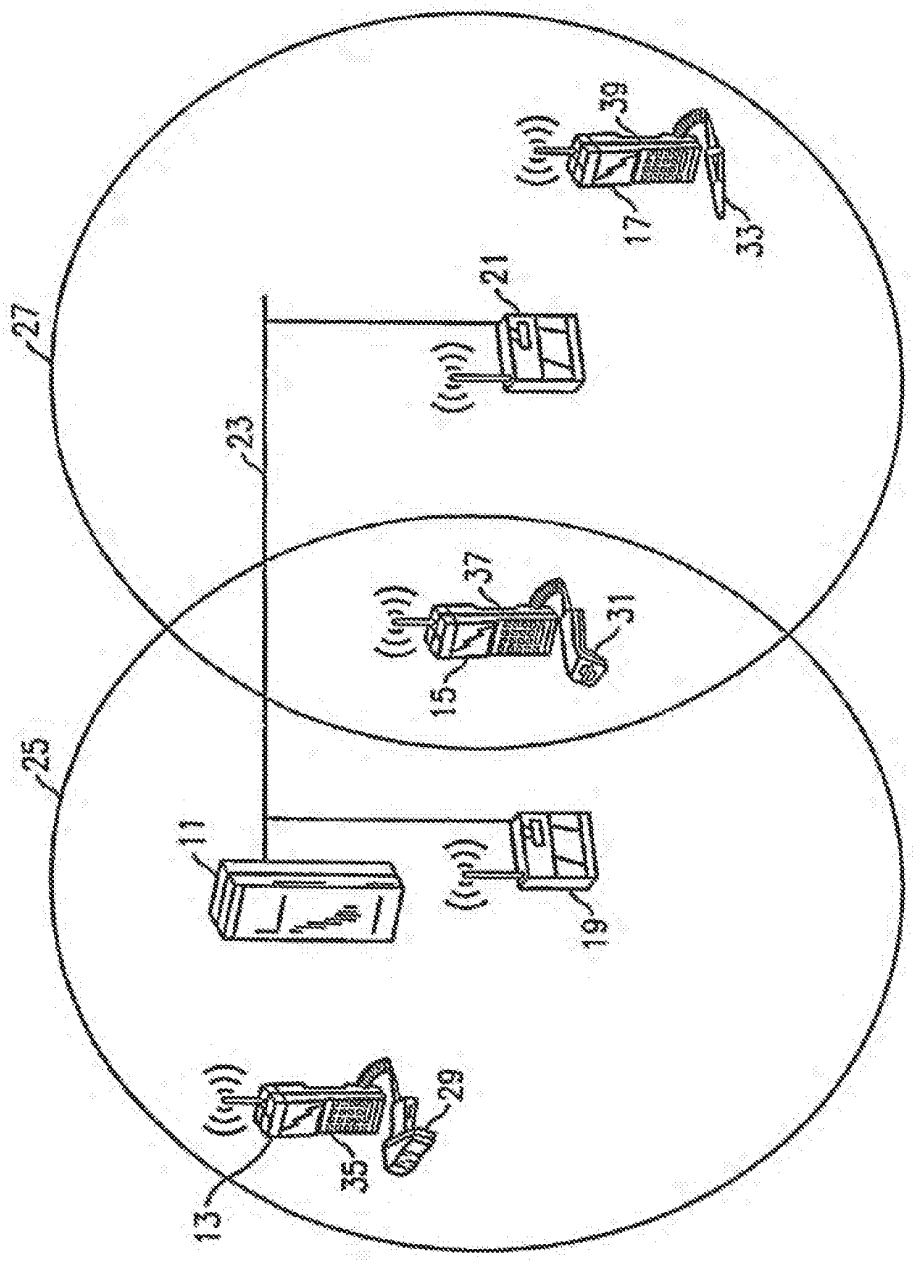

FIG. 1

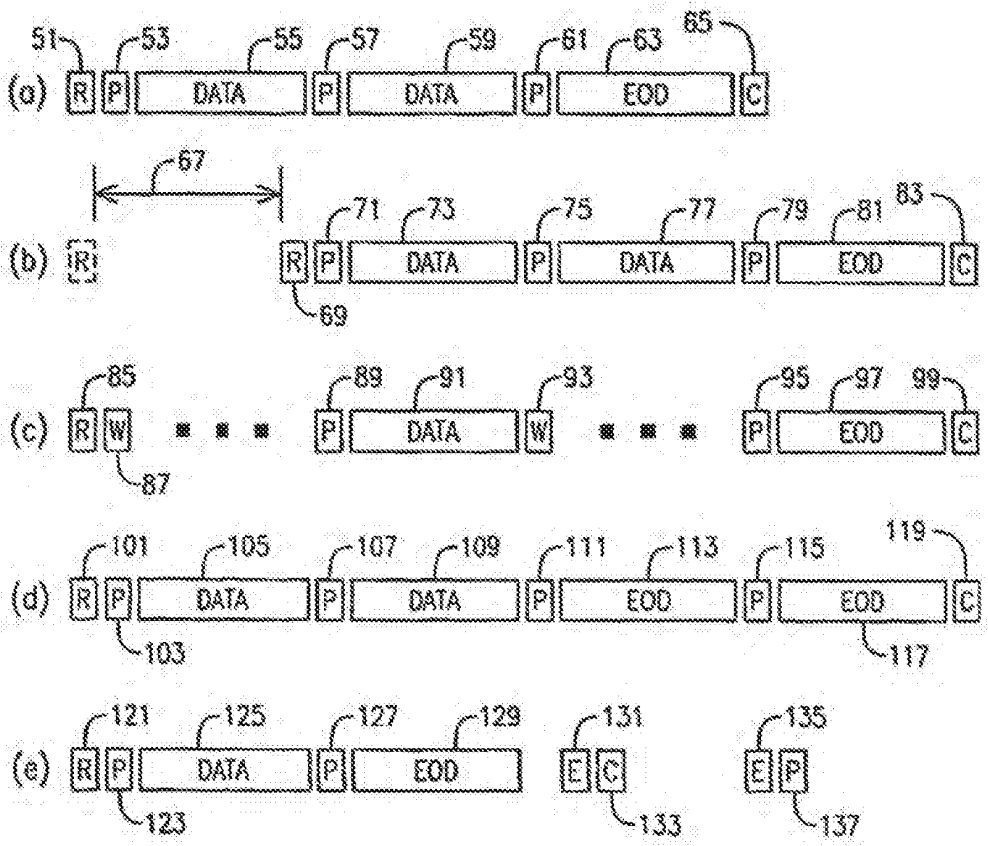
(a)
R P DATA P DATA P EOD C
(b)
R
R P DATA P DATA P EOD C
(c)
R W
P DATA W
P EOD C
(d)
R P DATA P DATA P EOD P EOD C
(e)
R P DATA P EOD
E C
E P

FIG. 2

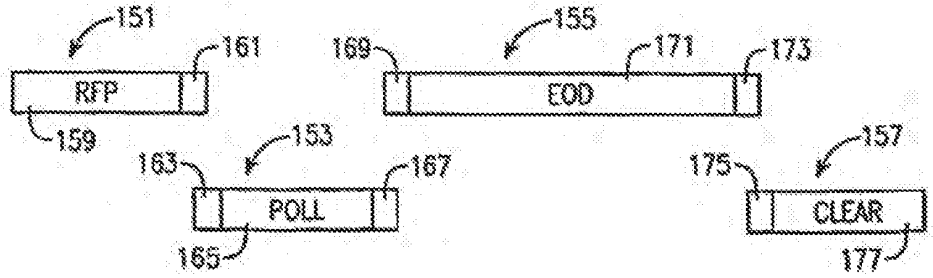
RFP
EOD
POLL
CLEAR

FIG. 3

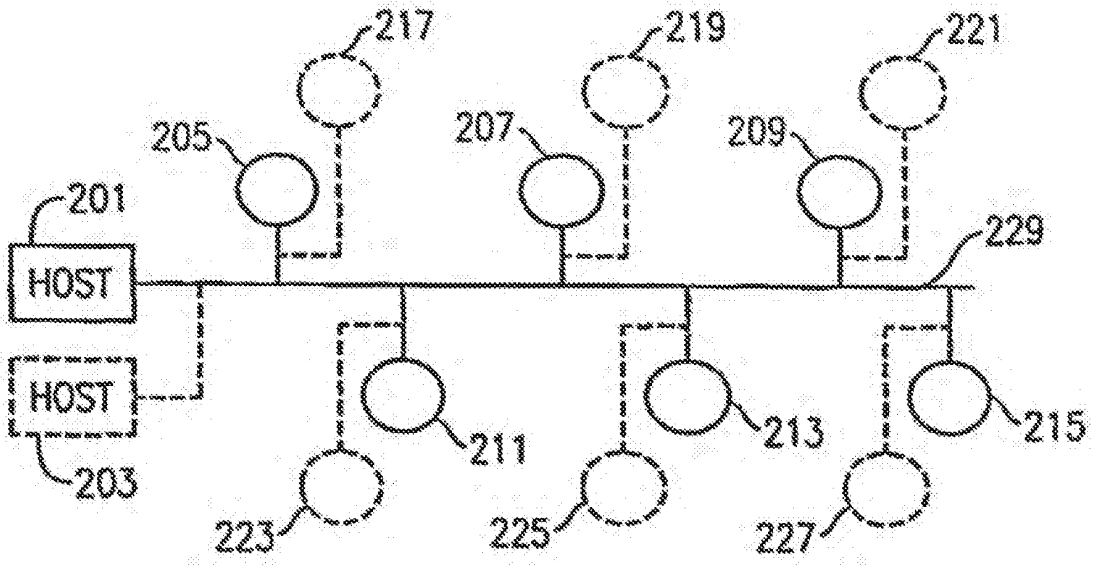
217
219
221
205
207
209
201
HOST
229
HOST
211
213
215
203
223
225
227

FIG. 4

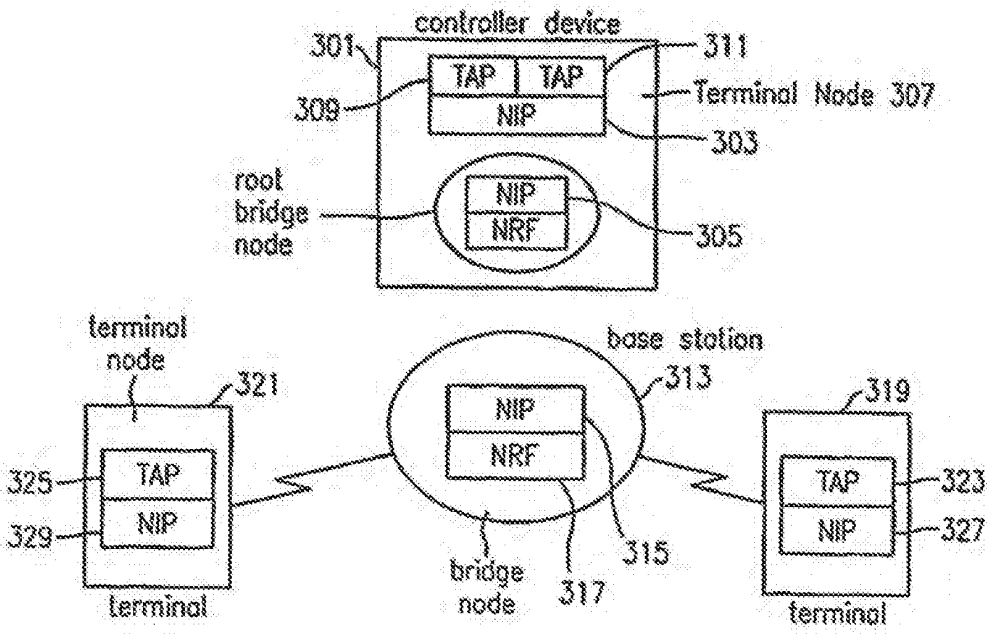
controller device
301
311
TAP
TAP
Terminal Node 307
309
NIP
303
root
bridge
node
NIP
NRF
305
terminal
node
321
base station
313
319
NIP
NRF
325
TAP
TAP
323
329
NIP
NIP
327
315
bridge
node
317
terminal
terminal

FIG. 5

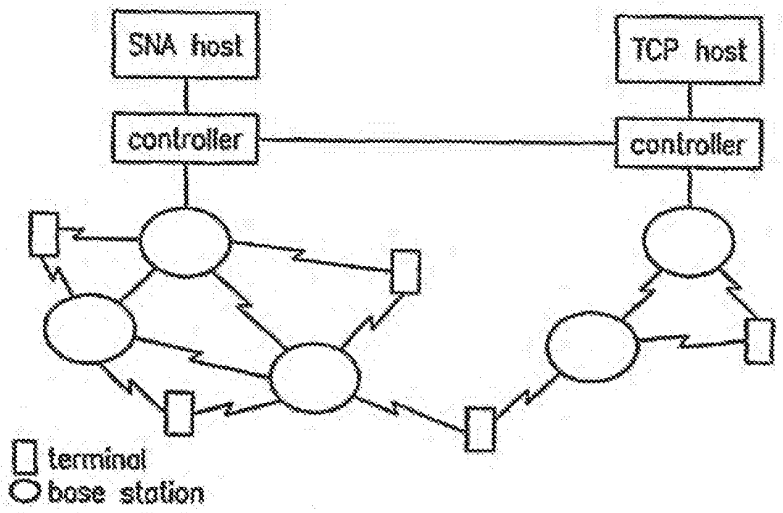
SNA host
TCP host
controller
controller
terminal
base station

FIG. 6

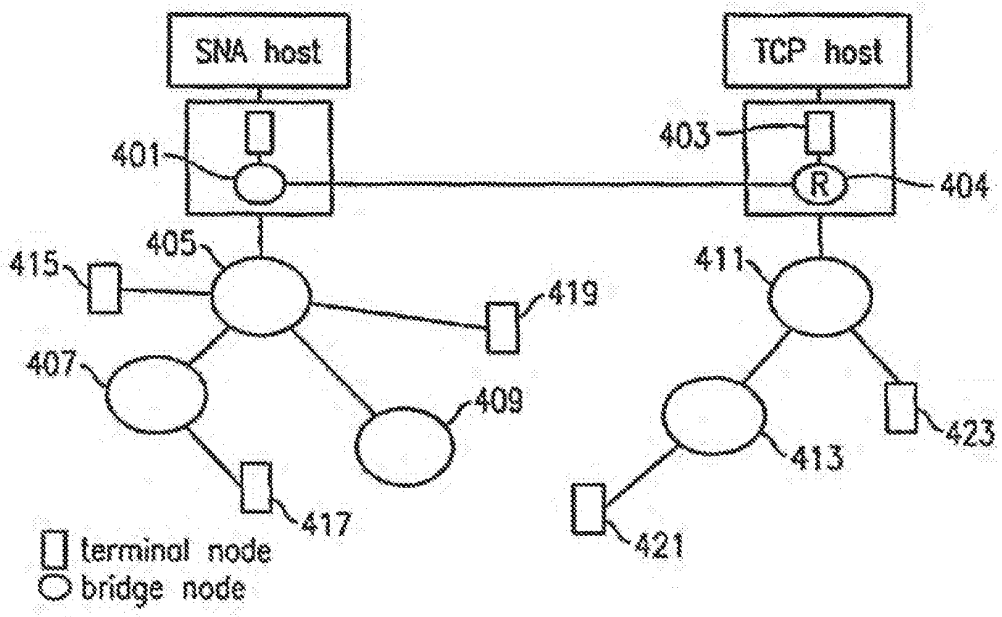
SNA host
TCP host
401
403
404
R
405
415
419
411
407
409
413
423
417
421
terminal node
bridge node

FIG. 7

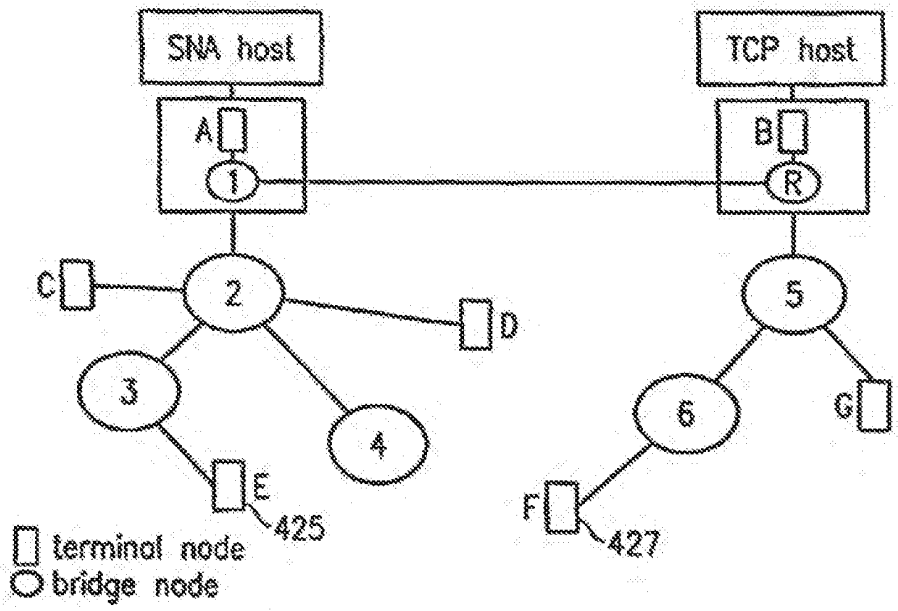
SNA host
TCP host
A
B
1
R
C
2
D
5
3
6
G
4
E
425
F
427
terminal node
bridge node

FIG. 8

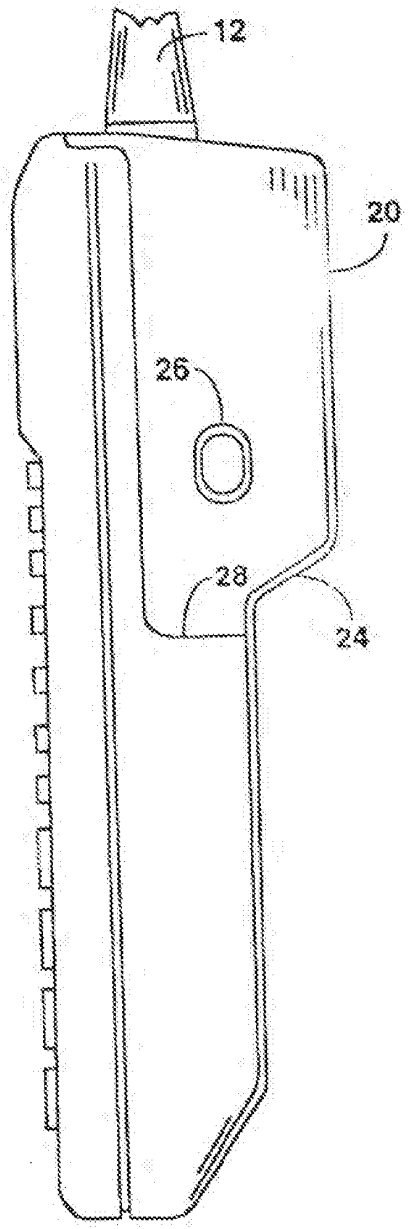

FIG. 2B

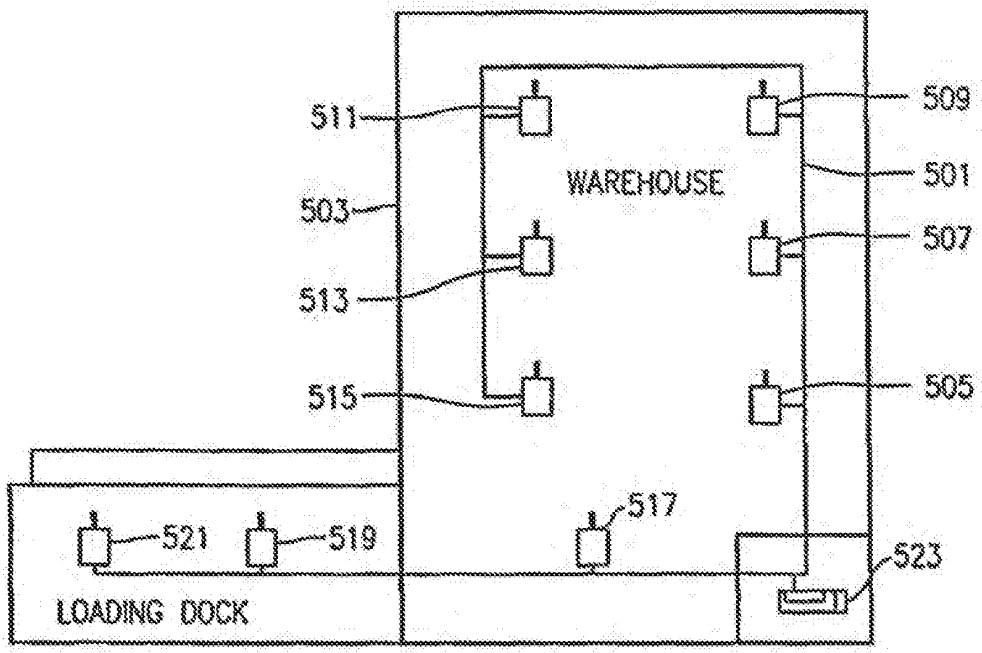
511
509
WAREHOUSE
501
503
507
513
515
505
517
521
519
523
LOADING DOCK

FIG. 9

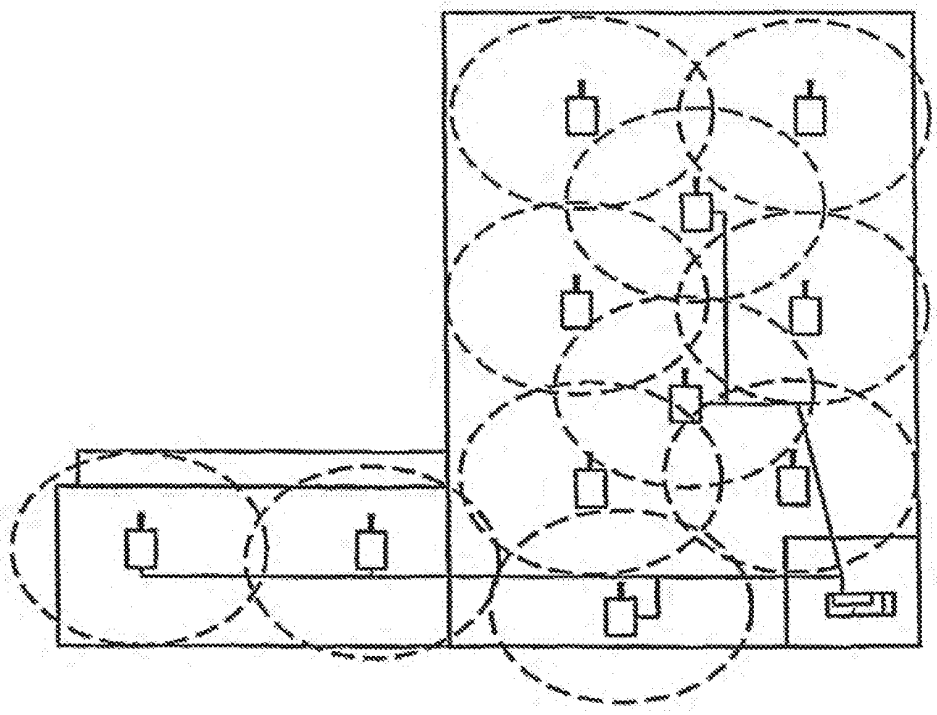

FIG. 10

REDUNDANT RADIO FREQUENCY NETWORK HAVING A ROAMING TERMINAL COMMUNICATION PROTOCOL

CROSS REFERENCE TO RELATED APPLICATIONS

The present application is a continuation of U.S. application Ser. No. 10/762,746 filed Jan. 22, 2004, now U.S. Pat. No. 7,386,002, which is a continuation of U.S. application Ser. No. 09/960,265 filed Sep. 21, 2001, now U.S. Pat. No. 6,714,559, which is a continuation of U.S. application Ser. No. 09/849,776 filed May 4, 2001, now abandoned, which is a continuation of U.S. application Ser. No. 09/482,197, filed Jan. 12, 2000, now abandoned, which is a continuation of U.S. application Ser. No. 08/941,406 filed Sep. 30, 1997, now abandoned, which is a continuation of U.S. application Ser. No. 08/270,533 filed Jul. 5, 1994, now U.S. Pat. No. 5,673,031. Said application Ser. No. 08/270,533 is hereby incorporated herein by reference in its entirety including Appendices A and B.

This application is also related to U.S. patent application Ser. No. 11/223,404, filed Sep. 9, 2005, now U.S. Pat. No. 7,548,553; and U.S. patent application Ser. No. 11/222,915, filed Sep. 9, 2005, now U.S. Pat. No. 7,535,921.

INCORPORATION BY REFERENCE

Applicant hereby incorporates herein by reference U.S. Ser. No. 07/910,865, filed Jul. 6, 1992 by Mahaney et al., now abandoned.

TECHNICAL FIELD

The present invention relates to a redundant radio frequency (RF) network having a communication protocol for servicing roaming terminals, and more particularly, relates to a redundant communication network having a polling protocol which allows roaming terminals to selectively communicate using spread spectrum RF transmissions with host computers or with other roaming terminals through a network of many available base stations.

BACKGROUND OF THE INVENTION

Radio frequency (RF) communication networks and protocols are known having remote, roaming terminals which communicate through a variety of types of communication links to host computers. Based on the overall spatial layout, response time and loading requirements of the network, different networking schemes and communication protocols have been sought so as to most efficiently regulate the communications.

Particular advantages have been identified in the use of RF communication links such as allowing remote terminals to "roam", free from hard-wired cable connections. In basic configurations, a single host computer communicates along some hard-wired link to an RF base station which would maintain an RF communication link to a single roaming terminal. As long as the roaming terminal stays within range of the RF base station and no other roaming terminals are needed, a very simple network configuration and communication protocol can be used. However, when faced with hundreds of roaming terminals which move in and out of the range of multiple RF base stations, networking and protocol problems emerge.

To solve these problems, attempts have been made to decrease the number of base stations by increasing the base stations range; however, the range of the often battery-powered roaming terminals cannot match the increased range of the wall-socket-powered RF base stations. Moreover, by increasing the range, collisions due to propagation times also increase, slowing down the overall communication time.

Other attempts have been made to increase the number of RF base stations so as to cover the entire roaming area. Although this solves the range problems associated with a single RF base station, additional problems result. First, roaming terminals which are in an overlapping range region between RF base stations communicate with one base station but receive unwanted communication from the other. Second, each roaming terminal often receives unwanted communication from other roaming-terminals. Similarly, each roaming terminal often encounters "hidden" communications from other roaming terminals to a common base station. Because of these encounters, each roaming terminal often transmits over the "hidden" communications causing collisions.

Additionally, as the number of RF base stations increase, communication pathways from the source to destination become more and more complex. In a network with fixed spatial locations of base stations, host computers and remote terminals, these communication pathways from a source to a destination can easily be determined. In an environment in which the spatial layout of the network continually changes, however, determining the most efficient pathways becomes very difficult. This is because the most efficient pathway from a source to a destination continually changes due to: 1) the movement of the roaming terminals; 2) the relocation of RF base stations; and 3) the occasional break down of RF base stations and host computers.

Communication networks are also known which are often partially or completely disabled upon the break down of a single element of the network.

It is therefore an object of the present invention to provide a communication protocol between the base stations and roaming terminals for optimizing the utilization of the RF range of each base station.

It is a further object of the present invention to provide an adaptive communication network with inherent redundancy.

It is another object of the present invention to provide a communication protocol for use in a network of host computers, base stations and roaming terminals which is not susceptible to collisions with "hidden" communications.

It is yet another object of the present invention to provide a communication protocol which minimizes collisions in the overlapping regions of different RF base stations.

SUMMARY OF THE INVENTION

These and other objects are achieved in a method of beginning a data exchange over an RF communication link. The sending device initially identifies the fact that the RF communication link is clear during a period at least as long as the maximum interpoll gap. Thereafter, a request for poll frame is transmitted by the sending device.

In addition, these and other objects are achieved in a method used by a remote terminal having an RF range for selectively attaching itself to one of a plurality of RF base stations. Each of these base stations has an associated cost, a preset priority, and a preset number. The remote terminal receives a message from each base station and discards those which fall below a predetermined minimum threshold level.

The remote terminal will attach itself to one of the plurality of base stations based on the cost, signal strength, preset priority, and preset number.

Additionally, these and other objects are achieved in a method for selecting and redundantly replacing a root device when it breaks down from among a plurality of potential root devices. Each of the potential root devices has a single, assigned preset number. The potential root device with the lowest assigned preset number is initially selected. Whenever the selected root device breaks down, one of the potential root devices will be selected based on the lowest assigned preset number without considering the preset number of the currently selected root device.

BRIEF DESCRIPTION OF THE DRAWINGS

FIG. 1 is a diagram which illustrates the basic communication pathways and spatial relationships between a host computer, base stations and roaming terminals of the present invention;

FIG. 2 is a timing diagram illustrating several possible communication exchanges between any base station and roaming terminal of FIG. 1;

FIG. 3 is a detailed view of a portion of the timing diagram shown in FIG. 2 which illustrates the interframe gap blocking function; and

FIG. 4 is a block diagram of a redundant communication interface between several base stations and host computers of the present invention.

FIG. 5 illustrates the relationship between devices, nodes, terminal access points (TAP), network interface points (NIP) and network routing functions (NRF).

FIGS. 6 and 7 illustrate how physical devices are organized into logical nodes in a spanning tree.

FIG. 8 illustrates one example of direct routing used in the preferred embodiment.

FIG. 9 illustrates the SST Multi-drop LAN using "linear" topology.

FIG. 10 demonstrates how wireless routing can reduce the amount of wiring in a warehouse facility.

DESCRIPTION OF THE PREFERRED EMBODIMENT

FIG. 1 is a diagram which illustrates the basic communication pathways and spatial relationships between a host computer, base stations and roaming terminals of the present invention. Particularly, a host computer 11 and roaming terminals 13, 15 and 17 indirectly communicate through base stations 19 and 21. The base stations 19 and 21 receive communications via one link medium and relay those communications along another. Particularly, a "hard-wired" connection such as an IEEE 802.3 (ethernet) interface provides a link 23 to host computer 11, while radio frequency (RF) transmission provides the link to the roaming terminals 13, 15 and 17.

If the remote terminals 13, 15 and 17 are within the RF range of each other, they can use direct RF transmission as the link. If they are not within RF range, an indirect communication link must be found through the base stations 19 and 21. The RF range of the base stations 19 and 21 is illustrated in FIG. 1 by the respective circular boundaries 25 and 27. The boundaries 25 and 27 represent the maximum radial distance from the base stations 19 and 21 that RF communications can be maintained.

In one preferred embodiment, the host computer 11 can be either an IBM AS400 or 3090 mainframe. The base stations 19 and 21 are NORAND RB4000 products and the roaming terminals 15, 17 and 19 are NORAND RT1100 products.

Although only one host computer, two base stations and three roaming terminals are shown for simplicity, the use of additional host units, many more base stations and hundreds of roaming terminals are contemplated. Instead of the "hard-wired" ethernet interface, it is also contemplated that the entire link 23, or any portion thereof, can be maintained using RF transmissions. In such situations, because of the range limitations associated with an RF link, it may be necessary for several base stations to relay communications between the host computer 11 and the roaming terminals 13, 15 and 17. Alternatively stated, the communications "hop" from one base station to the next until the destination is reached.

As the number of base stations increases, the number of possible "hopping" pathways also increases. A backward-learning, spanning tree algorithm is used to select the "hopping" pathway with the lowest "cost" to a given destination. A detailed description of this algorithm can be found in application U.S. Ser. No. 07/769,425, entitled "A RADIO FREQUENCY LOCAL AREA NETWORK" filed Oct. 1, 1991, now abandoned (subsequent continuation application issued as U.S. Pat. No. 5,295,154) in the names of Meier et al., which is incorporated herein by reference. Basically to summarize, a "cost" is assigned to every direct communication link in the network. This "cost" factor takes into account the communication bandwidth of a particular link. Next, the spanning tree algorithm using backward learning identifies the "hopping" pathway of lowest "cost" from any source to any destination. Whenever any direct link is faulty or a "hopping point" (a base station for example) is moved or breaks down, an alternative low "cost" pathway can be used. This provides an inherent redundancy to the network.

Referring back to FIG. 1, roaming terminals 15, 17 and 19 collect data that must be communicated to the host computer 11. This data is collected either via respective bar code readers 29, 31 and 33 or keyboards 35, 37 and 39. U.S. Pat. Nos. 4,910,794; 4,924,462; and 4,940,974 provide a further description of these readers and data collection. The terminals 15, 17 and 19 can also request information from the host computer 11 or from other roaming terminals. Similarly, the host computer 11 may desire to communicate with the roaming terminals 15, 17 and 19 in order to download configuration information, database information or to send commands.

Before communication can be initially established, the roaming terminals 13, 15 and 17 must first listen for hello-messages from the base stations 19 and 21. The base station 19 and 21 both send out hello-messages approximately once every second. The hello-messages identify the sending base station along with its current loading and associated "cost".

The roaming terminals 13, 15 and 17 attempt to detect every possible hello-message from any base station within range. This requires that the hello-message listening period be at least as long as the maximum time between hello-messages sent by any single base station. For example, the terminals 13 and 17 would respectively receive a hello-message from the base stations 19 and 21, while the terminal 15 would receive two hello-messages: one from the base stations 19 and one from the station 21. Only those hello-messages that meet a minimum "signal strength" threshold are further considered. All weaker hello-messages are ignored.

As spatially represented in FIG. 1, upon receiving hello-messages from a single base station, the roaming terminals 13 and 17 can immediately initiate communication with the host computer 11 by "attaching" to their respectively identified base stations 19 and 21. The roaming terminal 15, however,

which received two sufficiently strong hello-messages signals, must select either base station **19** or **21** before "attaching".

To make this selection, the roaming terminal **15** must initially consider the "cost". Specifically, terminal **15** must select the base station which has the lowest "cost". If the "costs" are equal, terminal **15** must select the base station whose received hello-message has the highest "signal strength". If the corresponding "signal strengths" also prove to be equal, the roaming terminal **15** selects the base station with the highest user defined "priority". This priority can be preset by the user based on both the spatial layout and the nature of the components being used. Finally, if these factors all prove equal, the terminal **15** merely selects the base station with the lowest "preset number". Each base station is randomly assigned a unique "preset number" upon its manufacture or during its installation onto the network.

Assuming that station **19** and **21** have the same "cost" and "signal strength" but that station **19** has the highest user defined "priority", gravitation in the overlapping region occurs toward the base station **19**. In this way, the base station **19** can better regulate communication in the overlapping RF regions with minimal channel contention.

More particularly, the user set "priority" assigned to a base station could also be determined based on the spatial layout of competing base stations. The higher "priority" base stations can be surrounded by lower "priority" base stations and vice versa in a pattern defined by the total area being covered so as to cause as much migration as possible onto the higher "priority" base stations and away from the lower "priority" base stations. Similarly, in determining high "priority", consideration can also be given to the base stations ordinarily containing high concentration of roaming terminals.

It is further contemplated that factors which indicate the current load on base stations **19** and **21** could also be considered in the selection by the roaming terminal **15**. First, if heavy loading is considered a negative factor, the roaming terminals **13**, **15** and **17** that pass within the overlapping region defined by boundaries **25** and **27** would gravitate toward base stations with the lightest load. Although this balances the loading between base stations, it causes greater channel contention problems in the overlapping regions. Second, if heavy loading is considered a positive factor, the roaming terminals would gravitate toward base stations with the heaviest load. In this manner, a heavily loaded base station could better manage communication when surrounded by lightly loaded stations.

As roaming terminals **13**, **15** and **17** move within the confines of boundaries **25** and **27**, they often need to re-evaluate their base station selection. Instead of waiting until RF communication with their selected base station is entirely lost, the remote terminals **13**, **15** and **17** can periodically re-evaluate the "cost" and "signal strength" of either the hello-messages or any other RF transmission sent from other base stations. Upon selecting a new base station, the roaming terminals merely "attach" to their new selection. Furthermore, in addition to or in place of this periodic re-evaluation described in the preferred embodiment, a decline in the selected base station's "signal strength" might also be used as a factor for initiating a re-evaluation.

FIG. **2** is a timing diagram illustrating several possible communication exchanges between any base station and roaming terminal of FIG. **1**. For example, with specific reference to exchange (a), when roaming terminal **13** desires to communicate with the host **11** through the selected base station **19**, the terminal **13** merely listens for a clear channel using a standard collision-sense multiple access (CSMA) approach and transmits a request for poll (RFP) frame **51**. The base station **19** chooses to immediately respond by transmitting a polling (POLL) frame **53**. This POLL frame **53** indicates to the terminal **13** that the channel is currently clear to send data. The terminal **13** sends data in frames of a preset size. If the frame size is smaller than the total block of data to be transmitted, multiple frames must be sent. In exchange (a), for example, three frames of data (DATA frames) **55**, **59** and **63** are required to transmit the entire data block.

In response to the POLL frame **53**, the terminal **13** sends the first DATA frame **55**. A field in each DATA frame is used to indicate either that more DATA frames follow or that the current DATA frame is the last. A DATA frame containing the later indication is called an end of data (EOD) frame. Because the DATA frame **55** is not the EOD frame, the base station **19** expects more data to follow and sends a POLL frame **57**. The terminal **13** again responds by sending the DATA frame **59**, and again, base station **19** responds with another POLL frame **61**. Although not shown, this process can repeat until the EOD frame is encountered. Upon receiving the EOD frame **63**, the base station **19** realizes that no further data needs to be transmitted. Instead of sending another POLL frame, the station **19** sends a channel clear (CLEAR) frame **65** and forwards the data toward the host computer **11**.

The standard CSMA protocol described in exchange (a) above only requires that the roaming terminal **13** listen long enough to identify an "apparently clear channel" before sending an RFP frame. This does not require that the channel be truly clear, however. To clarify this distinction, although the terminal **13** can easily determine that the base station **19** is not transmitting to the roaming terminal **15**, it may be impossible for terminal **13** to determine whether the terminal **15** is transmitting to the base station **19**. This impossibility is based on the limited RF range of the roaming terminals **13**, **15** and **17**. As shown in FIG. **1**, because of their separation, the terminal **15** appears "hidden" to the terminal **13**. Using the standard CSMA approach, the RFP frames sent out after identifying an "apparently clear channel" collide with "hidden" ongoing communications. During a period of light communication traffic ("lightly loaded conditions") on a given base station, such collisions prove to be statistically infrequent and thus pose no serious problems.

Under heavily loaded conditions, because such collisions prove to be statistically more frequent, a modified CSMA approach is used. This modified approach requires that the roaming terminals identify a "truly clear channel" before transmitting an RFP frame. This is accomplished by extending the up-front listening period of the roaming terminals to be slightly greater than the maximum possible time span between POLL or CLEAR frames (herein designated the "interpoll gap"). Referring specifically to FIG. **1** and exchange (b) in FIG. **2**, the terminal **13** listens for an interpoll gap time **67**. By listening through the entire interpoll gap time **67**, even though the terminal **13** cannot directly identify an ongoing transmission from the "hidden" terminal **15** to the base station **19**, the terminal **13** indirectly concludes that such a communication has not taken place. This conclusion is based on the failure to receive a POLL or CLEAR frame directed to the "hidden" terminal **15** from the base station **19**. Had such a POLL or CLEAR frame been received during the interpoll gap time **67**, the terminal **13** would have concluded that a "hidden" communication had been ongoing. Thus, the terminal **13** would transmit an RFP frame only after a CLEAR frame was received.

Upon identifying a "truly clear channel", the communication exchange (b) is identical to that of exchange (a) described above. To summarize, the terminal **13** sends an RFP frame

and base station **19** responds with POLL frames **71**, **75** and **79** which respectively initiate DATA frames **73** and **77** and an EOD frame **81**. Upon receiving the EOD frame **81**, the base station **19** sends a CLEAR frame **83** and enters a dormant, listening state.

Based on the communication traffic, the base stations **19** and **21** determine individually whether they are lightly or heavily loaded. Although this loading status is transmitted to the remote terminals in a reserved field of each hello-message, it is contemplated that this reserved field might also be placed within every POLL and CLEAR frame. Upon receiving the loading status, the roaming terminals **13**, **15** and **17** can appropriately choose either the standard or modified CSMA listening period protocol.

Although in exchanges (a) and (b) the base station **19** responded immediately to the roaming terminal **13** with POLL frames, this need not be the case. In fact, the base station **19** may decide to service the remote terminal **13** at some other time. Exchange (c) demonstrates this control. As shown, the terminal **13** sends an RFP frame **85**. In response, the base station **19** decides to send a wait for poll (WFP) frame **87**. This informs the terminal **13** that the base station **19** received the RFP frame **85** and will poll at some later time. The terminal **13** thereafter remains silent, awaiting a POLL frame **89**. When the base station **19** sends the POLL frame **89**, the terminal **13** responds by transmitting a DATA frame **91**. This is not an EOD frame therefore even though another POLL frame could be sent to retrieve the remaining DATA frames, the base station **19** decides to send another WFP frame **93**. Again terminal **13** waits. At some time later, the base station **19** continues the data transfer by sending a POLL frame **95**. The terminal **13** immediately responds with an EOD frame **97**. Finally, the base station **19** sends a CLEAR frame signifying the channel is clear.

Exchange (d) illustrates the circumstance involving an incorrectly received DATA frame. Specifically, after sending an RFP frame **101** and receiving a POLL frame **103**, the roaming terminal **13** attempts to send a first data frame during a time period **105** to the base station **19**. This first data frame is not correctly received so base station **19** responds by sending a POLL frame **107** which requests that the previously sent data frame be repeated. The terminal **13** responds by resending the first data frame during a time period **109**. This time, the base station **19** properly receives the first data frame and sends a POLL frame **111** requesting the next DATA frame. The terminal **13** responds by attempting to send the last DATA frame, the EOD frame, during a time period **113**. The base station **19** responds to the incorrect reception by sending a further POLL frame **115**. The terminal **13** resends the EOD frame during time period **117** which is properly received by the base station **19** and a CLEAR frame **119** completes the communication exchange.

In exchange (e), after a successful exchange sequence of an RFP frame **121**, a POLL frame **123**, a DATA frame **125** and a POLL frame **127**, communications break down. The terminal **13** responds to the POLL frame **127** by sending an EOD frame **129** but receives no responsive CLEAR frame. Either the EOD frame **129** was not received and a POLL frame requesting a resend was lost, or the EOD frame **129** was correctly received and a CLEAR frame was lost. To determine which, the terminal **13** sends an enquiry frame (ENQ) **131** to the base station **13**. The base station **19** responds by sending a CLEAR frame during time period **133** indicating that a previously sent CLEAR frame must have been lost. Alternatively, if no response is detected in time period **133**, the terminal **13** resends an ENQ frame **135**. The base station **19** responds in a time period **137** with a POLL or WFP frame signifying that the EOD frame **129** has been lost.

The description of the communication protocol from the roaming terminals **13**, **15** and **17** and base stations **19** and **20** relating to FIG. **2** above applies equally to communications in the reverse direction. Similarly, communications from the base stations **19** and **20** toward the host computer **11** are also governed by this protocol. One difference exists, however. For the portions of link **23** which are hard wired (such as an ethernet interface), the segmentation of data into fixed frames is not needed. Therefore, after receiving a series of data frames (hereinafter called a "bracket of frames"), the base stations **19** and **20** will recombine the data into one complete block for transmission along hardwired portions of link **23**.

FIG. **3** is a detailed view of a portion of the timing diagram shown in FIG. **2** which illustrates the interframe gap blocking function. Specifically, if the roaming terminal **13** desires communication with the selected base station **19**, the terminal **13** initiates communication by transmitting an RFP frame **151**. Prior to the completion of this transmission, the base station **19** responds by transmitting a POLL frame **153**. In turn, prior to the completion of this transmission, the terminal **13** begins transmitting an EOD frame **155**. Similarly, prior to full receipt of this EOD frame **155**, the base station **19** sends a CLEAR frame **157**. In this manner, the channel will remain "busy" during the entire communication exchange. Thus, during lightly loaded conditions, when the roaming terminals **15** and **17** are within RF range of such an exchange, they will not be able to find a "apparently clear channel" and therefore will not cause collisions by sending untimely RFP frames.

More specifically, the RFP frame **151** is further divided into information fields **159** and end of frame fields **161**. The POLL frame **153** is divided into beginning of frame fields **163**, information fields **165** and end of frame fields **167**. Similarly, the EOD frame **155** is further divided into beginning of frame fields **169**, information fields **171** and end of frame fields **173**. Finally, the CLEAR frame is divided into beginning of frame fields **175** and information fields **177**. These overlapping end of frame and beginning of frame fields "block" the channel from being misinterpreted as being "clear".

For example, the terminal **13** begins to transmit the RFP frame **151** to the base station **19**. As soon as the beginning of the field **161** is detected, the base station **19** immediately responds with the field **163** of the POLL frame **153**. It does not matter that fields **161** and **163** overlap because they carry no other information than to ensure that the channel will be "blocked". The interaction of fields **161** and **163** applies equally to the overlapping fields **167** and **169** and fields **173** and **175**.

FIG. **4** is a block diagram of a redundant communication interface between several base stations and host computers of the present invention. In this embodiment, a host computer **201** is redundantly backed-up by a dormant host computer **203**. If the host computer **201** fails, the dormant host computer **203** which monitors the host computer **201** identifies the failure and takes over. Similarly, base stations **205**, **207**, **209**, **211**, **213** and **215** are redundantly backed-up by dormant base stations **217**, **219**, **221**, **223**, **225** and **227**, respectively. A communication link **229** which may consist in whole or in part of a hard-wired or RF link provides the communication pathway between these host computers and base stations.

FIG. **7** depicts the same devices organized as nodes on branches of a spanning tree.

Also providing redundancy, the "root" base station, as defined by the spanning tree, is selected by the "preselect number" (described in reference to the attaching criterion

related to FIG. 1 above). The non-dormant base station with the highest "preselected number" is initially designated to be the spanning tree "root". If that base station subsequently fails, either the corresponding dormant base station can take over the full functionality of the "root", or the non-dormant base station with the next highest "preselected number" can be designated as the new "root". In this manner, spanning tree redundancy is maintained.

In an alternate preferred embodiment, an SST (Spread Spectrum Terminal) network is used implements a hierarchical radio frequency network of, potentially roaming terminals used primarily for online data entry and occasionally for batch file transfers. The network is characterized by sporadic data traffic over multiple-hop data paths consisting of RS485 or ethernet wired links and single-channel direct-sequenced, spread-spectrum radio links. The network architecture is complicated by moving nodes, hidden nodes, sleeping nodes, transient radio links, and unidirectional radio links.

The SST network consists of the following types of devices: 1) hosts; 2) controllers, 3) base stations; and 4) terminals. A "host" or host computer, communicates with terminals in the SST network. A "controller" is a gateway which passes messages between the host and the terminals. A "base station" device is used as an interior node for extending the range of a controller. Base-station-to-controller or base-station-to-base-station links can be maintained either with hard-wired or radio communication. A "terminal" i.e., a Norand hand-held computer, printer, etc., interfaces through the SST network to the host via interior nodes.

The terminals, controllers, hosts and base stations are logically organized as nodes in an optimal spanning tree with a controller as the root node, internal nodes in base stations or other controllers on branches of the tree, and terminal nodes as possibly roaming leaves on the tree. With the exception of the root node, each child node is connected by a single logical link to a parent node. Like a sink tree, nodes closer to the root of the spanning tree are said to be "downstream" from nodes which are further away. Conversely, all nodes are "upstream" from the root. Packets are only sent along branches (i.e., logical links) of the spanning tree. Nodes in the network use a "backward learning" technique to route packets along branches of a spanning tree.

Devices in spanning tree are logically categorized as one of the following three node types: 1) roots; 2) bridges; or 3) terminals. A "root" is a controller device which functions as the root bridge of the network spanning tree. The spanning tree has a single root node. Initially, all controllers are root candidates. One and only one root node is determined for each autonomous network by using a priority-based root selection algorithm.

A "bridge" is an internal node in the spanning tree which is used to "bridge" terminal nodes together into an interconnected network. The root node is a bridge, and the term "bridge" may be used to refer to all non-terminal nodes or all non-terminal nodes except the root depending on the context. A bridge node consists of a network interface point and a routing function.

A "terminal" is a leaf node in the spanning tree. A terminal node can be viewed as the software entity that terminates a branch in the spanning tree. A terminal node consists of a network interface point and one or more terminal access points.

A controller device contains a terminal node(s) and a bridge node. The bridge node is the root node if the controller is functioning as the root bridge. A base station contains a bridge node. A base station does not contain a terminal node; a terminal device contains a terminal node. Additionally, a bridging entity refers to a bridge node or to the network interface point in a terminal device.

Network interface points are single network addressable entities which must exist in all nodes. A network interface point is equivalent to the software entity which is used to interface the SST network to a device or bridging node. Note that a controller device connected to a host computer a network interface point which references the host computer and a second discrete network interface point which references the bridging node in the controller. Each network interface point is identified by a unique network address. Unless otherwise specified, this document uses "network address" or simply "address" to refer to the identifier of a network interface point. Moreover, multiple network interface points may be referenced with multicast and broadcast addresses.

Terminal access point refers to a higher layer access point into the network. A terminal access point is defined by the concatenation of the network interface point address and the terminal access point identifier. A terminal device or controller device can have multiple terminal access points.

A logical port is defined by a physical port and a network interface point. This implies that a single device may have more than one physical port with the same network address. In this document "port" refers to a logical port.

A controller device **301** has two NIP's **303** and **305**. As an example, the NIP **303** in a controller's terminal node **307** is equivalent to the software entity which interfaces to a host computer. Two TAP's **309** and **317** attached to that NIP identify discrete applications (i.e., terminal emulation and file transfer applications directed to the host computer). A base station **313** has a NIP **315** and a NRF **317**, while terminals **319** and **321** have TAP's **323** and **325** and NIP's **327** and **329**.

This network environment involves the following characterization features: 1) wired or wireless node connections; 2) network layer transparency; 3) dynamic/automatic network routing configuration; 4) terminals can move about the radio network without losing a data link connection; 5) ability to accommodate sleeping terminals; 6) ability to locate terminals quickly; 7) built-in redundancy; and 8) physical link independence (i.e., higher layer protocols must be consistent across heterogeneous physical links).

This SST network is functionally layered with a MAC (Medium Access Control) layer, bridging layer, data link or transport layer, and higher layers. The MAC layer is responsible for providing reliable transmission between ports on any two devices in the network (i.e. terminal-to-base station). The MAC has a channel access control component and a link control component. The two components are equivalent to the TSO media access control and data link control sublayers, respectively. The link control component facilitates reliable point-to-point frame transfers in the absence of collision detection and in the presence of errors.

A polling protocol is used to restrict contention to request-for-poll (RFP) frames thus minimizing contention for data frames. This protocol uses several channel access control algorithms to regulate access to the communications channel. The algorithms are link-type dependent and incorporate a random backoff algorithm to prevent deadlock and instability in contention situations. Specifically, a p-persistent CSMA/CA (carrier sense multiple access with collision avoidance) protocol is used to gain access to an RS485 LAN. The collision avoidance scheme gives channel access priority to the recipient of a unicast frame. On lightly loaded spread spectrum radio links, a non-persistent CSMA algorithm is used to gain access to the communications channel. Under moderate to heavy channel utilization, an LBT/DP (listen-before-talk

with busy pulse) algorithm is used to gain access to the channel and minimize the effect of hidden nodes.

This bridging layer routes packets from terminals to the host, from the host to terminals, and from terminals to terminals along branches of the spanning tree. To accomplish this, the bridging layer uses a "HELLO protocol" to organize nodes in the network into an optimal spanning tree rooted at the root bridge. The spanning tree is used to prevent loops in the topology. Interior branches of the spanning tree are relatively stable (i.e. controllers and relay stations do not move often). Terminals, which are leaves on the spanning tree, become unattached and must be reattached, frequently. Additionally, the bridging layer also: 1) maintains spanning tree links; 2) propagates lost node information throughout the spanning tree; 3) distributes network interface addresses. 4) organizes nodes into logical coverage areas on radio channels; and 5) The bridging layer provides a service for storing packets for SLEEPING terminals. Packets which cannot be delivered immediately can be saved by the bridging entity in a parent node for one or more HELLO times.

The data-link layer provides an end-to-end data path between data-link access points in any two nodes in the network. The data-link layer provides a connection-oriented reliable service and a connectionless unreliable service. The reliable service detects and discards duplicate packets and retransmits lost packets. The unreliable service provides a datagram facility for upper layer protocols which prove a reliable end to end data path. This layer provides services (ISO layer 2) for terminal-to-host application sessions which run on top of an end-to-end terminal-to-host transport protocol. However, the data-link layer provides transport (ISO layer 4) services for sessions contained within the SST network.

For terminal-to-terminal sessions contained within the SST network, the data-link layer provides transport layer services and no additional network or transport layer is required. In this case, the MAC, bridging, and data-link layers discussed above can be viewed as a data-link layer, a network layer, and a transport layer, respectively. For terminal-to-host-application sessions, higher ISO layers exist on top of the SST data-link layer and must be implemented in the terminal and host computer as required.

MAC frames contain a hop destination and hop source address in the MAC header. Bridging packets contain an end-to-end destination and source address in the bridging header. Data-link headers contain source and destination access point identifiers. A data-link connection is defined by the concatenation of the bridging layer source and destination address pairs and the destination and source data-link access points. One end of a connection is equivalent to a terminal access point and is specified as <access_point>@<network_address>, where aliases can be used for both. MAC and bridging addresses are consistent and have the same format.

All devices must have either a unique long identifier which is programmed into the device at the factory and/or an alias which is entered by the user or is well-known. The long address/alias is only used to obtain a short network address from the root node. A network address uniquely identifies the network interface point in each node. This network address is obtained from an address server in the root. The network interface point passes the network address to the MAC entity attached to each port on a device. Short addresses are used to minimize packet sizes.

A network address consists of a node type and a unique multicast, or broadcast node identifier. A node type identifier of all 1's is used to specify all node types while all 0's specifies a root address. Particularly, node identifier of all 1's is the default node identifier used until a unique node identifier is obtained.

In addition to source and destination addresses, each network packet contains a spanning tree identifier in the MAC header. A default spanning tree identifier is well-known by all nodes. A non-default spanning tree identifier can be entered into the root node (i.e., by a network administrator) and advertised to all other nodes in HELLO packets. The list of non-default spanning trees to which other nodes can attach must be entered into each node. A global spanning tree identifier is also well-known by all nodes, and is reserved for the identify of a spanning tree to which all nodes can attach.

The network node identifier of a root node is always all 0's and is well-known. All other nodes must obtain a unique network node identifier from a (RARP) Reverse Address Resolution Protocol server in the root node. A node identifier of all 1's is used until a unique identifier is obtained. To get a unique identifier, a node must send a RARP request packet to the RARP server. This packet contains the requesting node's unique long identifier and/or an alias for the long identifier. A network address is returned to the requesting node in a RARP response packet.

Nodes must obtain a new network address whenever a new root node is discovered and whenever an ADDRESS-TIMEOUT inactivity period expires without the node receiving a packet from the bridging entity in the root. A node can prevent its address from expiring by sending an empty ATTACH.request packet to the root.

The address server in the root associates an age factor with each allocated network address. The age factor is incremented each time an ADDRESS-TIMER expires. The age factor is reset to zero ("0") whenever the address is used. An address is available for use by a requesting node if it has never been used or if it has been inactive for a MAX-ADDRESS-LIFE timer period. MAX-ADDRESS-LIFE must be larger than ADDRESS-TIMEOUT to ensure that an address is not in use by any node when it becomes available for another node. If the root receives a RARP request packet from a source for which an entry exists in the address queue, the root simply resets the age factor to zero and returns the old address.

More specifically, the bridging layer organizes nodes into an optimal spanning tree with a single root bridge at the root of the tree. The spanning tree identifier allows more than one logical tree to exist in the same coverage area. Spanning tree organization is facilitated with a HELLO protocol which selects a root node and enables nodes to determine the shortest path to the root before attaching to the spanning tree. All messages are routed along branches of the spanning tree. Restricting each node to a single parent guarantees that there will be no loops in the logical topology.

Nodes in the network are generally categorized as "attached" or "unattached". Initially, only the root is attached. A single controller may be designated as the root or multiple root candidates (other controllers) may negotiate to determine which node is the root.

Attached bridge nodes are root candidates transmit HELLO packets at calculated intervals. The HELLO packets include:

1) the source address;

2) a broadcast destination address;

3) the distance (cost) to the root;

4) a "seed" value used to calculate the time of the next HELLO packet;

5) a hello slot displacement which specifies the displacement of the actual hello slot time from the calculated hello slot time or to indicate that the hello time was not calculated (i.e. was unscheduled);

6) a spanning tree identifier (LAN ID);

7) the priority of the root node (or root candidate);

8) the long, unique device identifier of the root node (or root candidate);

9) descendent count (optional);

10) a pending message list (optional); and

11) a detached-node list.

When desirable, terminals may discontinue its monitoring of the communication channel by going to sleep. Pending messages for these SLEEPING terminals are stored in lists in the parent node which include the network address for accessing the listed SLEEPING terminals.

Detached-node lists are also maintained to enable the spanning tree algorithms. These lists contain the addresses of nodes which have detached from the spanning tree. Each internal node learns which entries should be in its detached-node list from DETACH packets which are broadcast by internal nodes when a child is lost. Entries are also included in HELLO packets for DETACH-MSG-LIFE hello times.

Attached nodes broadcast short HELLO packets immediately if they receive an ATTACH.request packet with a global destination address; otherwise, attached nodes only broadcast HELLO packets at calculated time intervals in "HELLO-slots". Short HELLO packets do not contain a pending-message, long-root identifier, or a detached-node list. Short HELLO packets are set independently of regular HELLO packets and do not affect regular hello timing. The end-to-end ATTACH.request functions as a discovery packet, and enabling nodes in the path to the root node to quickly learn the address of the source node.

Unattached nodes (nodes without a parent in the spanning tree) are initially in an UNATTACHED state. During the UNATTACHED state, a node learns which attached bridge is closest to the root node by listening to HELLO packets. After the learning period expires an unattached node sends an ATTACH.request packet to the attached node closest to the root. However, nodes without a network address must first send a RARP.request packet to the root to obtain a network address. The attached node adopts the unattached node as a child by acknowledging the ATTACH.request packet and forwarding it on to the root node. The root node returns the request as an end-to-end ATTACH.confirm packet if a response packet required (RPRQ) flag is set. If the newly attached node is a bridge, it calculates its distance to the root, by adding its link distance to the total distance of its new parent, and begins to transmit HELLO packets.

The UNATTACHED learning state ends after HELLO-RETRY hello time slots if HELLO packets have been received from at least one node. If no HELLO packets have been received the listening node waits (i.e. sleeps) and retries later.

An attached node may respond to a HELLO packet from a node other than its parent (i.e. with an ATTACH.request packet) if the difference in the hop count specified in the HELLO packet exceeds a CHANGE-THRESHOLD level. Only attached bridges or the root may respond to an ATTACH.request packet. Unattached nodes may broadcast a global ATTACH.request with a multicast bridge destination address to solicit short HELLO packets from attached bridges. The net effect is that the UNATTACHED state may optionally be shortened. Normally, this facility is reserved for terminals with transactions in progress.

ATTACH.request packets contain a "count" field which indicates that a terminal (i.e. which sent the request) may be SLEEPING. The bridging entity in the parent of a SLEEPING terminal can temporarily store messages for later delivery. If the count field is non-zero, the bridging entity in a parent node stores pending messages until the message is delivered, or the "count" hello times have expired. ATTACH-.request packets may also contain a decedents list so that an internal node may attach itself and the subtree under it (i.e., to a bridge node closer to the root). In addition, data-link layer data can be piggy-backed on an ATTACH.request packet from a terminal Attached nodes forget their network address and return to the UNATTACHED state whenever a HELLO packet is received with a new root node identifier.

The incremental portion of the distance between a node and its parent is primarily a function of the physical link type (i.e. ethernet, RS485, or radio communication). On radio communication links, bridging connections are biased toward the link with the best signal strength. Signal strength is not a factor in the cumulative path distance. The distance component is intended to bias path selection toward high-speed (i.e. wired) connections. On wired links, the weighted distance is the only criteria for choosing a parent.

Specifically, on radio links, a parent is chosen based on the following criteria: 1) the signal strength must exceed a minimum threshold value; 2) if two potential parent nodes are at a different distance from the root, the one with the least distance is chosen; 3) if two potential parent nodes are at the same distance, the node with the best signal strength is chosen; and 4) if two potential parent nodes are at the same distance and have the same signal strength, then the node with the lowest address is chosen. The intent of the above criteria is to create stable disjoint logical coverage areas in the presence of physically overlapping coverage areas. Ideally, all radio terminals in a coverage area will be attached to a single bridge node.

The concept of disjoint logical coverage areas is especially important when radio bridge nodes are placed in close proximity to provide redundant coverage for protection against a failure. The MAC entity in one of the bridge nodes can efficiently regulate access to the channel by queuing terminals for polling without coordination with other co-located bridge nodes.

All packets are routed along branches of the spanning tree. Bridges "learn" the address of terminals by monitoring traffic from terminals to the root. When a bridge receives a packet directed toward the root, the bridge creates or updates an entry in its routing table for the terminal. The entry includes the terminal address and the bridge address which sent the packet. The latter address is called the hop source address. When a bridge receives an upstream packet moving from the root toward a terminal the packet is forwarded to the upstream node which is specified in the routing entry for the destination.

Upstream packets are discarded whenever a routing entry does not exist. Downstream packets are simply forwarded to the next downstream node in the branch of the spanning tree. No explicit routing is required for downstream traffic because the route is defined by the structure of the spanning tree. A packet travels downstream until a node is reached which has an entry in its routing table for the destination address. The packet is then explicitly accomplished by routing all traffic through the nearest common ancestor of both terminals. In the worst case, the root is the nearest common ancestor. Additionally, an address resolution server in the root node facilitates terminal-to-terminal communications.

Referring back to the exemplary configuration shown in FIG. 7, if a terminal **417** sends a packet to a terminal **403**, the

packet follows the downstream hops from the terminal **417** through a base station **407**, through a base station **405**, to a node, **401** and to a root node **404**. Routing tables are not required for the downstream hops. The routing function at the root node **404** has an entry for the terminal **403** in its routing table which specifies the terminal **403** as the first upstream hop to terminal **403**. Therefore, the packet is explicitly routed upstream to the terminal **403**.

As a second example, if terminal **419** sends a packet to terminal **417**, the packet follows one downstream hop from the terminal **419** to the base station **405**. The routing function at the base **405** has an entry for the terminal **417** in its routing table which specifies the base **407** as the first upstream hop to the terminal **407**. The packet is routed upstream to the base **407**. An entry in the routing table at the base **407** specifies the terminal **417** as the first upstream hop to the terminal **417**, and the packet is thus routed.

As an extension to the routing algorithm described above, terminals may optionally cache the addresses of neighbors in a separate direct route table. If a terminal has a message for a destination listed in its direct route table, it may transmit it directly to the source node. Note that the packet may not follow a branch of the spanning tree. Direct-route table entries are "aged" relatively quickly. If a direct transmission fails, the entry in the direct-route table is discarded and the packet is simply forwarded downstream to the root. The header format filed in the bridge header must be set to point-to-point for directly transmitted packets. Direct routing has obvious advantages; however, it forces terminals to maintain additional MAC layer state information.

As an example of direct routing, in FIG. **8**, a terminal **425** can route packets directly to a terminal **427**, if the terminal **425** has an entry for the terminal **427** in its direct routing table. The direct routing table in a node is built by listening to traffic directed to other nodes. If the MAC layer screens such traffic from the bridging layer, the direct routing table must be built by the MAC layer.

Paths in the spanning tree can change for a number of reasons. First, any node may select a new path to the root if the distance of its parent from the root is CHANGE-THRESHOLD greater than the distance in a HELLO packet from another node where CHANGE_THRESHOLD can be as small as one ("1"). A node on a radio channel should always choose for its parent the node with the best signal strength, and, all else being equal, the node with the lowest address. A node can move its entire subtree by including a decedents list in the ATTACH.request packet sent to the new parent. Rapidly moving terminals can also cache a short list of alternate parents. Periodically, SLEEPING terminals stay awake for at least one full HELLO to HELLO period to discover changes in the network topology.

Second, a parent node detaches the subtree rooted at a child node whenever a message cannot be delivered to the child. This occurs when the MAC layer in a parent node fails to deliver a unicast bridging layer packet to a child node. In addition, the bridging entity in a parent node can retain messages for a child terminal node. Terminals request the save messages by sending a DATA-REQUEST.request packet to the parent. If the message is not requested and delivered after a predetermined number of HELLO periods, the terminal is detached. If the detached node is a bridging node, the parent node sends a DETACH.request packet to the root node which contains a decedents list that defines the lost subtree. If the detached child is a terminal, the parent floods a DETACH.request throughout all branches of the spanning tree using a reliable broadcast mechanism. The detached node information which is broadcast in flooded DETACH.request packets is added to the detached-node-set maintained in each bridge node. Each entry in the set has a HELLO-count associated with it. If an entry in the detached node list of a DETACH.request packet already exists in a bridge's detached-node-set, the associated HELLO-count filed is reset to zero ("0"). The detached-node-set is copied into the detached-node-list in the bridge's HELLO packets. The HELLO-count field for each entry is incremented after each HELLO is transmitted. Entries whose hello-count field exceeds a predetermined HELLO-value are deleted.

Third, a child node goes into state whenever its MAC layer fails to deliver a message to its parent. If the child node is a bridge, it continues to broadcast scheduled HELLO packets with an infinite distance for a time greater than that defined by the HELLO-value (HELLO-retry+1 time). If the child node is a terminal, it may solicit short HELLO packets to shorten the UNATTACHED state. The UNATTACHED learning state has expired the node reattaches by transmitting an ATTACH.request to the bridge node closest to the root.

Fourth, if a node in an ATTACHED state receives a DETACH packet or a HELLO packet with its network address in the detached-node-list, it must enter the UNATTACHED state and reattach to the spanning tree. Additionally, a node can shorten the UNATTACHED state by soliciting short HELLO packets. After reattaching, the node must remain in a HOLD-DOWN state for HELLO+1 time. During the HOLD-DOWN state, the node ignores its address in DETACH packet and HELLO packet detached-node-lists. After the HOLD-DOWN period expires, the node sends a second ATTACH.request to the root to ensure that it is still attached.

Fifth, entries in routing tables are aged. When routing table space for a new entry is required, either an unused entry or the oldest (i.e. least recently used) entry is selected. If a used entry is selected, the old information is simply discarded. The aging factor associated with each table entry is reset to zero ("0") each time a new packet from the associated node arrives. In the absence of a regular data traffic, a node must periodically send an ATTACH.request packet to the root node to maintain its path in the spanning tree.

Sixth, a node enters the ATTACHED-LISTEN state whenever two HELLO packets from its parent are missed. SLEEPING terminals remain awake during the ATTACHED LISTEN state. This state ends when the node receives a data or HELLO packet from its parent. The node enters the UNATTACHED state when either its address appears in the detached list if a DETACH or HELLO packet or a total of HELLO-RETRY−1 consecutive HELLO packets are missed. The time that a node spends in the ATTACHED-LISTEN state is less than the lifetime of detached node information in the network. This ensures that a detached node always enter the UNATTACHED state since either the node finds its address in a detached-node-list or misses HELLO-RETRY−1 HELLO packets and goes into the UNATTACHED state before it sees a "good" HELLO packet from its parent.

Lastly, any node which receives a HELLO packet from its parent with an infinite distance immediately enters the UNATTACHED state. If the node is a bridge, it must continue to broadcast HELLO packets with an infinite distance for HELLO-times.

Old invalid paths may exist in the spanning tree for a period of time. For example, if a terminal detaches and reattaches to a different branch in the spanning tree, all downstream nodes in the new branch "learn" the new path to the terminal. Nodes which were also in the old path change their routing tables and no longer forward packets along the old path. At least one node, the root, must be in both the old and new path. A new

path is established as soon as an end-to-end attached request packet from the terminal reaches a node which was also in the old path. Any remaining old path fragment is disjoint from the new path.

A parent node generates a DETACH.request packet whenever it is unable to deliver a message to a child node. When a parent node is unable to deliver a message to a child bridge node, it sends a DETACH.request packet, to the root node, which contains a detached-node-list describing the lost subtree. The list contains all nodes in the routing table of the parent for which the lost bridge was the first upstream hop. All downstream nodes in the path of the DETACH packet must adjust their routing tables by deleting entries which match those in the detached-node-list.

When a parent node is unable to deliver a message to a terminal, it must generate a DETACH.request packet with the terminal specified in the associated detached-node-list and flood the packet throughout all branches of the spanning tree. This packet is forwarded using a reliable broadcast mechanism. In response a DETACH packet is issued which contains a forward list to specify which nodes should forward and acknowledge the DETACH-request. Initially, the forward list consists of all bridges which are either children or the parent of the node which generated the packet. Nodes in the forward list acknowledge the DETACH.request with a DETACH.response and forward the DETACH.request along all branches of the spanning tree except the branch it was received on, but with one exception. A bridge node in the forward list does not forward an entry in the detached list of a DETACH.request if the DETACH.request came from an upstream node and the upstream node is not the first hop in the routing table entry associated with the entry in the detached-node-list. Upstream bridges which do not have bridge nodes as children broadcast the DETACH.request one time without a forward list.

The destination address used to forward a flooded DETACH.request is global. Therefore, the detached terminal receives a DETACH.request and quickly learns that it has been detached. All bridge nodes, which receive the DETACH.request, add the detached terminal to their detached-node-list. These lists are broadcast in HELLO packets for HELLO-times or until the bridge determines the terminal has reattached.

All attached non-terminal nodes broadcast periodic HELLO packets in discrete HELLO-slots at calculated intervals. Nodes learn which HELLO-slots are busy and refrain from transmitting during the occupied region of busy HELLO-slots. Bridge nodes do not transmit HELLO packets in busy HELLO-slots.

The HELLO packet contains a "seed" field used in a randomization algorithm to determine the next HELLO-slot for the transmitting node and the next seed. The address of the transmitting node is used as a factor in the algorithm to guarantee randomization. Nodes can execute the algorithm "i" times to determine the time (and seed) of the "i-th" HELLO packet from the transmitter. After attaching, a bridge chooses a random initial seed and a non-busy HELLO slot and broadcasts a HELLO packet in that slot. The bridge chooses succeeding HELLO slots by executing the randomization algorithm. If an execution of the algorithm chooses a busy slot, the next free slot is used and a HELLO "displacement" field indicates the offset from the calculated slot. Cumulative delays are not allowed (i.e., contention delays during the "i-th" HELLO transmission do not effect the time of the "i+1" HELLO transmission). In addition, default HELLO-TIME and HELLO-SLOT-TIME values are set at compile time and are well-known by all nodes. Modified HELLO-TIME and HELLO-SLOT-TIME values are set by the root node and are advertised throughout the network in HELLO packets. The HELLO-SLOT-TIME values must be large enough to minimize HELLO contention.

A node initially synchronizes on a HELLO packet from its parent. A SLEEPING node can calculate the time of the next expected HELLO packet from its parent and can power-down with an active timer interrupt set to wake it just before the HELLO packet is transmitted. The bridging entity in a parent node can store messages for SLEEPING nodes until the message are requested. A terminal learns that it must request a saved message by examining the pending message list in the HELLO packet. This implementation enables SLEEPING terminal to receive unsolicited messages and relaxes the timing constraints for transaction oriented messages. Retries for pending messages are transmitted in a round-robin order when messages are pending for more than one destination.

The bridging layer does not provide a reliable end-to-end service, thus lost and duplicate packets are handled by a higher layer. The bridging layer does not fragment packets and packets are normally delivered in sequence.

The data-link layer is implemented as an extension of Class 2 (LLC) (Logical Link Control as defined in ISO Standard 8802-2.2. The extensions to LLC are: an additional unnumbered command frame—SABMX, and 15-bit send and receive sequence numbers. In addition, the implantation must include an adaptive time-out algorithm for retransmissions. Unreliable ("type 1") and reliable ("type 2") connection-oriented services are provided. The unreliable service is provided for terminals which support a reliable end-to-end transport protocol with a host computer. LLC type 2 provides a reliable end-to-end transport service for long-lived terminal-to-terminal connections within the spanning tree network. A fast-connect VMTP-like transport protocol is used for transient terminal-to-terminal connections. The VMTP-like service is primarily provided for Remote Procedure Calls (RPC), client/server transactions, and short mail messages.

The interfaces to the next upper (i.e. application) layer include:

1) handle=CONNECT(destination, . . .);
2) handle=LISTEN($SAP, . . .);
3) SEND(handle, buffer, length, [destination]);
4) DATAGRAM(handle, buffer, length, [destination]);
5) TRANSACTION(handle, tx-buf, tx-len, rx-buf, max-rx-len, IDEMPOTENT, destination);
6) RECEIVE(handle, buffer, max-length, [destination]);
7) PENDING_MESSAGE(handle, [destination]); and
8) DISCONNECT(handle).

Designation fields are formed by concatenating the destination service access point (DSAP) with the destination network address where aliases are used for both. For example, 3270@HOST1 might designate a 3270 terminal controller application in a controller node. The DSAP can specify a remote terminal application or the access point to a higher layer protocol in a remote node. More specifically, the "handle" designates the connection type and is the connection identifier for LLC connections. The optional "destination" filed in send and receive operation is only used for the VMTP-like interface. SEND messages require a response. DATAGRAM messages are used to send messages to a hose which is capable of supporting end-to-end host-to-terminal transport connections and do not require a response. TRANSACTION is used to send transaction-oriented messages with the VMTP-like facility. An error occurs if a return message is not received in a TRXN-TIME-OUT period. The data-link/transport entity saves response messages and resends the response when a duplicate transaction message is received. In addition,

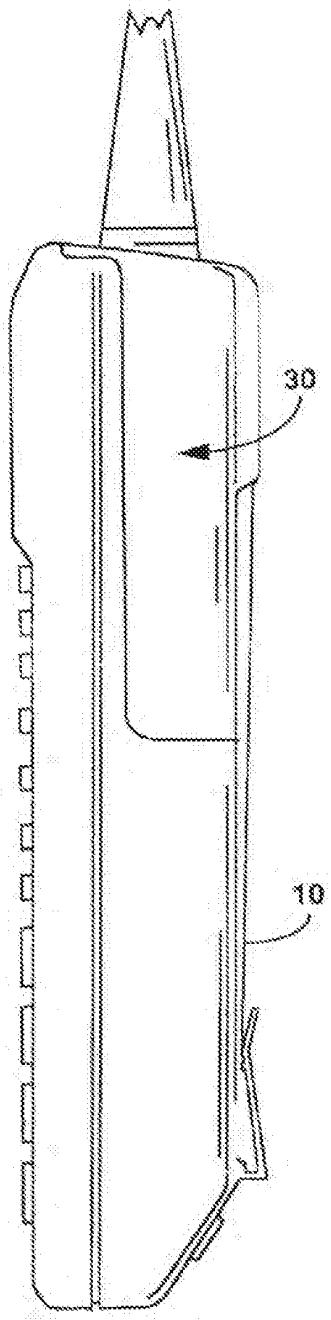

FIG. 3

an application can mark a transaction as redoable, by setting the IDEMPOTENT flag ON. In this case, the response message is not saved and the response is regenerated by re-executing the transaction. A response message can be guaranteed in the form of an acknowledgment from a higher layer protocol.

Because the bridging layer provides an unreliable service, the data-link layer is required to detect duplicate packets and retransmit lost packets. Detecting duplicates is facilitated by numbering data-link packets with unambiguous sequence numbers.

LLC type 2 connections are established by sending a SABMX control frame to the destination network address. To prevent frames from old connections from being accepted (i.e. with a sequence number of "1") the node which initiates a connection must ensure that at least MAX-PACKET-LIFE time has expired since the last connection before issuing a new CONNECT for the same destination. Because of the required waiting period, type 2 LLC connections are not ideal for the type of transient connections needed to reliably facilitate remote procedure calls, client/server transactions, and sporadic mail messages.

LLC frames are sequenced from, zero ("0") to MAX-SEQ. The maximum number of outstanding frames (i.e., transmitted but not acknowledged) is LLC-WINDOW-SIZE. The default value LLC-WINDOW-SIZE is relative small, but the window size may be expanded with an XID frame. Because all frames sent during a connection may not follow the same path, no more than MAX-SEQ frames may be sent in a MAX-PACKET-LIFE time period.

A problem can arise when a node successfully transmits a data-link frame to the next downstream hop on a busy path but loses all acknowledgments. At this point, the node is detached and must quickly reattach to the spanning tree. If the next parent of the node is on a shorter, less busy branch, frames on the new path can easily arrive at the destination while old frames still exist in the old path. MAX-PACKET-LIFE is equal to MAX-HOPS multiplied by XMIT-Q-SIZE multiplied by MAX-RETRY-TIME, where MAX-HOPS is the maximum length of a branch of the spanning tree in hops, XMIT-Q-SIZE is the number of packets which can be queued in each node, and MAX-RETRY-TIME is the maximum time the MAC layer can spend retrying a frame before it is successfully sent. This problem is solved by increasing the size of the send and receive sequence number fields (i.e. from 7 bits to 15 bits) so that the N(S) and N(R) fields in an information frame can never roll over faster than MAX-PACKET-LIFE time. Note that the spanning tree topology insures that packets will not loop.

VMTP-like connection records are built automatically. A VMTP-like connection record is built or updated whenever a VMTP-like transport message is received. The advantage is that an explicit connection request is not required. A VMTP-like connection is half-duplex. It is contemplated, however, that a full-duplex connection at a higher layer could be built with two independent half-duplex VMTP-like connections. Acknowledgements must be handled by higher layers. Connections are defined by the concatenated network end-to-end destination and source addresses and service access points. The LLC type 2 data-link entity in a node stores messages for possible retransmission. Retransmissions may not always follow the same path primarily due to moving terminals and resulting changes in the spanning tree. For example, the bridging entity in a parent node may disconnect a child after the MAC entity reports a message delivery failure. The child soon discovers that it is detached and reattaches to the spanning tree. When the data-link entity in the root resends the message, it follows the new path.

The data-link entity in a terminal calculates a separate time-outs for SEND and TRANSACTION operations. Initially, both time-outs are a function of the distance of the terminal from the root node. A TCP-like algorithm is used to adjust the expected propagation delay for each message type to the end-to-end distance and load without causing sporadic changes or dramatic swings in time-out values. Messages, which require a response, are retransmitted if twice the expected propagation time expires before a response is received. SLEEPING terminals can power down for a large percentage of the expected propagation delay before waking up to receive the response message. Missed messages may be stored by the bridging entity in a parent node for a predetermined number of HELLO times.

The MAC layer is responsible for providing reliable transmission between any two nodes in the network (i.e. terminal-to-bridge). Access to the network communications channel is regulated in several ways. First, the HELLO protocol, described above, reduces contention for HELLO packets. Second, nodes are grouped into logical coverage areas associated with a single bridge node. CSMA and LBT algorithms are used to gain access to the channel. Lastly, a polling protocol reduces contention for data frames.

IEEE 802.3 media access control is used for ethernet links. A p-persistent CSMA/CA with ARQ (automatic retry request) protocol is used to gain access to the channel on the RS485 LAN. In addition, a collision avoidance protocol is implemented on RS485 LAN links. Bridging layer packets are typically sent in a single MAC layer data frame on both ethernet and RS485 LAN links. Short blocks can be transmitted as soon as an idle channel is detected. Before a long data frame can be transmitted on a wired link a potential transmitter must sense an idle channel, transmit an RFP frame and receive a POLL frame from the receiver. After a data frame is transmitted, the receiver notifies all listening nodes that the channel is free by sending a CLEAR frame.

A simple return priority mechanism is implemented by requiring a potential transmitter to sense an idle line for an IDLE-TIME period which exceeds the maximum transmitter/receiver turnaround time. The recipient of a unicast frame "owns" the channel for the turnaround time and can respond without executing the CSMA algorithm. This approach makes response times more deterministic and allows the sender to set response time-outs tightly. Short time-outs allow transmitting nodes to quickly retry out and discover disconnected links.

A CSMA random-backoff algorithm specifies backoff delays as a function of the CSMA slot time.

A CSMA slot is calculated as a function of the worst-case carrier-sense ambiguous period. If, for example, in the worst case, it takes a character-time to determine that a frame is in progress then the CSMA slot time is defined to be slightly longer than one character time. The algorithm divides the sense time into "p" contiguous slots and chooses a number, "i", between one ("1") and "p". If the first "i" slots are idle then the algorithm allows transmission in the "i+1" slot. If one of the first "i" slots is busy, the device executing the algorithm listens until the channel is idle and re-executes the algorithm.

A polling protocol, which is consistent with the collision avoidance protocol used on wired links, is used to gain access to the channel on spread spectrum radio links. The polling protocol reduces contention in an environment with hidden terminals in several ways. On radio links, a MAC transmitter fragments a bridging layer packet into short fixed length frames before the packet is sent. The fragments are reas-

sembled by the receiver and are posted to the receiver's bridging layer if, and only if, all frames in the packet are received. A group of frames which is associated with a single bridging layer packet is called a bracket. Fragmentation at the MAC layer allows the MAC entity to used a (shorter) frame size which is suitable for the like error rate without impacting packet sizes at the bridge layer.

Additionally, the polling radio link protocol generally limits contention of RFP frames. Before a bracket of frames can be transmitted on a radio link, a potential transmitter must sense an idle channel, transmit an RFP frame and receive a POLL frame from the receiver. If the receiver is busy it responds with a wait-for-poll (WFP) frame. The WFP frame positively acknowledges the RFP frame and causes the transmitter to wait for a POLL frame. Nodes are queued for polling in the order in which RFP frames arrive. After the last frame in a bracket is transmitted and successfully received, the receiver sends a CLEAR frame to notify all listening nodes that the channel is open.

In summary, the MAC layer:

1. accepts frames from the bridging layer and passes frames to the physical layer for transmission;

2. appends MAC layer framing bytes and CCITT-16 FCS bytes to transmitted frames;

3. removes MAC layer framing bytes and FCS bytes from received frames;

4. verifies the FCS bytes in received frames;

5. filters out frames which do not belong to the SST network on the local device;

6. filters out packets which are not directed to the local device;

7. forwards packets to the bridging layer which are directly addressed to the local device, or are broadcast or multicast to the local device;

8. regulates access to the communications channel on RS485 links and spread spectrum radio links;

9. schedules lost unicast frames for retransmission;

10. detects and discards duplicate back-to-back unicast MAC level data frames;

11. provides device-to-device flow control;

12. transparently fragments and reassembles bridging layer packets, which exceed the maximum MAC frame size; and

13. maintains and provides diagnostic statistics for higher layers.

Before delving into the specifics of the MAC layer a few points must be clarified. First, p-persistent CSMA/CA (carrier sense multiple access with collision avoidance) protocol is used to gain access to an RS485 LAN. The collision avoidance scheme gives channel access priority to the recipient of a unicast frame. Second, on lightly loaded spread spectrum radio links, a non-persistent CMA algorithm is used to gain access to the communications channel. Third, on moderately to heavily loaded spread spectrum radio links, an LBT/BP (listen-before-talk with busy pulse) algorithm is used to gain access to the channel and minimize the effect of hidden nodes. An LBT slot is defined as the total time required to transmit an RFP (request-for-poll) frame plus the time required by the receiver to begin transmitting the response.

Finally, CSMA idle time is the minimum time that a potential transmitter must sense an idle channel before assuming the channel is idle. The CSMA idle time is greater than the interframe gap plus the CSMA slot size. LBT idle time is the minimum time that a potential transmitter must sense an idle radio channel with hidden nodes before assuming the channel is idle. The LBT idle time is greater than the interpoll gap time plus the CSMA slot size.

MAC-level frames are categorized as either request or poll frames. The DATA, FRP and ENQ frames are request frames while POLL, WFP, CLEAR and REJECT frames are poll frames. More specifically, a DATA frame is a MAC-level request frame which is used to send higher-layer data to a receiver.

An EOD (end-of-data) frame is a MAC-level request frame which is sent as the last data frame in a bracket of one or more data frames. Note that a bracket of data frames may consist of a single EOD frame. An FRP (request-for-poll) frame is a MAC-level request frame which is used to request polling from a receiver and to determine the SEQ state of the receiver. An ENQ (enquiry) frame is a MAC-level request frame which is used to determine the SEQ state of a receiver and to determine if a node is within range. A POLL frame is a MAC-level poll frame which is used to obtain a data frame from another node and to return the current SEQ state.

A WFP (wait-for-poll) frame is a MAC-level poll frame which is used to inform a requesting node that it is scheduled to be polled later and to return the current SEQ state. A CLEAR frame is a MAC-level poll frame which is used to inform all listening nodes that the last frame in a bracket of frames has been received and to return a defined SEQ state. A REJECT frame is a MAC-level poll frame which is used to return an undefined SEQ state or to indicate that a received request frame was invalid.

Each request or poll frame contains a control byte wherein each bit represents an element of information or control.

Three categories of bits in the control bytes of the request frame and the poll frame are the same. These bits are: 1) the R/P bit is used to distinguish MAC layer request and poll frames. If the R/P bit is set OFF the frame is a request frame. If the R/P bit is set ON the frame is a poll frame. 2) The SEQ bit is used to sequence MAC layer data frames, modula 2. The SEQ field is used to detect and discard duplicate packets. A state machine which illustrates the use of the SEQ bit and the response ACC bit is shown below; 3) The LAD ID bits. The MAC frame belongs to the spanning tree specified by the LAN ID bits. The MAC entity discards frames which belong to spanning trees which are not in its LAN_ID_list. Note that LAN_ID_list is a parameter of the MAC_enable call.

The request frame control byte further includes a Data bit, MORE bit and priority bit. The DATA bit is used to distinguish control request frames from data request frames. In control request frames the MORE bit is used to distinguish RFP frames from ENQ frames. In data request frames, the MORE bit is used to distinguish between DATA frames and EOD frames. The last frame sent in a bracket of data frames is always an EOD frame.

The Priority bit includes the priority of a higher layer message and is set as specified by the bridging layer, in the MAC_send call. The receiver simply passes the priority to the bridging layer. The Priority bit value is the same for all frames which are associated with a bracket of frames.

The poll frame control byte further includes a MORE bit and WAIT bit. The MORE bit is used to distinguish POLL frames from CLEAR frames. The WAIT bit is used to distinguish POLL frames from WFP frames. The receiver of a request frame can return a poll frame with the WAIT bit set ON in the associated poll frame to put the requesting node in a quiet state for WFP-TIMEOUT seconds. The requesting node must refrain from transmitting unicast frames to the receiver until the quiet period expires or a POLL frame is received from the receiver. In addition, a REJECT frame is specified by setting the MORE bit OFF and the WAIT bit ON.

Each node in the network has a single bridging entity which invokes a MAC entity per port to send and receive messages on the port. MAC layer services are provided with the following software routines:

1) MAC_enable (port, LAN_ID_list);
2) MAC_set-address (port, net_address);
3) MAC_send (port, desk net_address, buffer, control_flags, [mailbox], [queue]);
4) length=MAC_accept (port, buffer, wait);
5) MAC_stop (port);
6) MAC_start (port);
7) MAC_disable (port);
8) MAC-enquiry (port, desk_net_address); and
9) MAC-diagnostic (port, . . .).

Initially, the MAC entity attached to a port is in a DISABLED/OFF state. The bridging layer enables a MAC entity on a port by calling MAC-enable (port, LAN-ID-list), where LAN-ID-list defines the spinning trees to which the node can belong. MAC-enable changes the MAC entity state to ENABLED/ON.

The MAC entity uses a default multicast address consisting of the node type and a node identifier of all 1's, until the bridging layer assigns a specific network address to the MAC entity. The MAC-set-address call is provided for this purpose.

The bridging layer accepts messages from the MAC entity by issuing a MAC-accept call. The returned buffer includes the MAC header, but does not include media framing and CRC characters. The wait parameter can be used to suspend the caller for some length of time or until a message is received. The MAC entity must be capable of queuing messages until they are accepted by the bridging layer.

The bridging layer requests the MAC entity to transmit a bridging layer packet by issuing a call to MAC-send. Packets are grouped into a set of one or more MAC layer frame which, together, constitute a bracket. On radio ports, if the size of a bridging layer packet exceeds the maximum MAC frame length, then the packet is fragmented. A bracket normally contains a single data (EOD) frame on wired links. The MAC entity prefixed a MAC header to the beginning of each frame in a bracket before transmitting each frame. The MAC layer is also responsible for providing media framing, which includes a link-type dependent synchronization preamble, start-of-frame delimiter, end-of-frame delimiter, and CRC-CCITT frame check sequence bytes for each frame. The control-flags parameter in the MAC-send call is used to: 1) set the priority bit in the MAC header (priority); 2) to indicate if the buffer is being sent in response to a multicast bridging layer packet (p-flag); and 3) to set the LAN ID field in the MAC header. The optional mailbox and queue parameters are mutually exclusive and are used for asynchronous calls. Also, the maximum size of a buffer passed to the MAC layer for transmission is MAX-PKT-SIZE. The bridging layer can disable the MAC receiver by calling MAC-stop. The MAC entity is in an ENABLED/OFF state after a call to MAC-stop is used. The bridging layer forces the MAC entity back into the ENABLED/ON state by calling MAC-send or MAC-start. The bridging layer can disable the MAC entity and force it to the DISABLED/OFF state by calling MAC-disable. In addition, MAC-enquiry can be used to determine if a destination node is within range, and MAC-diagnostic is used to retrieve diagnostic statistics from the MAC layer.

When the MAC entity is in an ENABLED/ON state it is continuously listening on its assigned port. The MAC entity receives all MAC layer frames. Frames which do not pass a CRC-CCITT check are invalid and are discarded. Valid data frames are reassembled into a complete packet which is posted to the bridging entity if: 1) the LAN ID in the MAC header is among those contained in the LAN ID list passed to the MAC entity in the MAC-enable call; and 2) the destination address in the MAC header is equal to the network address of the local node, or is unacceptable multicast or broadcast address.

The high-order multicast bit is set ON in all multicast or broadcast frames. A multicast or broadcast frame is accepted if the node type specifies a group to which the local node belongs and either the node identifier is all ones ("1's"), or the node identifier is equal to the identifier of the local node. A response is never required when the multicast bit is set ON.

A default network address used when the MAC entity is first enabled consists of the multicast node type concatenated with a node identifier of all ones. For example, the default address for a bridge is hexadecimal A7FF. The bridging layer is responsible for obtaining a network address and assigning it to the MAC entity on the port.

A return priority mechanism is used to group MAC layer request and poll frames into a single CA sequence. A channel access algorithm is executed to gain access to the channel before the first frame in a CA sequence is transmitted. All other frames in a CA sequence may be sent without executing the channel access algorithm. The idle time between frames which belong to a single CA sequence must be less than the maximum interframe gap time. On wired links, the CSMA/CA algorithm forces nodes to detect an idle channel for CSMA idle time which exceeds the interframe gap time before initiating a CA sequence. On radio links "hidden nodes" can cause throughput to be significantly degraded on spread spectrum radio links. Under lightly loaded conditions, a CSMA channel access algorithm allows nodes to access the radio channel immediately after detecting an idle channel. Under moderate to heavily loaded conditions, the LBT/DP algorithm forces nodes to detect an idle radio channel for an LBT idle time which exceeds the interpoll gap time before accessing the channel. By listening for longer than the interpoll gap time, a node will detect a conversation in progress, if both involved nodes are in range or only one node is in range and the other node is hidden. Limiting the time between frames in a CA sequence to a short fixed interval, essentially provides a busy-pulse signal which spans the coverage area of both nodes involved in a conversation.

A CA sequence of frames begins with the transmission of a request or poll frame, following an execution of the channel access algorithm. Possible successive frames in a CA sequence are: 1) any poll frame sent in response to a unicast request frame; 2) a DATA or EOD frame sent in response to a POLL frame; or 3) a bridge node can "piggyback" a second frame onto a transmitted broadcast, multicast, WFP CLEAR, or REJECT frame, by transmitting the second frame within the interframe gap time.

The size of packets which are passed to the MAC layer by the bridging layer must be less than or equal to MAX-PKT-SIZE, where MAX-PKT-SIZE specifies the total length of the packet, including bridging and data-link header characters.

Packets which are larger than MAX-FRAME-SIZE must be fragmented, by the MAC entity, to insure that the interpoll gap time is constant. The fragmented frames are transmitted as a bracket with the MORE bit set OFF in the last frame to mark the end of the bracket. Frames which belong to a single bracket are reassembled by the MAC entity in the receiver before the packet is posted to the bridging layer in the receiver. If the entire bracket is not received successfully, all other frames in the bracket are discarded by the receiver. The maximum number of data frames in a bracket is the ceiling of MAX-PKT-SIZE/MAX-FRAME-SIZE.

MAX-FRAME-SIZE does not include characters added at the MAC level. MAX-FRAME-SIZE on the 192K bps spread spectrum radio link is limited by the interpoll gap time. On a wired links with low error rates, MAX-FRAME-SIZE is set so that a bracket is generally limited to a single LIMITED frame.

A bracket of frames may be transmitted in one or more CA sequences where a channel access algorithm is used to gain access to the link for each CA sequence. A transmitter initiates the transmission of a bracket of frames by sending either an RFP frame or an EOD frame to a receiver. If a receiver is not busy, the receiver responds to RFP and DATA frames with a POLL frame, which solicits the next DATA frame and implicitly acknowledges the previous frame. A receiver responds to an EOD frame with a CLEAR frame. If a receiver is busy or does not have a buffer, the receiver may respond to RFP, DATA or EOD frames with a WFP frame.

The node which initiates a bracket of frames (i.e., the transmitter) is responsible for recovery until the first POLL frame is received. The receiver is responsible for polling the transmitter as soon as an RFP frame is received and assumed responsibility for recovery at that point. It is possible for both the transmitter and receiver to be in contention to recover a lost frame (i.e., RFP or DATA) if the POLL frame is lost. The contention is resolved with a random backoff algorithm. If a CLEAR frame is lost and the polling node which sent the CLEAR frame is responsible for recovery, the requesting node which initiated the bracket cannot determine if the link was lost or the CLEAR frame was lost. The requesting node must send an ENQ frame to determine which case holds.

This preferred embodiment utilizes a state machine (SM) to control network communication. No state machine is required for multicast and broadcast frames, however. Multicast and broadcast frames can be transmitted whenever the channel is available. Received multicast or broadcast frames are simply discarded or posted to the bridging layer. Various state machines are used to handle other communication aspects. These include the bracket-transmit, bracket-receive, receive-SEQ-control and transmit-SEQ-control state machines.

Specifically, the bracket-transmit state machine used provides IDLE, READY, S-RFP, S-DATA, S-EOD, READY2 and S-EOD2 states. The IDLE state causes this state machine to idle, waiting a bracket of frames to transmit. The READY occurs when the state machine has a bracket of one or more frames to transmit and is waiting to acquire the channel. The S-RFP state occurs when the state machine has sent an RFP frame and is waiting for a POLL frame. The S-DATA state occurs when the state machine has sent a DATA frame and is waiting for a POLL frame. The S-EOD state occurs when the state machine has sent an EOD frame after receiving a POLL frame and is waiting for a CLEAR frame. The RDY-WAIT state occurs when the state machine has received a WFP frame and is waiting for a POLL frame (or timeout).

The READY2 and S-EOD2 states only apply to transmissions on a wired link which are not initiated with a request for polling. The READY2 state occurs when the state machine has a single short frame to transmit, is waiting to acquire a wired link, and the SEQ state of the receiver is known. The S-EOD2 state occurs when the state machine has sent an unsolicited EOD frame is waiting for a CLEAR frame.

There is an automatic and immediate transition from the READY state to the READY2 state if the communications channel is a wired link, the SEQ state of the receiver is known, and the bracket to transmit consists of a single EOD frame which is less than MAX-SHORT-FRAME-SIZE in length.

The state machine also uses various timers. A RP-TIMEOUT receive timer is started when an RFP frame is transmitted, an ENQ frame is transmitted, and (on wired links), when an EOD frame is sent without first sending an RFP frame. The timeout value is larger than interframe gap time plus the time required to transmit a POLL or CLEAR frame. If the RSP-TIMEOUT timer expires before an expected response is received, a retry counter is incremented and the request frame is retransmitted, if the retry count has not been exceeded.

A POLL-TIMEOUT receive timer is also used. This timer is started whenever a DATA or EOD frame is transmitted following an RFP frame. The timeout value is larger than the time required for the maximum number of poll retry attempts. The MAC layer returns an error to the bridging layer if this timer expires before an expected poll frame is received. Note that the receiver is responsible for recovery when this timer is running. Similarly, a WFP-TIMEOUT timer is started whenever a WFP frame is received. The RDY-WAIT state ends when this timer expires or a POLL frame is received.

The state machine must maintain a "current pointer" variable which points to the current frame in a bracket of frames to be transmitted. The current pointer is advanced if, and only if, a POLL for the next frame in the bracket is received. If more than one transition is specified when a POLL frame is received, the state of the current pointer determines which transition should be taken.

In the bracket-receive state machine, an assumption is made that invalid frames and frames not directed to the local node are discarded and do not affect state transitions. Multicast and broadcast frames are simply posted to the bridging entity, if a buffer is available, and do not affect state transitions.

There are three states in the bracket-receive state machine: 1) IDLE-LISTEN; 2) BUSY; and 3) BUSY-WAIT. The IDLE-LISTEN state occurs whenever the receiver is not receiving a bracket of frames. The BUSY state occurs when the receiver has sent a POLL frame and is waiting for the next frame in a bracket. Finally, the BUSY-WAIT state occurs when the receiver is waiting for a buffer to become free.

The bracket-receive state also uses the RSP-TIMEOUT and WFP-TIMEOUT timers. Specifically, the RSP-TIMEOUT timer is started when a POLL frame is transmitted. The timeout value is larger than interframe gap time plus the time required to transmit a DATA frame. If the RSP-TIMEOUT timer expires before an expected response is received, a retry counter is incremented and the POLL frame is retransmitted, if the retry count has not been exceeded. The receiver must maintain a poll-queue which is a FIFO list of all terminals which have requested polling. Entries in the queue are aged so that they are discarded after WFP-TIMEOUT seconds. The entry at the front of the queue is considered active; all other entries in the queue are denoted as queued. Nodes which are not active nor queued are denoted as inactive. Note that there is no active node in the IDLE-LISTEN state. Additionally, a separate queue can be used for high priority requests.

A SEQ state variable is cached for all nodes which have recently transmitted valid data frames. The SEQ state variable is updated as specified in the section which describes state machines for frame SEQ control.

Only one bracket may be in progress at a time. The receiver must reserve enough buffers for an entire bracket of frames before sending a POLL frame in response to an RFP frame. This ensures that the entire bracket will be accepted.

All unicast MAC data frames are sequenced with a 1-bit sequence number (SEQ). The sequence number is used to detect lost data frames and duplicate data frames. The MAC

entity in each node must maintain transmit and receive SEQ state tables for unicast messages. The receive SEQ state table contains an entry for each active MAC source node. The transmit SEQ state table contains an entry for each active destination node. Each entry consists of a 1-bit SEQ state variable and a network address. Only unicast command frames affect state table entries. As a rule, a receive table entry should be discarded before the counterpart transmit table entry (i.e., in another node) is discarded. Receive SEQ state table entries need only be kept long enough to ensure that retransmitted duplicates are not mistaken for valid frames. This implies that receive table entries must be kept for a period longer than the maximum transmit retry time for a single frame. An entry in the transmit SEQ state table can be kept until the space is required for a new entry. Strict state timing is not required because a transmitter, (without a table entry for a potential receiver), can determine the state of a receiver, (with an RFP frame), before transmitting data frames. Also, the MAC layer does not provide a reliable service. Lost frames and duplicates are detected by higher layers.

The receive-SEQ-control and transmit-SEQ-control state machines specify how entries in the SEQ state tables are maintained. The use of the term "poll" is used to denote any poll frame (i.e., POLL, WFP, CLEAR, or REJECT) and the term "data" is used to denote any data frame (i.e., DATA or EOD).

More specifically, the receive-SEQ-control state machine uses three states: 1) ACCEPT-0; 2) ACCEPT-1; and 3) ACCEPT-ANY. In the ACCEPT-0 state, the receiver expects the next DATA or EOD packet to have a SEQ number of 0. In the ACCEPT-1 state the receiver expects the next DATA or EOD packet to have a SEQ number of 1. Finally, in the ACCEPT-ANY state the receiver will accept a DATA or EOD packet with a SEQ number of 0 or 1.

The MAC receiver caches receive SEQ state variables for active external source nodes. The variable can be set to one of three states listed above. A state of ACCEPT-ANY applies to all nodes which do not have entries in the receiver's SEQ state table. The receiver sets the SEQ bit in a poll frame to denote the next frame that the receiver expects.

The transmit-SEQ-control state machine also utilizes three states: 1) SEND-0; 2) SEND-1; and 3) UNKNOWN. In the SEND-0 state, the transmitter sends the current data frame with a SEQ number of 0 and expects a POLL or CLEAR with a SEQ number of 1. In the SEND-1 state the transmitter sends the current data frame with a SEQ number of 1 and expects a POLL or CLEAR with a SEQ number of 0. In the UNKNOWN state, the transmitter must send an RFP or ENQ frame to determine the SEQ state of the receiver.

The MAC transmitter maintains a transmit SEQ state variable per external node. The transmitter sends the SEQ field in DATA and EOD frames to the value of the transit SEQ state variable. The state variable can be in one of the three states listed above. The UNKNOWN state applies to all nodes which do not have entries in the transmitter's state table. If the state is UNKNOWN, the transmitter sends an RFP or ENQ frame to determine the SEQ state of the receiver before sending a data frame. On radio links, the SEQ state is set to UNKNOWN as soon as the transmission of frames is completed.

The SEQ field in a poll frame denotes the next data frame expected. Each time a poll frame is received, the transmit SEQ state variable associated with the source of the poll frame is set to the value of the poll frame's SEQ field. A "current pointer" points to the current data frame in a bracket of data frames. The current pointer is advanced if the current data frame has been transmitted with a SEQ field value of "0" ("1") and a poll frame is received with a SEQ field value of "1" ("0").

Various network constants are also used in this preferred embodiment. These include:

1) WFP-TIMEOUT	(1 second) this is the time that a node remains in a quite state waiting for a POLL frame after a WFP frame is received;
2) MAX-PKT-SIZE	(800 bytes) this is the maximum size of a bridging layer packet including bridging header characters;
3) R-MAX-FRAME-SIZE	(100 bytes) this is the maximum size of a MAC layer frame on the spread spectrum radio link, not including MAC header and framing characters;
4) W-MAX-FRAME-SIZE	MAX_PKT_size, is the maximum size of a MAC layer frame on the RS485 LAN, not including MAC header and framing characters;
5) W-MAX-SHORT-FRAME-SIZE	(200 bytes) this is the maximum size of a MAC layer frame which can be transmitted without first sending a RFP frame on the RS485 LAN;
6) W-SLOT-SIZE	(50 microseconds) this is the CSMA slot size for the RS485 LAN;
7) W-INTERFRAME-GAP	(200 microseconds) this is the maximum interframe gap time for the RS485 LAN.
8) W-IDLE-TIME	(W-INTERFRAME-GAP + W-SLOT-size + 50 microseconds) this is the CSMA idle time on the RS485 LAN;

-continued

(9) R-SLOT-SIZE	(1000 microseconds) this is the LBT slot size on the spread spectrum radio link;
(10) R-INTERPOLL-GAP	(500 microseconds) this is the interpoll gap time on the spread spectrum radio link; and
(11) R-IDLE-TIME	(R-INTERPOLL-GAP) this is the LBT idle time on the spread spectrum radio link.

THE CSMA/CA channel access algorithm used on the RS485 LAN differs from the LBT algorithm for radio links because of the hidden terminal factor in the radio network. Particularly, the p-persistent CSMA/CA algorithm forces all nodes to detect an idle channel for one CSMA idle time unit, where a CSMA idle time unit is greater than the interframe gap time, before the channel is considered free. If a node initially detects a free channel, it can transmit immediately. If a node detects a busy channel, it listens to the channel until it becomes free. When the channel becomes free, at that point, time is divided into "p" CSMA slots. The node selects one of the "p" slots, "i", at random. If the channel is idle for the first i−1 ("i" minus one) slots, the node transmits in slot i. If the channel becomes busy in one of the first i−1 slots, the process is repeated. If an expected response is not received, a node chooses a number, "i", between one ("1") and p, and delays for "i" CSMA slots before re-executing the CSMA algorithm to retransmit. The number of backoff slots, p, is given as an increasing function of the number of missed responses and busy channel directions.

The LBT algorithm functions as a pure CSMA algorithm when the channel is lightly loaded. A channel is allowed to transmit as soon as an idle channel is detected. CSMA is never used for retransmissions. When the channel is moderately to heavily loaded, the LBT algorithm forces all nodes to detect an idle channel for at least one LBT idle time unit, (this unit being greater than the interpoll gap time) before the channel is considered free. If a node initially detects a free channel, it can transmit immediately. If a node detects a busy channel, it listens to the channel until it becomes free. When the channel becomes free, at that point, time is divided into "p" LBT slots. The node selects one of the "p" slots, "i", at random. If the channel is idle for the first i−1 slots, then the node will transmit in slot i. If the channel becomes busy in one of the first i−1 slots, the process is repeated. If an expected response is not received, a node chooses a number, "i", between one ("1") and "p", and delays for "i" LBT slots before re-executing the LBT algorithm to retransmit. The number of backoff slots, "p", is given as an increasing function of the number of missed responses and busy channel detections.

The CSMA/CA algorithm for the RS485 LAN, and the LBT/BP algorithm for spread spectrum radio links are both shown in pseudo-code in Appendix A.

This network embodiment uses what will be referred to as "SST Multi-drop LAN" techniques herein. The SST Multi-drop LAN shown in FIG. **9** is built on what is called a "linear" topology. A single cable **501** forms a line and each device is simply connected to the line. In a typical warehouse facility **503**, the multi-drop network consists of the cable **501** connecting bases stations **505-521** and **503** a controller **523**. The controller **523** and the base stations **505-521** can be placed anywhere along the cable **501**.

The physical length of the cable **501** depends primarily on the following:

1. the data rate used;
2. the number of devices on the network;
3. the gauge of wire used;
4. the characteristics of the wire used which includes the capacitance, δ dbv length and twist-rate;
5. the shielding of the wire (the combination of braided and foil shields are preferred); and
6. the environment (in a heavy-industrial environment with such things as large motors that start and stop frequently, welding, ultrasonic equipment, electroplating, or other electrically noisy equipment, the distance is less).

For example, using simulated noisy environment AWG #24 wire with eight device and shielded wire, a two thousand foot cable **501** operates without problems. In preferred embodiment, the communication link utilizes NPN 321-457-001 cable (Belden 9841).

If the physical length of the cable **50** needs to be extended, an additional "network segment" can be added. Segments are linked together by repeaters. This repeater can be either a "dumb" bridge, acting to relay all information between segments, or an "intelligent" bridge, relaying information selectively. Further, the repeater does not have to be placed at the end of the communication link. As with base stations and controllers, repeaters can be placed any where it physically makes sense.

Coupling transformer may be used to protect the devices from ESD, EMI, and noise.

Radio bases don't always have to be wired to the network. If a base is within radio range of another base that is connected to the network, then the first base can communicate data from terminals to the host via the second base. For wireless routing, the two coverage areas must overlap enough so that each base is within range of the other. As a result, more radio bases are needed than scenarios using hard-wired routing to the LAN.

As shown in FIG. **10**, wireless routing can reduce the amount of wiring necessary in a facility. This arrangement requires no more than one on-the-air hop from any area, so the performance impact isn't that great.

Wireless routing is especially effective at filling in fringe areas. In the example above, the outside of the loading dock could have marginal coverage. If, once the system is installed, the coverage is this area turns out to be unacceptable, couple of wireless routers could be added to guarantee solid coverage in this area without adding any more wiring. Installation could be complete in just the time required to mount the bases. These bases need only to be taped to a wall to optimize coverage. If this solves the coverage problem, but the customer finds the performance impact unacceptable, then the new bases station could be hardwired in. Terminals being used out on the loading dock in areas where the coverage of the wireless routers and the wired bases overlap automatically

switches between the wireless routers and the wired based depending on which gives the shortest path to the host. There is no danger that adding a wireless router will slow things down by causing terminals to make unnecessary on-the-air hops when they are within range of a wired base.

Another major application for wireless routers is continuing coverage when a wired base fails. A couple of wireless routers setup at ground level or perhaps duct taped a few feet up on support columns, a temporary installation that can be done with a step ladder, could easily fill in most of the blacked-out area until the failed base can be repaired.

Wireless routers can also be a real benefit for operation in temporary physical areas avoiding hard-wiring. In addition, two networks can be linked with wireless routing. In some situations, this may be a good way to eliminate multiple on-the-air hops.

Once all the network hardware is installed and on, the system configures itself and constantly reconfigures itself. As the customer moves goods around his warehouse and radio propagation inside changes, the system reconfigures to try to maintain as much coverage as it can. When a piece of equipment fails, the system reconfigures around it. If a base fails, but the area can be covered by a wireless router, the system automatically uses that router. For example, when a new wireless router is installed, it is automatically assimilated into the system within minutes of merely powering up the router. If that wireless router is hardwired it in, it automatically stops wireless routing and become a wired base. If that hardwired communication link breaks, the two resulting segments automatically begins communicating wirelessly.

Additionally, it is obvious that the embodiments of the present invention described hereinabove are merely illustrative and that other modifications and adaptations may be made without departing from the scope of the appended claims.

APPENDIX A

```
LBT/BP Algorithm For A Transmitter On The Radio Network.
BACKOFFINIT = 20;
R_RSP_TIMEOUT        = R_INTERPOLL_GAP;
MAX-TX-TRIES         = 20;
MAX_IDLE_TRIES       = 50;
rf_rg: functions which return a maximum backoff number based
on the input parameter.
Wait for a MAC_send call.
if p_flag is non-zero then
begin
    select a random number, i, between 0 and BACKOFF_INIT;
    SLOT_OFFSET = i R_SLOT_SIZE;
end
else
    SLOT_OFFSET=0
TX_RETRIES=0
IDLE_RETRIES=0
while TX_RETRIES <MAX TX_TRIES and
IDLE_RETRIES <MAX_IDLE_TRIES and
not OK do
begin
    OK = false;
    detect an idle channel for SLOT_OFFSET+R_IDLE_TIME
    time units;
    SLOT_OFFSET=0;
    if channel is idle then
    begin
        send_frame;
        if a return priority response is expected then
        begin
            wait for response or R_RSP_TIMEOUT timeout;
            if a valid response has been received then
                OK=true;
            else (assume a collision has occurred)
            begin
                TX_RETRIES_TX_RETRIES+1;
                select a random number, i,
                between 0 and rf(TX_RETRIES);
                SLOT_OFFSET=i R_SLOT_SIZE;
            end
        end
    end
end
else (the channel is not idle)
begin
    wait until the channel is idle;
    IDLE_RETRIES=IDLE_RETRIES+1;
    select a random number, i, between 0 and rg(IDLE_RETRIES);
    SLOT_OFFSET=i R_SLOT_SIZE;
end.
```

APPENDIX B

MAC Control Byte (8 bits).*

(Bits 7-5 in the MAC control bytes are used to specify the frame type. MAC frames are one of two basic types: 1) request, or 2) poll, depending on the state of the R/P bit.

Request frame types.

000	EOD (end of data)
001	DATA
010	END (enquiry)
011	RFP (request-for-poll)

Poll frame types.

100	WFP (wait for poll)
101	REJECT
110	CLEAR
111	POLL

Request control byte:

bit 7	R/P	0 = request frame
bit 6	DATA	0 = data frame
bit 5	MORE	1 = middle of bracket (DATA) 0 = end of bracket (EOD) 1 = RFP 0 = ENQ
bit 4	RESET	1 = discard partial bracket
bit 3	PRIORITY	0 = normal, 1 = high
bit 2	SEQ	sequence number, modulo 2
bit 1-0	LAN ID	00, 01, 10 or 11

Poll control byte:

bit 7	R/P	1 = poll frame
bit 6	WAIT	0 = wait for poll
bit 5	MORE	0 = clear
bit 4	reserved	must be zero
bit 3	reserved	must be zero
bit 2	SEQ	sequence number, modulo 2
bit 1-0	LAN ID	00, 01, 10 or 11

Bridge Control Bytes (16 bits).

bit 15-14	Bridge Header Format	00 = multihop, 01 = point-to-point
bit 13	(reserved)	must be zero
bit 12	C/R	0 = command, 1 = response
bit 11	(reserved)	must be zero
bit 10-8	packet type	(see table below)
bit 7	Bridge Parms	1 = optional bridge parms
bit 6	RPRQ	1 = response packet required
bit 5	(reserved)	must be zero
bit 4-3	Protocol	00 = no data-link data, 01 = LLC data
bit 2-0	(reserved)	must be zero

APPENDIX B-continued

Bridge Packet Types.

000	Data Packet
001	Data Request Packet
010	Hello Packet
011	Attach Packet
100	Detach Packet
101	Address Resolution Packet
110	Reverse Address Resolution Packet
111	(reserved)

Optional Bridge Parameters - general format.

1-bit end-of-parms flag	1 = last optional parm
7-bit parm type	(see table below)
1-byte parm length	length of parm value field in bytes
M-byte parm value	(value or list of values)

Optional Parameters.

Parm Type	Parm Length	Description
01h	2 bytes	A 2-byte network address.
02h	8 bytes	Long identifier.
03h	M*2	Decendant List. A list of 2-byte addresses.
04h	N*2	Detached List. A list of 2-byte addresses.
05h	P*2	Pending Message List. A list of 2-byte addresses.
06h	1 byte	Distance (cost) from the root.
07h	Q bytes	Well-known alias.
08h	R bytes	Forward List. A list of 2-byte addresses.
09h	1 byte	Load Indicator. An indication of the channel load based on frame frequency.
0Ah	S bytes	Well-known alias of the root.
0Bh	8 bytes	Long identifier of the root.

Bridge Packet Formats.

Data Packet Format (Type 000).

MAC Header
Bridging Header
LLC Header
LLC Data

Data Required Packet Format (Type 001).

MAC Header
Bridging Header

Hello Packet Format (Type 010).

MAC Header	
Bridging Header	
Cost-to-root	1 byte (0xFF = infinity)
Decendant Count	1 byte
Next Hello	1 byte
bit 7-2 seed	6-bit randomization seed.
bit 1-0 hello offset	00-10 = offset in slots from calculated hello time. 11 = hello time not calculated.
Priority	1 byte
bit 7-6 reserved	(must be zero)
bit 5-3 user priority	000 = no priority 111 = highest priority
bit 2-0 device priority	000 = no priority 111 = highest priority
Optional fields	N bytes
8-byte Root ID	
Pending Message List	
Decendant List	
Detached List	
Load Indicator	

Attach Packet Format (Type 011).

MAC Header	
Bridging Header	
Attach Parms	1 byte
bit 7-3 reserved	(must be zero)
bit 2-0 hello save count	000-110 = save a message 0 to 6 hello times for the attaching child.
Optional Attach Parms	N bytes
decendant list	
LLC message unit	

Detach Packet Format (Type 100).

MAC Header	
Bridging Header	
Optional Detach Parms	N bytes
decendant list	
forward list	

Address Resolution Packet Format (Type 101).*

MAC Header	
Bridging Header	
ARP Operation	1 byte
bit 2-4 (reserved)	must be zero
bit 3-0 status code	0 = ok, other = error code
Network Address	2 bytes
Long ID length	1 byte
Long ID type	1 byte
Long ID	N bytes

*The Long ID can be a 8-byte identifier or an Alias. The address server will set the network address field to the network address of the associated node. If the Long ID (or Alias) cannot be found the network address field will be set to all 1's.

Reverse Address Resolution Packet Format (Type 110).*

MAC Header	
Bridging Header	
RARP Operation	1 byte
bit 7 New Alias	1 = replace existing Alias
bit 6 New Long ID	1 = replace existing Long ID
bit 5 (reserved)	must be zero
bit 3-0 status code	0 = ok, other = error code
Network Address	2 bytes
Long ID length (8)	1 byte
Long ID type (02h)	1 byte
Long ID	N bytes
Alias length	1 byte
Alias type (07h)	1 byte
Alias	N bytes

*The requesting node must set the Long ID field and/or the Alias field. The source bridge address must be set to the source node type and a node ID of all 1's. The address server will set the network address field to the next available 16-bit address. If an address is not available, the field will be set to all 1's.

What is claimed is:

1. In a mobile communication device, a method of beginning a data communication between the mobile communication device and a communication network, the method comprising:

selecting between a plurality of alternative medium access techniques for the data communication;

waiting a period of time that is at least as long as a predetermined time period and determining that a wireless communication channel is available for communication;

after said waiting and determining, attempting, over the wireless communication channel, to initiate data communication to the communication network;

determining whether the attempt to initiate data communication to the communication network was successful by, at least in part, receiving a message from the communication network indicating that the mobile communication device is to wait for another message from the communication network before communicating data to the communication network; and

if the attempt to initiate data communication to the communication network was successful, then transmitting a series of packets to the communication network, where each two consecutive packet transmissions are separated by no more than the predetermined time period.

2. The method of claim 1, wherein determining that a wireless communication channel is available for communication comprises sensing the wireless communication channel during the predetermined time period.

3. The method of claim 1, wherein determining that a wireless communication channel is available for communication comprises sensing the wireless communication channel during the predetermined time period and detecting no communication occurring on the wireless communication channel throughout the entire predetermined time period.

4. The method of claim 1, wherein the predetermined time period is a maximum expected interpoll gap.

5. The method of claim 1, further comprising communicating messages to and from the communication network over the wireless communication channel.

6. The method of claim 1, further comprising communicating messages to and from the communication network utilizing time division duplexing on the same frequency.

7. The method of claim 1, wherein attempting, over the wireless communication channel, to initiate data communication to the communication network comprises transmitting a message to the communication network over the wireless communication channel requesting allocation of communication bandwidth to the mobile communication device for the data communication.

8. The method of claim 7, wherein transmitting a message to the communication network over the wireless communication channel comprises transmitting the message to the communication network over the wireless communication channel using a contention-based medium access protocol.

9. The method of claim 7, wherein the transmitted message comprises a request for poll (RFP) message.

10. The method of claim 1, wherein each two consecutive packet transmissions of the series of transmitted packets are started at respective start times separated by the predetermined time period.

11. The method of claim 1, wherein transmitting the series of packets comprises transmitting the series of packets on the wireless communication channel.

12. The method of claim 1, further comprising receiving at least one control packet from the communication network between transmission of each of the packets of the transmitted series of packets.

13. The method of claim 1, wherein selecting between a plurality of alternative medium access techniques for data communication comprises selecting between the plurality of alternative medium access techniques based, at least in part, on information received from the communication network.

14. The method of claim 1, wherein selecting between a plurality of alternative medium access techniques for data communication comprises selecting between the plurality of alternative medium access techniques based, at least in part, on amount of available communication resources.

15. The method of claim 14, wherein selecting between the plurality of alternative medium access techniques based, at least in part, on available communication resources comprises selecting between the plurality of alternative medium access techniques based, at least in part, on base station loading.

16. The method of claim 1, wherein the plurality of medium access techniques comprises a first medium access technique and a second medium access technique, the first and second medium access techniques characterized by different respective time delays to gaining access to communication bandwidth for data transmission.

17. The method of claim 1, wherein the plurality of medium access techniques comprises a first contention-based medium access technique and a second contention-based medium access technique different from the first contention-based medium access technique.

18. The method of claim 1, wherein at least one of the plurality of medium access techniques comprises immediately attempting to initiate data communication to the communication network if communication traffic is below a threshold.

19. The method of claim 1, wherein at least one of the plurality of medium access techniques comprises immediately attempting to initiate data communication to the communication network if communication traffic is below a threshold and the mobile communication device does not sense activity on the wireless communication channel.

20. The method of claim 1, wherein at least one of the plurality of medium access techniques comprises if the beginning of the predetermined time period coincides with the end of a detected transmission, then attempting to avoid collisions by delaying a random period before attempting to initiate data communication to the communication network.

21. In a mobile communication device, a method of beginning a data communication between the mobile communication device and a communication network, the method comprising:

selecting a parent node of the communication network from a list of alternate parents;

after selecting a parent node, selecting between a plurality of alternative medium access techniques for the data communication;

waiting a period of time that is at least as long as a predetermined time period and determining that a wireless communication channel is available for communication;

after said waiting and determining, attempting, over the wireless communication channel, to initiate data communication to the communication network;

determining whether the attempt to initiate data communication to the communication network was successful by, at least in part, receiving a message from the communication network indicating that the mobile communication device is to wait for another message from the communication network before communicating data to the communication network; and

if the attempt to initiate data communication to the communication network was successful, then transmitting a series of packets to the communication network where each two consecutive packet transmissions are separated by no more than the predetermined time period.

22. In a mobile communication device, a method of beginning a data communication between the mobile communication device and a communication network, the method comprising:

waking from a sleep state to receive a message from the communication network;

after waking, selecting between a plurality of alternative medium access techniques for the data communication;

waiting a period of time that is at least as long as a predetermined time period and determining that a wireless communication channel is available for communication;

after said waiting and determining, attempting, over the wireless communication channel to initiate data communication to the communication network;

determining whether the attempt to initiate data communication to the communication network was successful by, at least in part, receiving a message from the communication network indicating that the mobile communication device is to wait for another message from the communication network before communicating data to the communication network; and

if the attempt to initiate data communication to the communication network was successful, then transmitting a series of packets to the communication network where each two consecutive packet transmissions are separated by no more than the predetermined time period.

23. A mobile communication device comprising one or more components that operate to begin a data communication between the mobile communication device and a communication network, wherein the one or more components operate to, at least:

select between a plurality of alternative medium access techniques for the data communication;

wait a period of time that is at least as long as a predetermined time period and determine that a wireless communication channel is available for communication;

after said waiting and determining, attempt, over the wireless communication channel, to initiate data communication to the communication network;

determine whether the attempt to initiate data communication to the communication network was successful by, at least in part, receiving a message from the communication network indicating that the mobile communication device is to wait for another message from the communication network before communicating data to the communication network; and

if the attempt to initiate data communication to the communication network was successful, then transmit a series of packets to the communication network, where each two consecutive packet transmissions are separated by no more than the predetermined time period,

wherein the one or more components comprise one or both of a non-transitory computer-readable medium and electrical hardware.

24. A mobile communication device comprising one or more components that operate to begin a data communication between the mobile communication device and a communication network, wherein the one or more components operate to, at least:

select a parent node of the communication network from a list of alternate parents;

after selecting a parent node, select between a plurality of alternative medium access techniques for the data communication;

wait a period of time that is at least as long as a predetermined time period and determine that a wireless communication channel is available for communication;

after said waiting and determining, attempt, over the wireless communication channel, to initiate data communication to the communication network;

determine whether the attempt to initiate data communication to the communication network was successful by, at least in part, receiving a message from the communication network indicating that the mobile communication device is to wait for another message from the communication network before communicating data to the communication network; and

if the attempt to initiate data communication to the communication network was successful, then transmit a series of packets to the communication network where each two consecutive packet transmissions are separated by no more than the predetermined time period,

wherein the one or more components comprise one or both of a non-transitory computer-readable medium and electrical hardware.

25. A mobile communication device comprising one or more components that operate to begin a data communication between the mobile communication device and a communication network, wherein the one or more components operate to, at least:

wake from a sleep state to receive a message from the communication network;

after waking, select between a plurality of alternative medium access techniques for the data communication;

wait a period of time that is at least as long as a predetermined time period and determine that a wireless communication channel is available for communication;

after said waiting and determining, attempt, over the wireless communication channel, to initiate data communication to the communication network;

determine whether the attempt to initiate data communication to the communication network was successful by, at least in part, receiving a message from the communication network indicating that the mobile communication device is to wait for another message from the communication network before communicating data to the communication network; and

if the attempt to initiate data communication to the communication network was successful, then transmit a series of packets to the communication network where each two consecutive packet transmissions are separated by no more than the predetermined time period,

wherein the one or more components comprise one or both of a non-transitory computer-readable medium and electrical hardware.

* * * * *

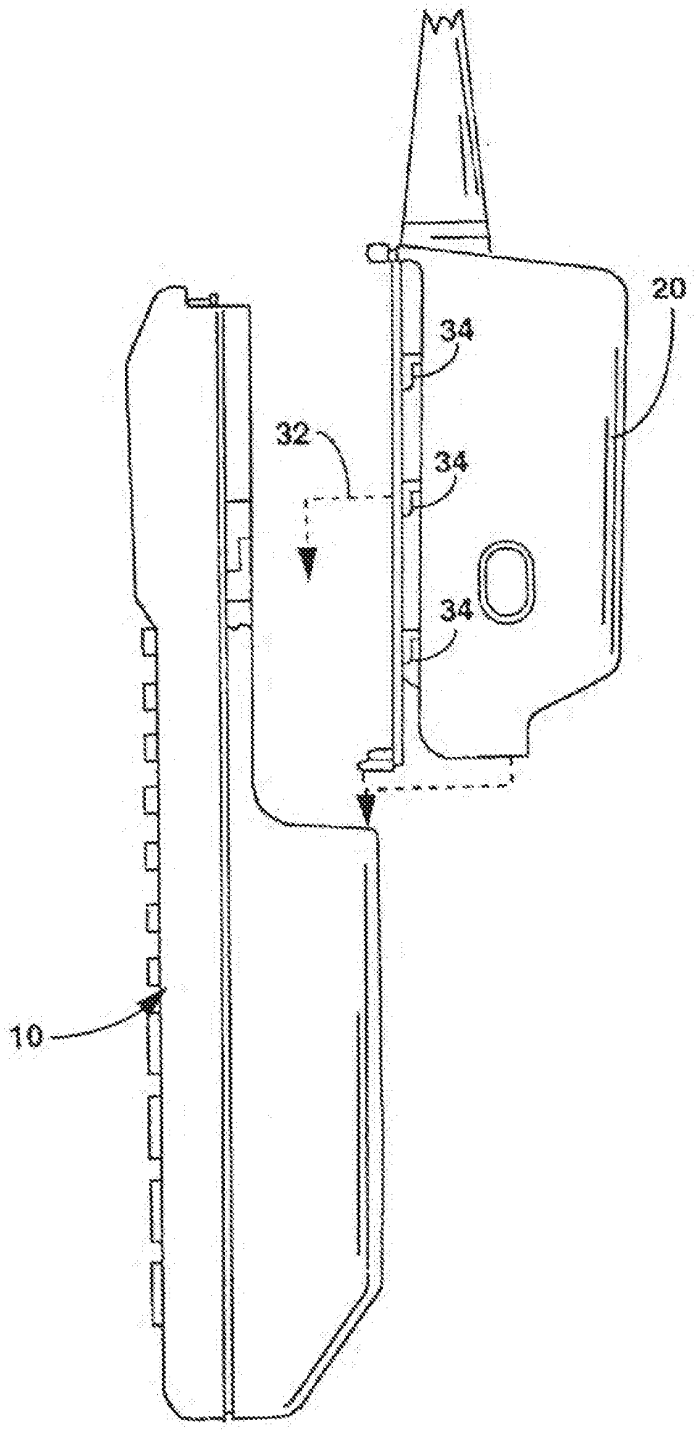

FIG. 4

Exhibit E

US006665536B1

(12) **United States Patent**
Mahany

(10) **Patent No.: US 6,665,536 B1**
(45) **Date of Patent: Dec. 16, 2003**

(54) **LOCAL AREA NETWORK HAVING MULTIPLE CHANNEL WIRELESS ACCESS**

(75) Inventor: **Ronald L. Mahany**, Cedar Rapids, IA (US)

(73) Assignee: **Broadcom Corporation**, Irvine, CA (US)

(*) Notice: Subject to any disclaimer, the term of this patent is extended or adjusted under 35 U.S.C. 154(b) by 0 days.

(21) Appl. No.: **09/357,429**

(22) Filed: **Jul. 20, 1999**

Related U.S. Application Data

(63) Continuation of application No. 08/878,357, filed on Jun. 27, 1997, now Pat. No. 5,960,344, which is a continuation-in-part of application No. 08/772,895, filed on Dec. 24, 1996, now abandoned, which is a continuation-in-part of application No. 08/696,086, filed on Aug. 13, 1996, now abandoned, which is a continuation of application No. 08/238,180, filed on May 4, 1994, now Pat. No. 5,546,397, which is a continuation-in-part of application No. 08/197,392, filed on Feb. 16, 1994, now abandoned, which is a continuation-in-part of application No. 08/170,121, filed on Dec. 20, 1993, now abandoned.

(30) **Foreign Application Priority Data**

Jun. 3, 1996 (WO) PCT/US96/09474

(51) **Int. Cl.**[7] **H04Q 7/00**

(52) **U.S. Cl.** **455/432**; 455/434; 455/435

(58) **Field of Search** 455/432, 434, 455/436, 338, 500, 444, 524, 456, 422, 466, 507, 515, 454, 554, 552; 375/131, 132, 147, 130; 370/350, 389

(56) **References Cited**

U.S. PATENT DOCUMENTS

3,665,164 A	5/1972	Beveridge	235/460
D230,859 S	3/1974	Kanno	D26/56
3,826,900 A	7/1974	Moellering	250/568

(List continued on next page.)

FOREIGN PATENT DOCUMENTS

EP	0194115	9/1986
EP	0262943	4/1988
FR	2389938	1/1979

(List continued on next page.)

OTHER PUBLICATIONS

"PCMCIA Primer" by John Reimer, pp. 66–67, 1995.
PCMCIA (IC) Cards, vol. 13, No. 8.
News Release "Norand Introduces Enhanced Wireless LAN Capabilities", May 16, 1995, by Norand Corporation, Cedar Rapids, Iowa, pp. 1–4.

(List continued on next page.)

Primary Examiner—Salvatore Cangialosi
(74) *Attorney, Agent, or Firm*—McAndrews, Held & Malloy, Ltd.

(57) **ABSTRACT**

A communication network having at least one access point supports wireless communication among a plurality of wireless roaming devices via a first and a second wireless channel. The access point comprises a first and a second transceiver. The first and second transceivers operate on the first and second wireless channels, respectively. Each of the plurality of wireless roaming devices are capable of communicating on the first and second wireless channel. In one embodiment, the first wireless channel is used to exchange data, while the second channel is used to manage such exchanges as well as access to the first channel. In an alternate embodiment, both channels are used to support communication flow, however the first channel supports a protocol that is more deterministic than that of the second channel. Allocation of ones of the plurality of wireless roaming devices from one channel to the next may occur per direction from the access point. It may also result from decisions made by each of the wireless roaming devices made independent of the access point. For example, a decision may be made based on the data type being transferred or based on the current channel load. Such factors may also be used by the access point for allocation determinations. In addition, allocation may be based on the type of roaming device involved, such as allocating peripherals to a slower channel.

55 Claims, 17 Drawing Sheets

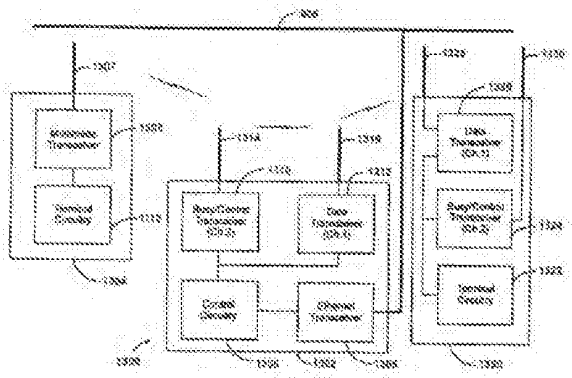

U.S. PATENT DOCUMENTS

3,947,817	A	3/1976	Regia	235/472
3,976,978	A	8/1976	Martin et al.	235/472
4,002,892	A	1/1977	Zielinski	307/150
4,005,400	A	1/1977	Engdahl	340/365 R
4,017,728	A	4/1977	Rowe	235/152
4,020,523	A	5/1977	O'Neill	16/110
4,058,838	A	11/1977	Crager et al.	338/257
4,091,270	A	5/1978	Musch et al.	235/419
4,115,870	A	9/1978	Lowell	364/900
4,133,034	A	1/1979	Ener	364/464
4,136,821	A	1/1979	Sugiura et al.	235/462
4,141,492	A	2/1979	Michel et al.	235/437
4,158,130	A	6/1979	Speraw et al.	235/146
4,158,194	A	6/1979	McWaters et al.	235/454
4,168,554	A	8/1979	Fagel	D18/7
4,188,103	A	2/1980	Biber et al.	354/27
4,210,802	A	7/1980	Sakai	235/483
4,247,908	A	1/1981	Lockhart, Jr. et al.	364/900
4,277,837	A	7/1981	Stuckert	364/900
4,282,425	A	8/1981	Chadima et al.	235/462
4,322,612	A	3/1982	Lange	235/419
4,385,285	A	5/1983	Horst et al.	382/3
4,414,661	A	11/1983	Karlstrom	370/95
4,415,065	A	11/1983	Sandstedt	186/39
4,418,277	A	11/1983	Tremmel et al.	235/472
4,422,748	A	12/1983	Hopson	354/105
4,423,319	A	12/1983	Jacobsen	235/419
4,460,120	A	7/1984	Shepard et al.	235/472
4,488,679	A	12/1984	Bockholt et al.	235/400
4,500,776	A	2/1985	Laser	235/162
4,506,344	A	3/1985	Hubbard	364/900
4,511,970	A	4/1985	Okano et al.	364/401
4,519,068	A	5/1985	Karbs et al.	
4,523,087	A	6/1985	Benton	235/379
4,523,297	A	6/1985	Upon et al.	235/380
4,569,421	A	2/1986	Sandstedt	235/383
4,570,057	A	2/1986	Chadima, Jr. et al.	364/708
4,578,571	A	3/1986	Williams	235/472
4,603,262	A	7/1986	Eastman et al.	250/566
4,621,189	A	11/1986	Kumar et al.	235/472
4,627,736	A	12/1986	Komaki	368/88
4,628,193	A	12/1986	Blum	235/375
4,634,845	A	1/1987	Hale et al.	235/350
4,641,292	A	2/1987	Tunnell et al.	381/42
4,654,818	A	3/1987	Wetterau, Jr.	364/900
4,661,993	A	4/1987	Leland et al.	455/103
4,689,761	A	8/1987	Yurchenco	364/708
4,703,161	A	10/1987	McLean	235/1
4,706,086	A	11/1987	Sato	235/488
4,718,103	A	1/1988	Shojima et al.	382/13
4,718,110	A	1/1988	Schaefer	455/90
4,727,245	A	2/1988	Dobbins et al.	235/472
4,734,566	A	3/1988	Senda et al.	235/495
D295,411	S	4/1988	Cho et al.	D14/100
4,743,773	A	5/1988	Katana et al.	250/566
4,749,353	A	6/1988	Breedlove	381/43
4,752,965	A	6/1988	Dunkley	235/379
4,758,717	A	7/1988	Shepard et al.	235/472
4,760,248	A	7/1988	Swartz et al.	235/472
4,761,822	A	8/1988	Maile	455/82
4,766,300	A	8/1988	Chadima, Jr. et al.	235/472
4,768,230	A	8/1988	Viebrantz et al.	455/603
4,773,032	A	9/1988	Uehara	364/900
4,793,812	A	12/1988	Sussman et al.	235/472
D299,234	S	1/1989	Kajita	D14/100
4,825,057	A	4/1989	Swartz	235/472
4,831,275	A	5/1989	Drucker	235/472
4,835,372	A	5/1989	Gombrich	235/375
4,836,256	A	6/1989	Melikoni	206/523
4,837,858	A	6/1989	Ahlay et al.	455/34
4,842,966	A	6/1989	Omori et al.	307/150
4,845,350	A	7/1989	Shepard et al.	235/472
4,850,009	A	7/1989	Zook et al.	235/375
D303,112	S	8/1989	Desrochers	D14/100
4,857,716	A	8/1989	Gombrich et al.	235/462
4,866,646	A	9/1989	Nakamura et al.	364/709.11
4,877,949	A	10/1989	Danielson et al.	235/462
4,881,839	A	11/1989	Grimm	400/692
4,890,832	A	1/1990	Komaki	235/146
4,897,532	A	1/1990	Swartz et al.	235/472
4,910,775	A	3/1990	Yves et al.	235/379
4,916,441	A	4/1990	Gombrich	235/380 X
4,940,974	A	7/1990	Sojka	340/825.08
4,942,356	A	7/1990	Ellingen et al.	361/392
4,953,113	A	8/1990	Chadima, Jr. et al.	364/708
4,967,188	A	10/1990	Collins	340/8.36
4,972,496	A	11/1990	Sklarew	382/13
4,983,818	A	1/1991	Knowles	235/467
4,984,247	A	1/1991	Kaufusan et al.	
5,002,184	A	3/1991	Lloyd	206/305
5,008,879	A	4/1991	Fischer et al.	370/85.2
5,012,407	A	4/1991	Blum	364/200
5,023,824	A	6/1991	Chadima, Jr. et al.	235/462
5,029,181	A	7/1991	Endo et al.	
5,046,086	A	9/1991	Messenger	
5,046,130	A *	9/1991	Hall et al.	455/456
5,049,862	A	9/1991	Dao et al.	340/706
5,049,863	A	9/1991	Oka	340/710
5,057,676	A	10/1991	Komaki	235/375
5,059,778	A	10/1991	Zouzoulas et al.	235/472
5,070,536	A	12/1991	Mahany et al.	455/67
5,097,484	A	3/1992	Akaiwa	
5,101,408	A	3/1992	Messenger et al.	
5,117,501	A	5/1992	Childress et al.	455/11.1
5,142,534	A	8/1992	Simpson et al.	
5,164,942	A	11/1992	Kamerman et al.	
5,181,200	A	1/1993	Harrison	
5,202,817	A	4/1993	Koenck et al.	361/393
5,216,233	A	6/1993	Main et al.	235/472
5,218,187	A	6/1993	Koenck et al.	235/375
5,227,614	A	7/1993	Danielson et al.	235/380
5,268,933	A	12/1993	Averbuch	
5,291,516	A	3/1994	Dixon et al.	
5,297,144	A	3/1994	Gilbert et al.	
5,321,542	A	6/1994	Freitas et al.	
5,363,401	A *	11/1994	Lucas et al.	375/131
5,363,402	A	11/1994	Harmon et al.	
5,390,166	A	2/1995	Rohani et al.	
5,390,206	A *	2/1995	Rein et al.	375/130
5,404,375	A	4/1995	Krueger et al.	
5,410,141	A	4/1995	Koenck et al.	235/472
5,410,740	A	4/1995	Hagstrom	
5,410,752	A	4/1995	Schofield	
5,465,392	A	11/1995	Baptist et al.	
5,469,468	A	11/1995	Schilling	375/130
5,513,184	A *	4/1996	Vannucci	370/350
5,546,397	A	8/1996	Mahany	
5,551,060	A *	8/1996	Fujii et al.	455/444
5,561,845	A *	10/1996	Bendixen et al.	455/434
5,644,576	A *	7/1997	Bauchot et al.	375/131
5,655,219	A *	8/1997	Jusa et al.	455/338
5,734,645	A *	3/1998	Raith et al.	455/466
5,748,621	A	5/1998	Masuda et al.	370/337
5,768,267	A *	6/1998	Raith et al.	370/329
5,790,587	A *	8/1998	Smith et al.	375/147
5,844,893	A	12/1998	Gollnick et al.	370/329
5,960,344	A *	9/1999	Mahany	455/432
6,118,824	A	9/2000	Smith et al.	375/259
6,138,010	A	10/2000	Bahe et al.	455/426
6,185,205	B1 *	2/2001	Sharrit et al.	370/389

FOREIGN PATENT DOCUMENTS

GB	1572962	8/1980
GB	2201129	8/1988
JP	58176792	10/1983
JP	58-211261	12/1983
JP	2-144681	6/1990
WO	8700639	1/1987
WO	8707106	11/1987

OTHER PUBLICATIONS

News Release "Ositech Communications Inc. Will Release Next Month the Jack of Diamonds, A Type II PC Card", dated May 31, 1995.

Roger C. Alford, "The PCMCIA Redefines Portability", Under The Hood, 1995.

Gary Legg, "Special Components Simplified Interface to PCMCIA cards", Jun. 10, 1993 EN., pp. 61, 63–64, 66 and 68.

Carole Patton, "Radio Transceiver Circuit Card Acts as Wireless Modem in PCs", Info World, Mar. 28, 1988, p. 18.

John R. Gyorki, "New Deal For Smart Cards", Machine Design, Jan. 1, 1993, pp. 38–40, 42 and 44.

* cited by examiner

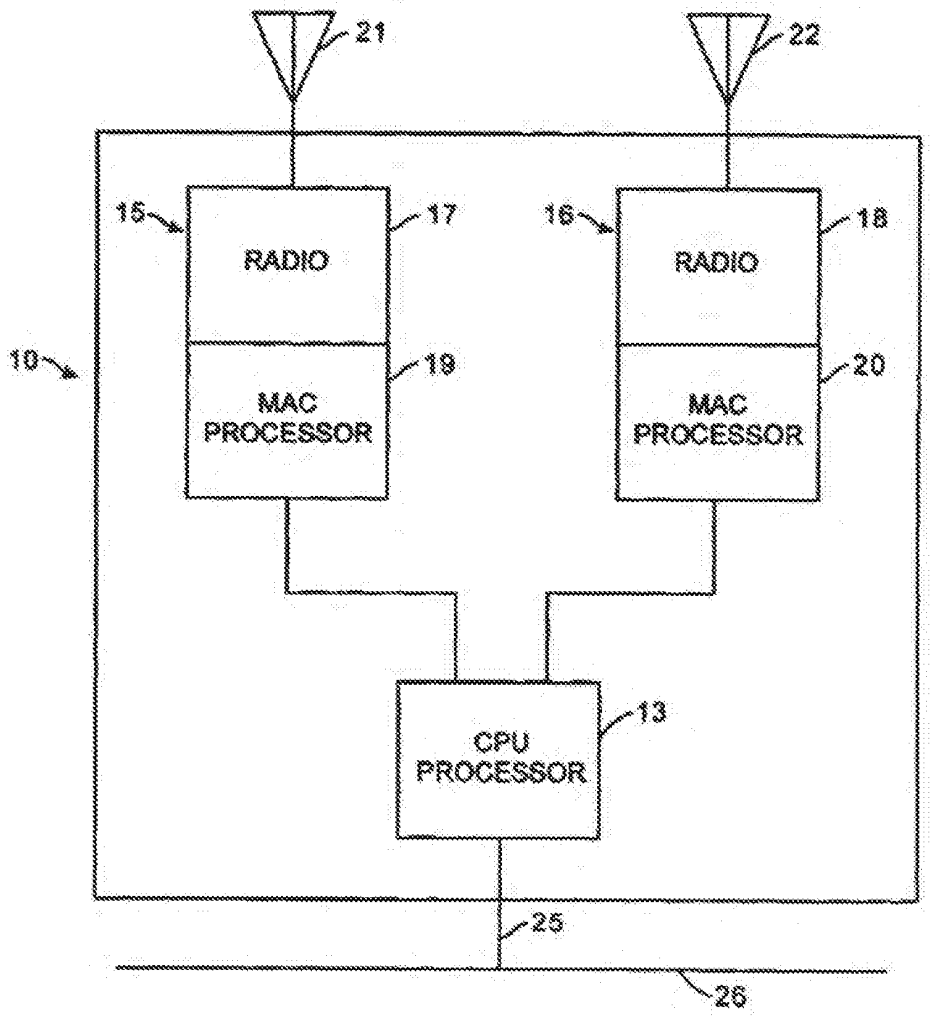
21
22
15
17
16
18
RADIO
RADIO
10
19
20
MAC PROCESSOR
MAC PROCESSOR
13
CPU PROCESSOR
25
26

Fig. 1

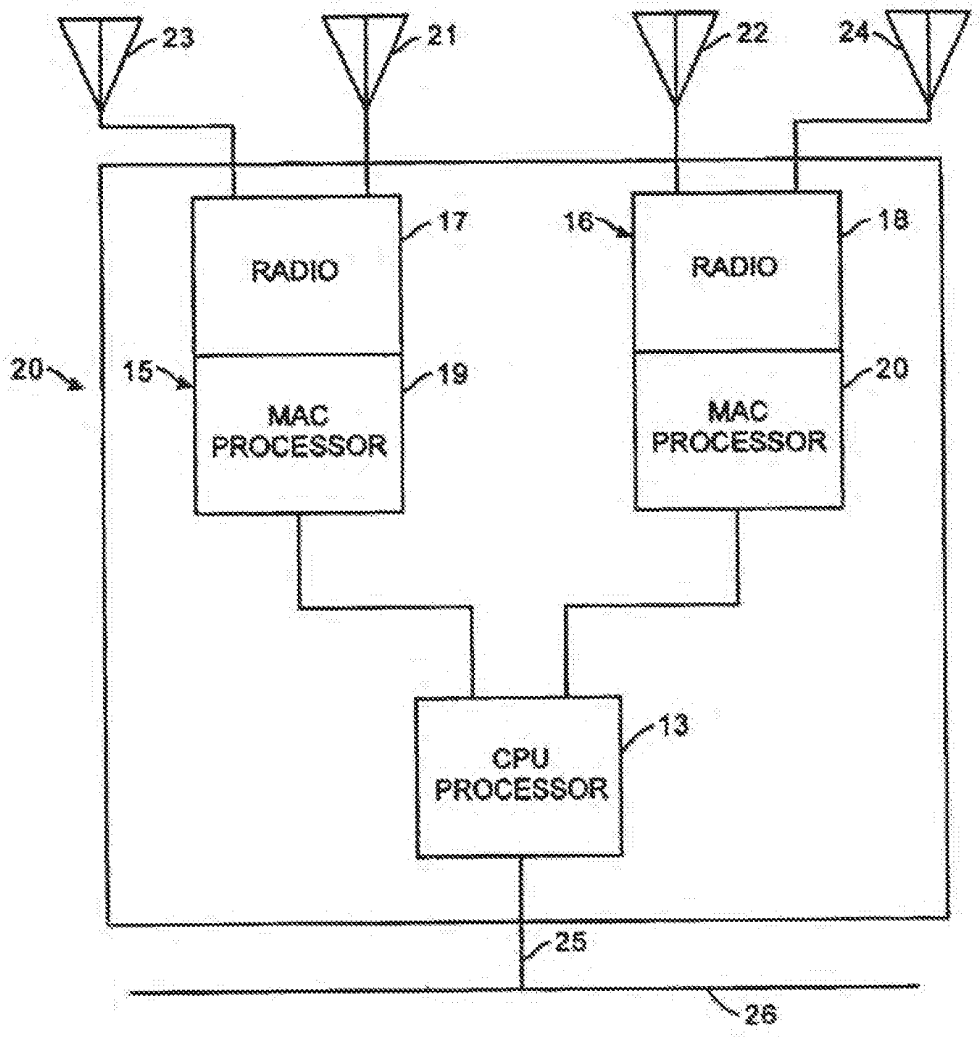
23
21
22
24
17
16
18
RADIO
RADIO
20
15
19
20
MAC PROCESSOR
MAC PROCESSOR
13
CPU PROCESSOR
25
26

Fig. 2

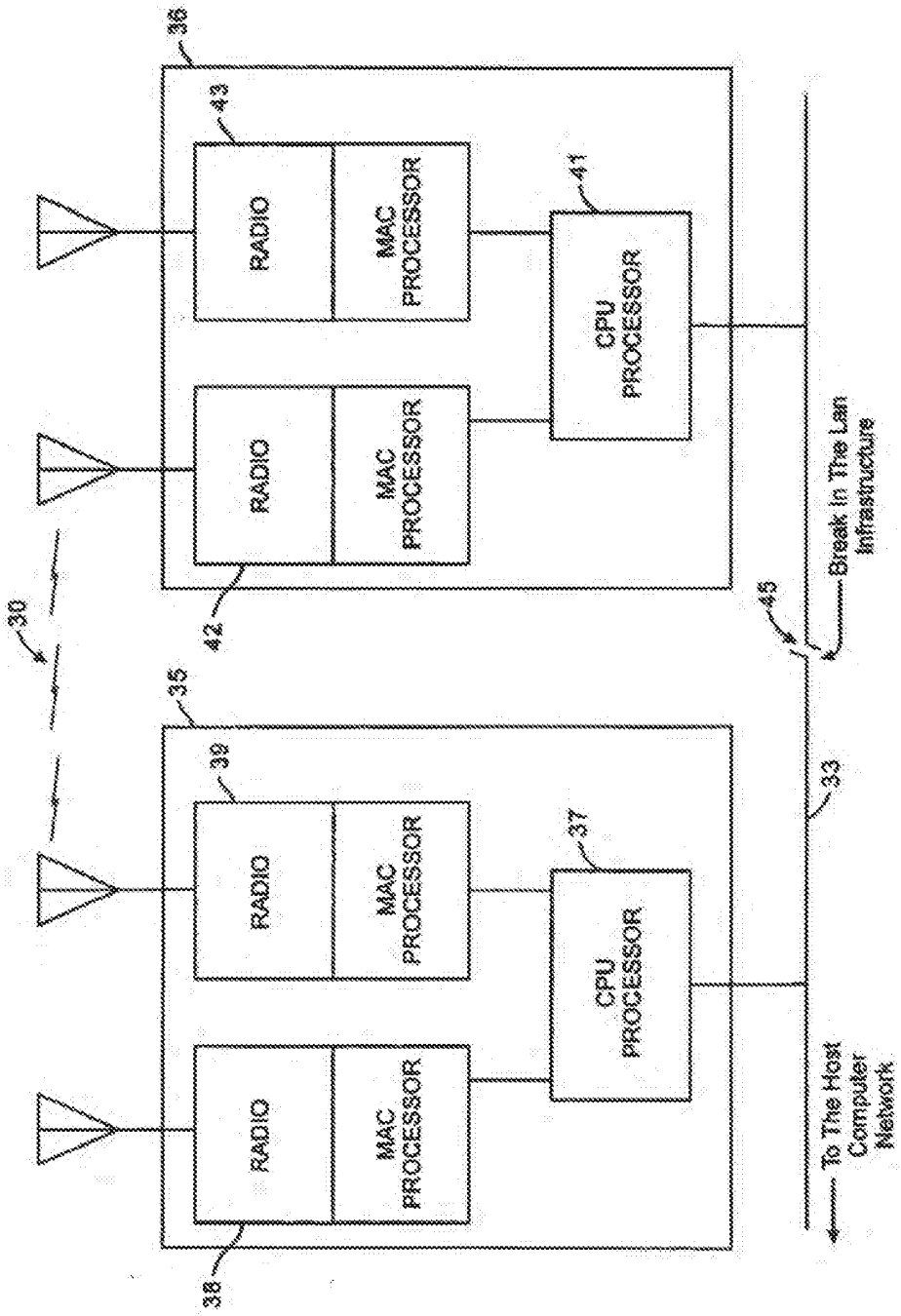
36
43
RADIO
MAC PROCESSOR
41
CPU PROCESSOR
RADIO
MAC PROCESSOR
42
30
35
39
RADIO
MAC PROCESSOR
37
CPU PROCESSOR
RADIO
MAC PROCESSOR
38
45
Break In The Lan Infrastructure
33
To The Host Computer Network

Fig.3

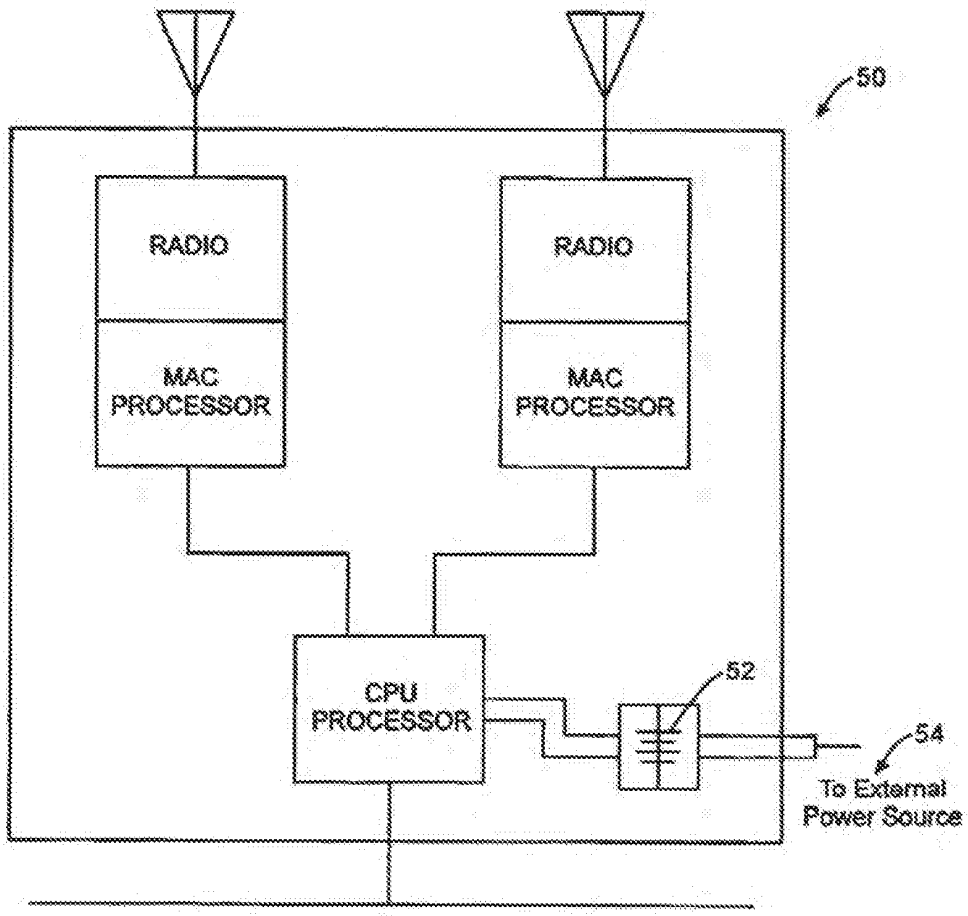
50
RADIO
MAC PROCESSOR
RADIO
MAC PROCESSOR
CPU PROCESSOR
52
54
To External Power Source

Fig. 4

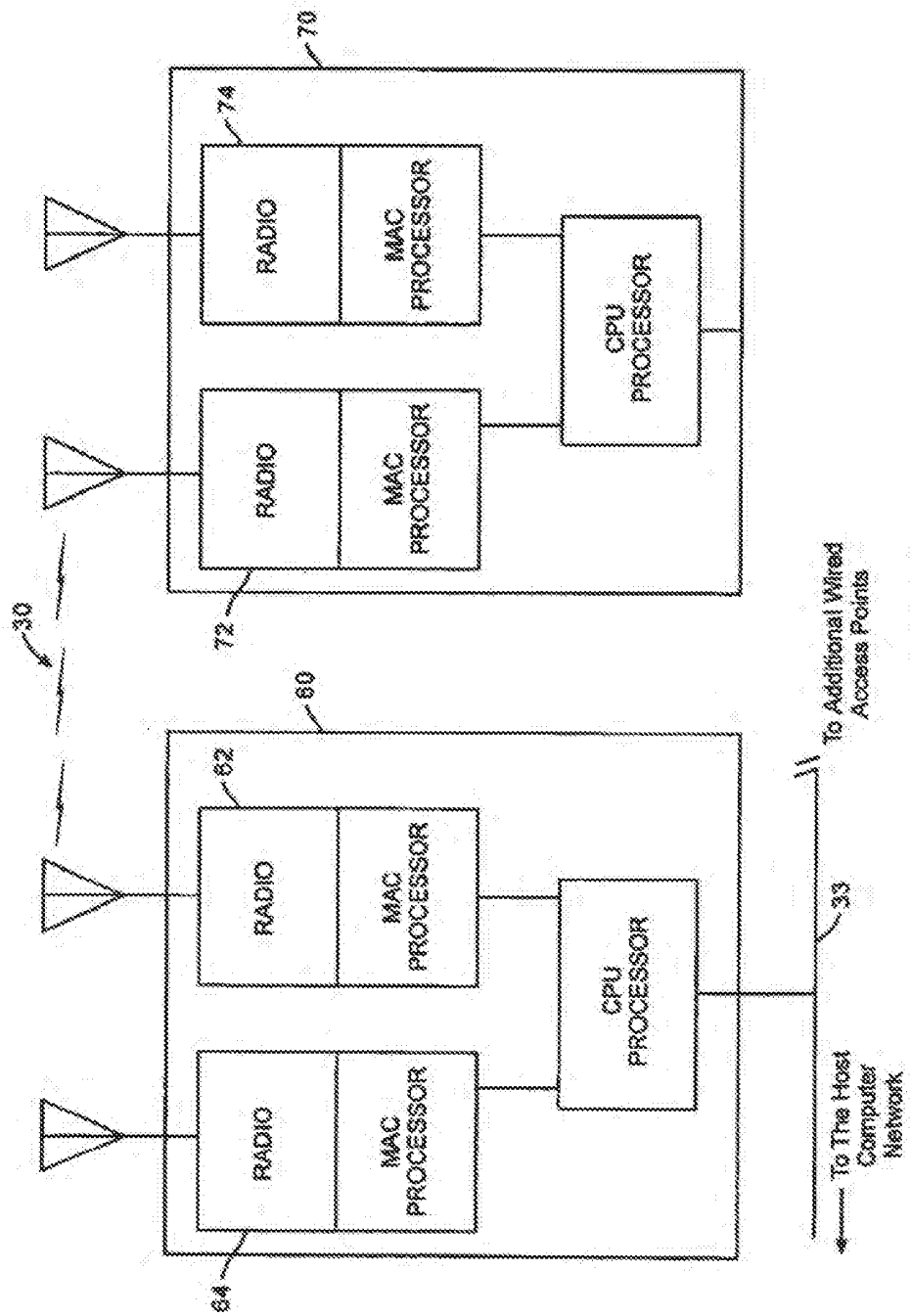
70
74
RADIO
MAC PROCESSOR
CPU PROCESSOR
RADIO
MAC PROCESSOR
72
30
60
62
RADIO
MAC PROCESSOR
CPU PROCESSOR
RADIO
MAC PROCESSOR
64
To Additional Wired Access Points
33
To The Host Computer Network

Fig.5

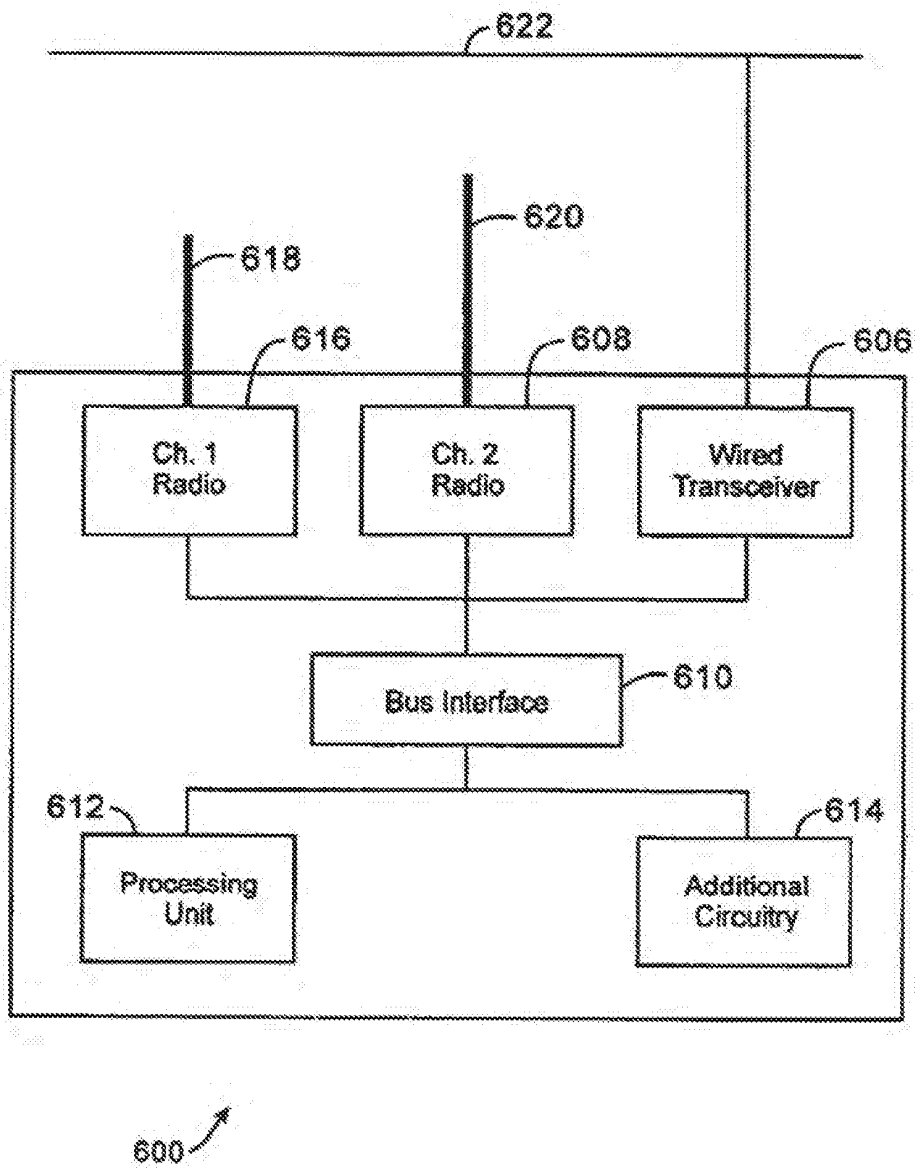
622
620
618
616
608
606
Ch. 1 Radio
Ch. 2 Radio
Wired Transceiver
Bus Interface
610
612
614
Processing Unit
Additional Circuitry
600

Fig. 6

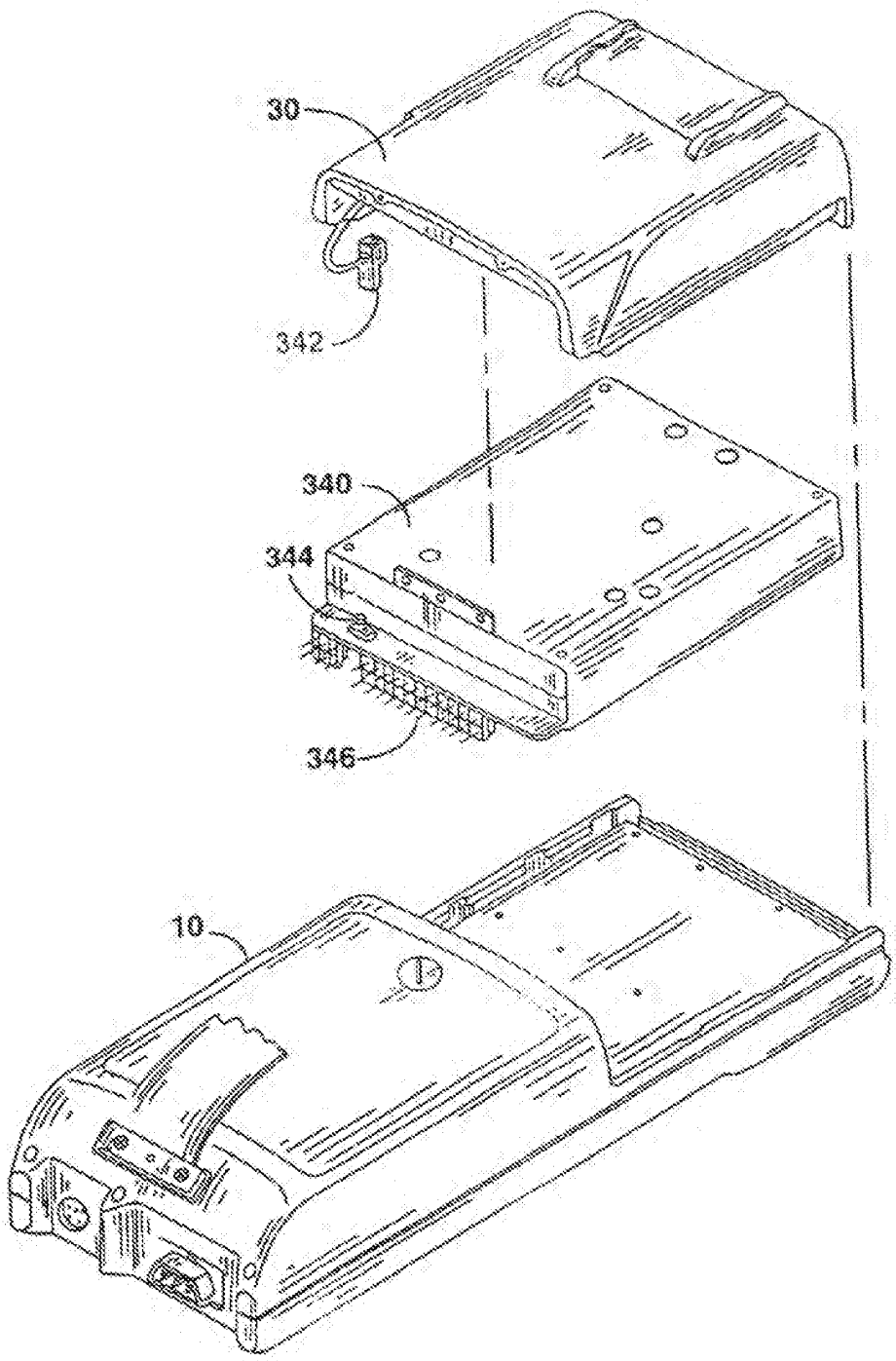

FIG. 4A

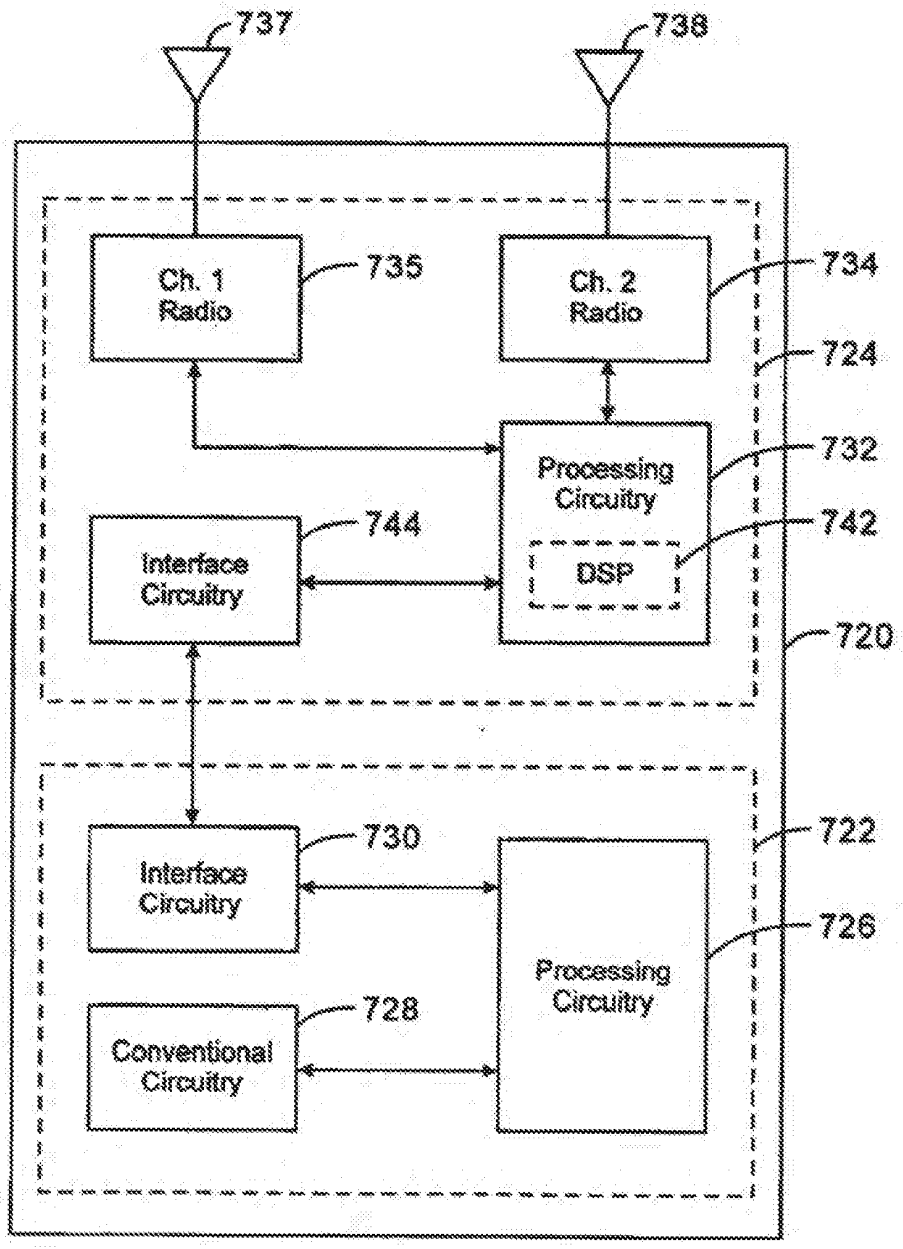
737
738
Ch. 1 Radio
735
Ch. 2 Radio
734
724
Processing Circuitry
732
Interface Circuitry
744
DSP
742
720
Interface Circuitry
730
722
Processing Circuitry
726
Conventional Circuitry
728

Fig. 7a

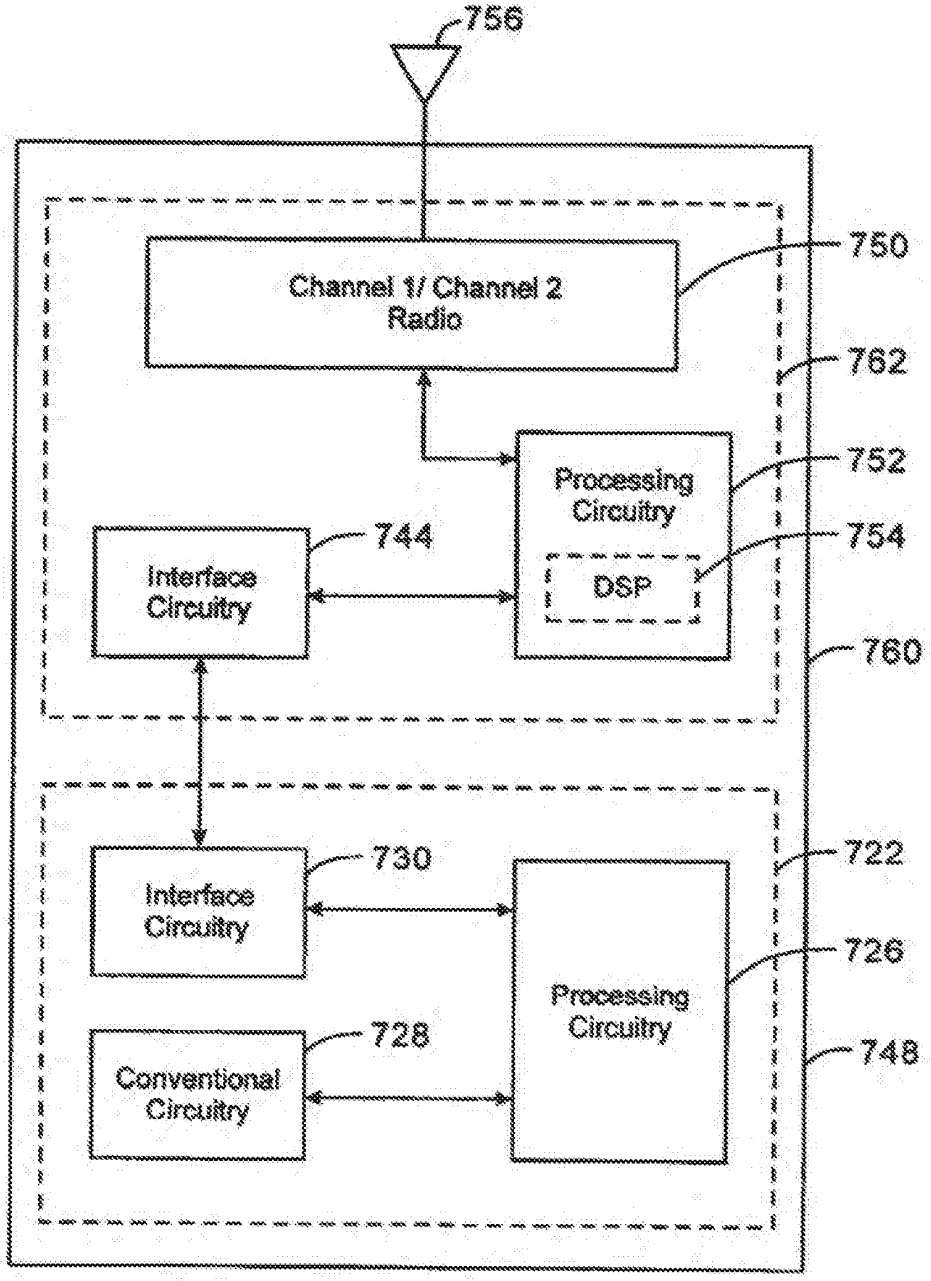
756
Channel 1/ Channel 2
Radio
750
762
Processing
Circuitry
752
754
DSP
Interface
Circuitry
744
760
Interface
Circuitry
730
722
726
Processing
Circuitry
Conventional
Circuitry
728
748

Fig. 7b

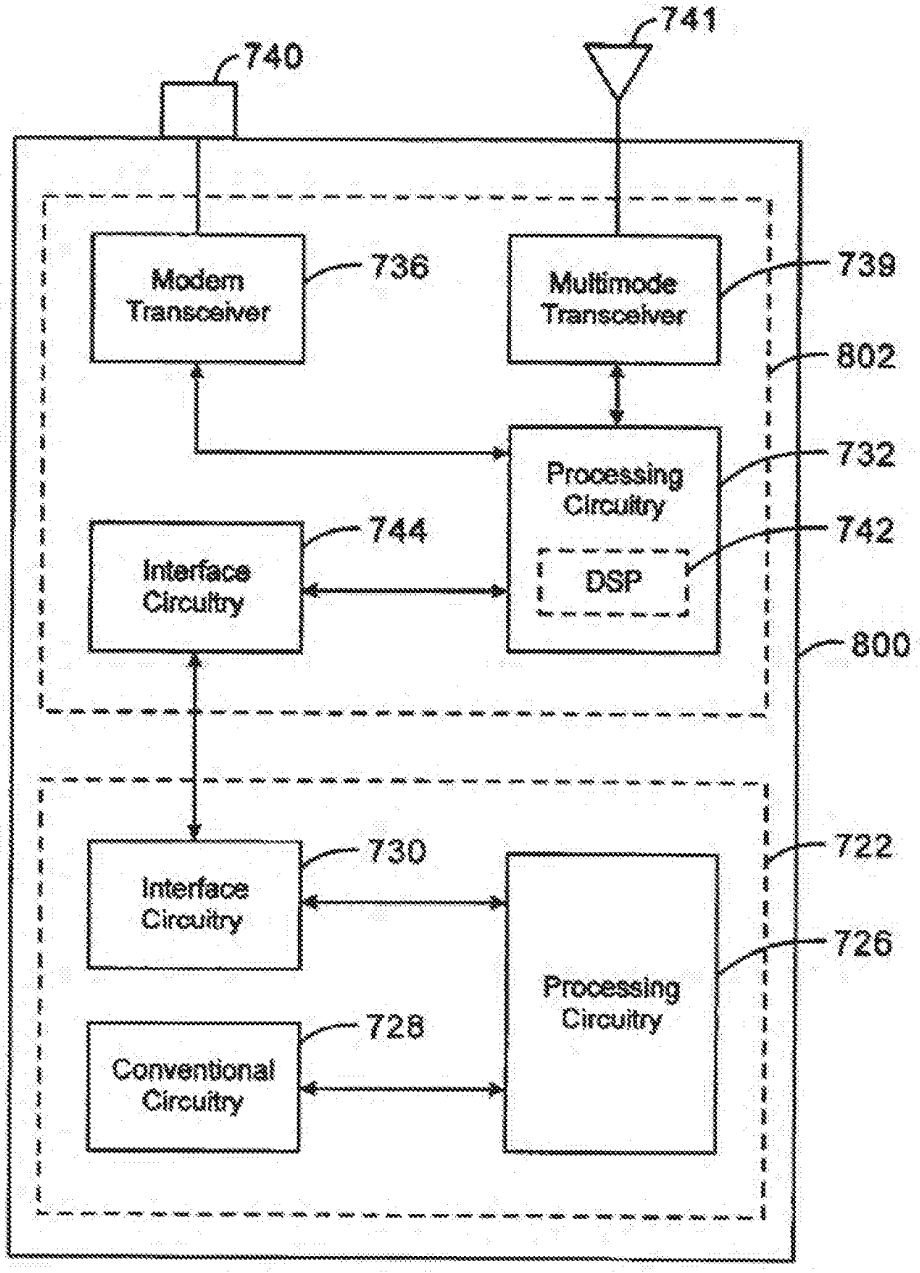
741
740
Modem Transceiver
736
Multimode Transceiver
739
802
Processing Circuitry
732
Interface Circuitry
744
DSP
742
800
Interface Circuitry
730
722
Processing Circuitry
726
Conventional Circuitry
728

Fig. 8

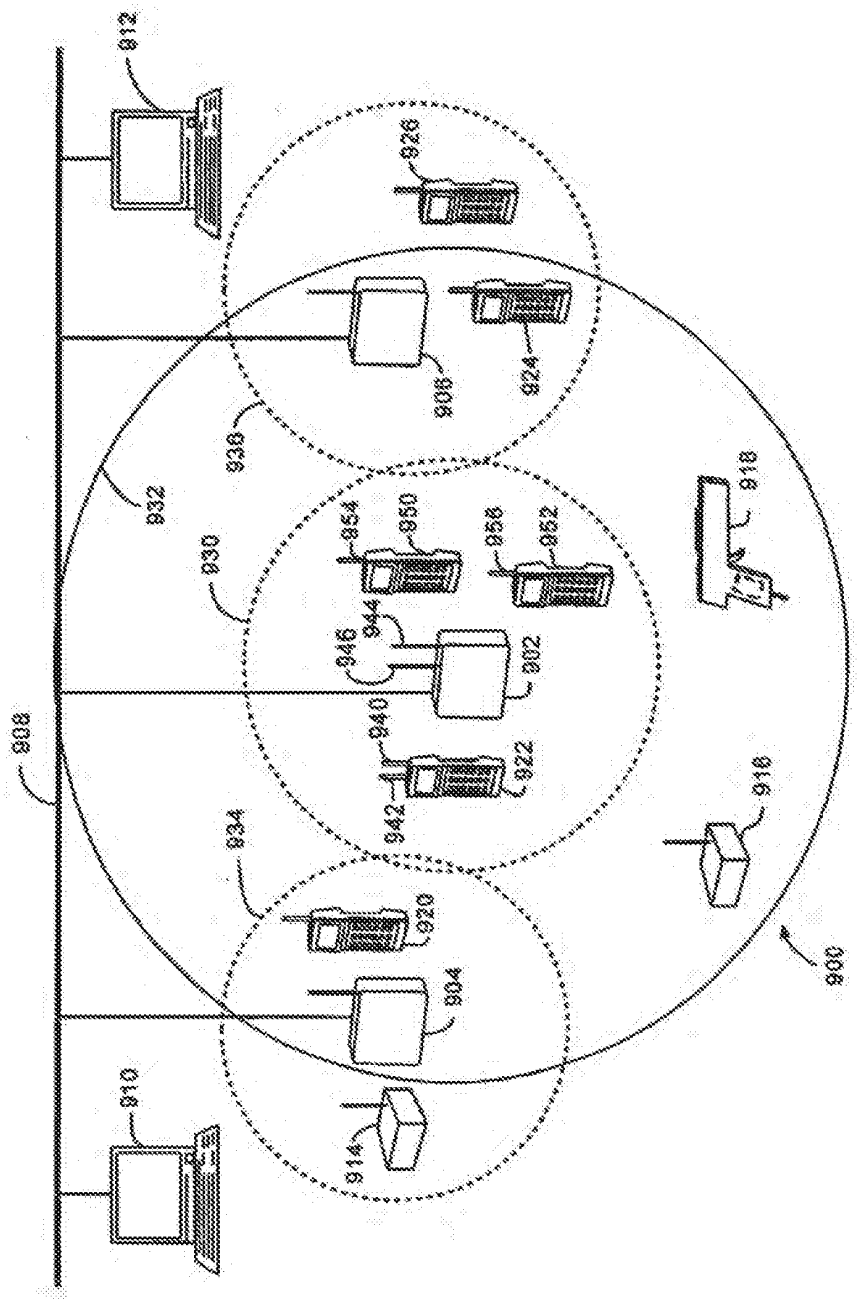
900
902
904
906
908
910
912
914
916
918
920
922
924
926
928
930
932
934
936
938
940
942
944
946
948
950
952
954

Fig.9

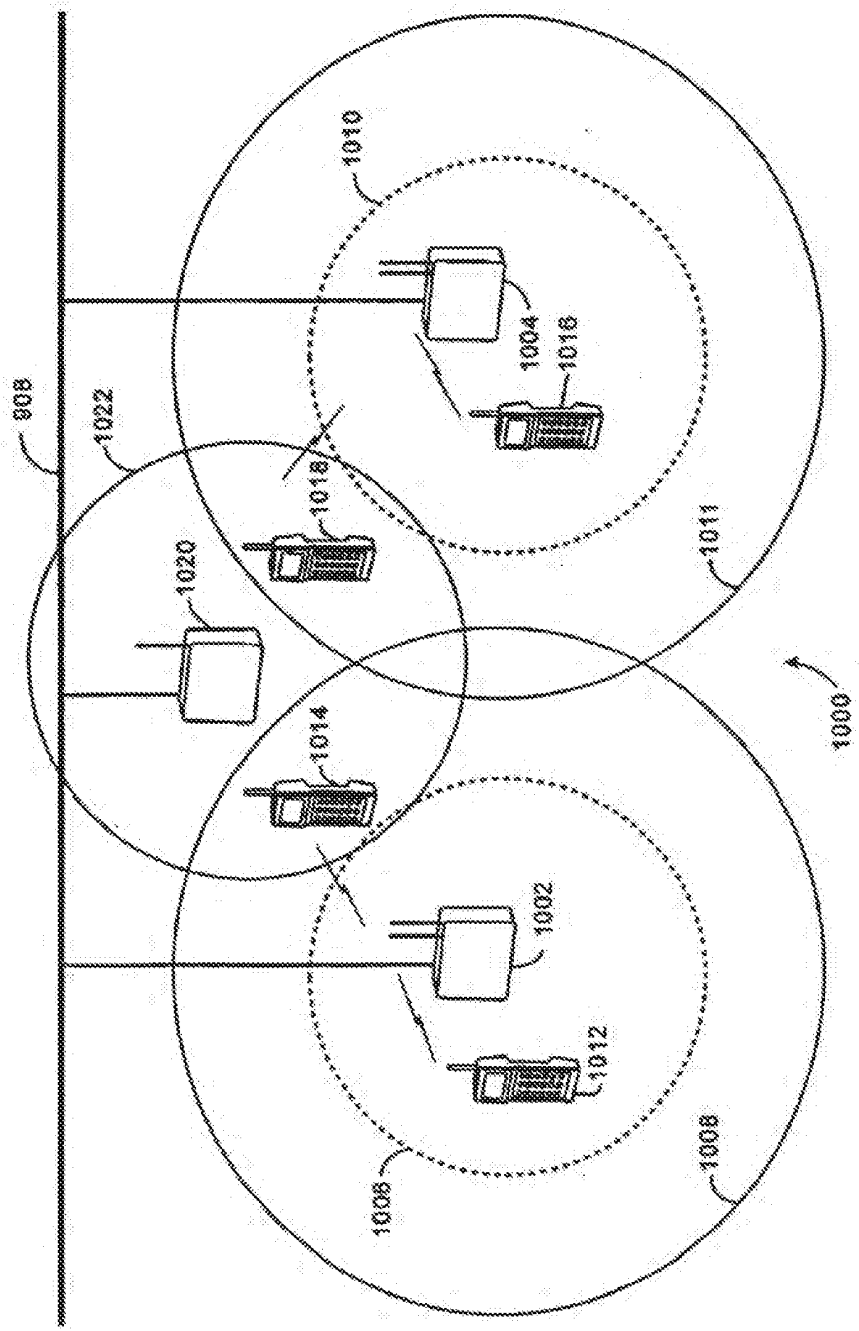
808
1022
1020
1018
1014
1010
1004
1016
1002
1012
1006
1008
1011
1000

Fig.10

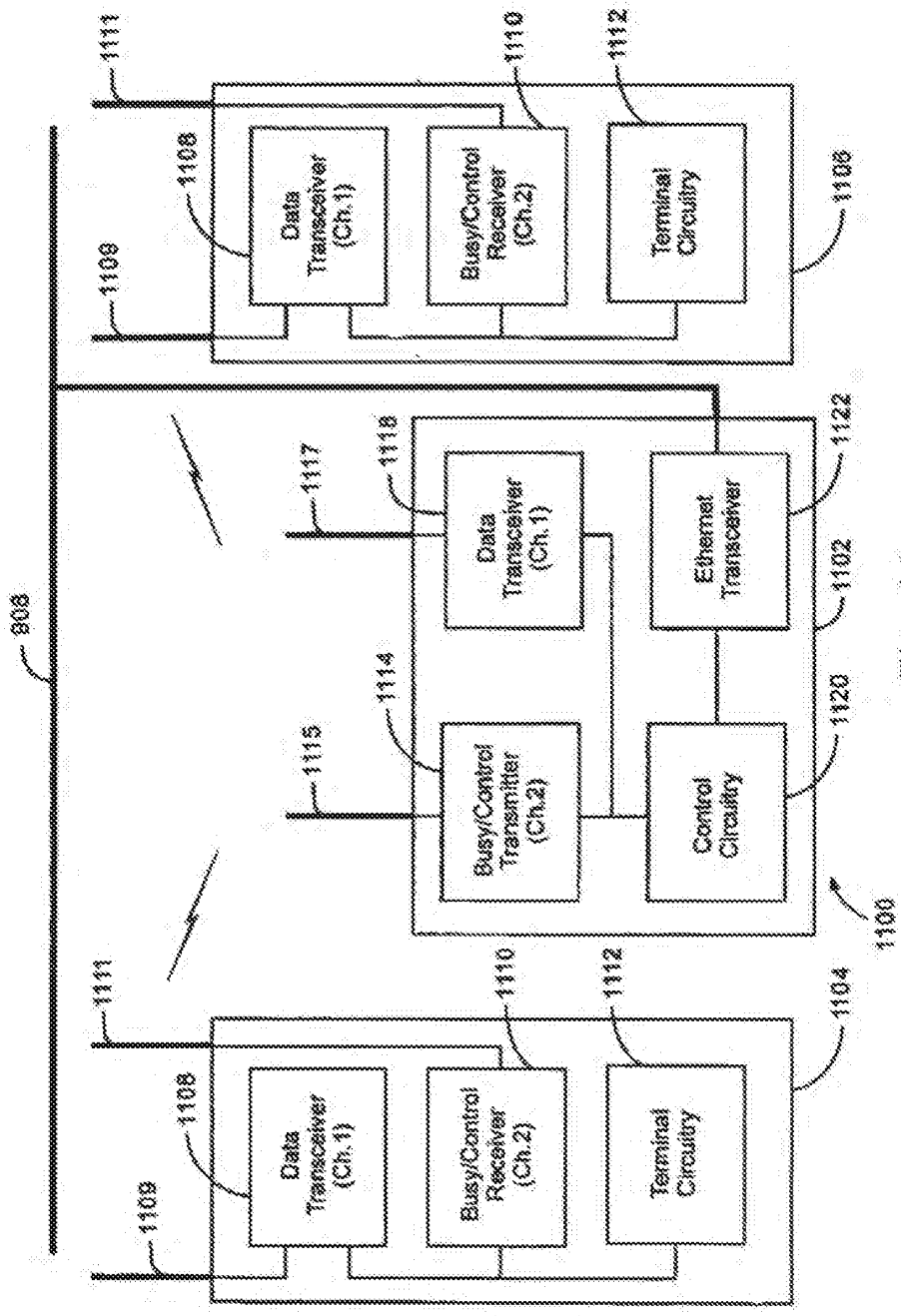
808
1111
1109
1108
Data Transceiver (Ch.1)
1110
Busy/Control Receiver (Ch.2)
1112
Terminal Circuitry
1104
1117
1118
Data Transceiver (Ch.1)
1122
Ethernet Transceiver
1102
1115
1114
Busy/Control Transmitter (Ch.2)
Control Circuitry
1120
1100

Fig. 11

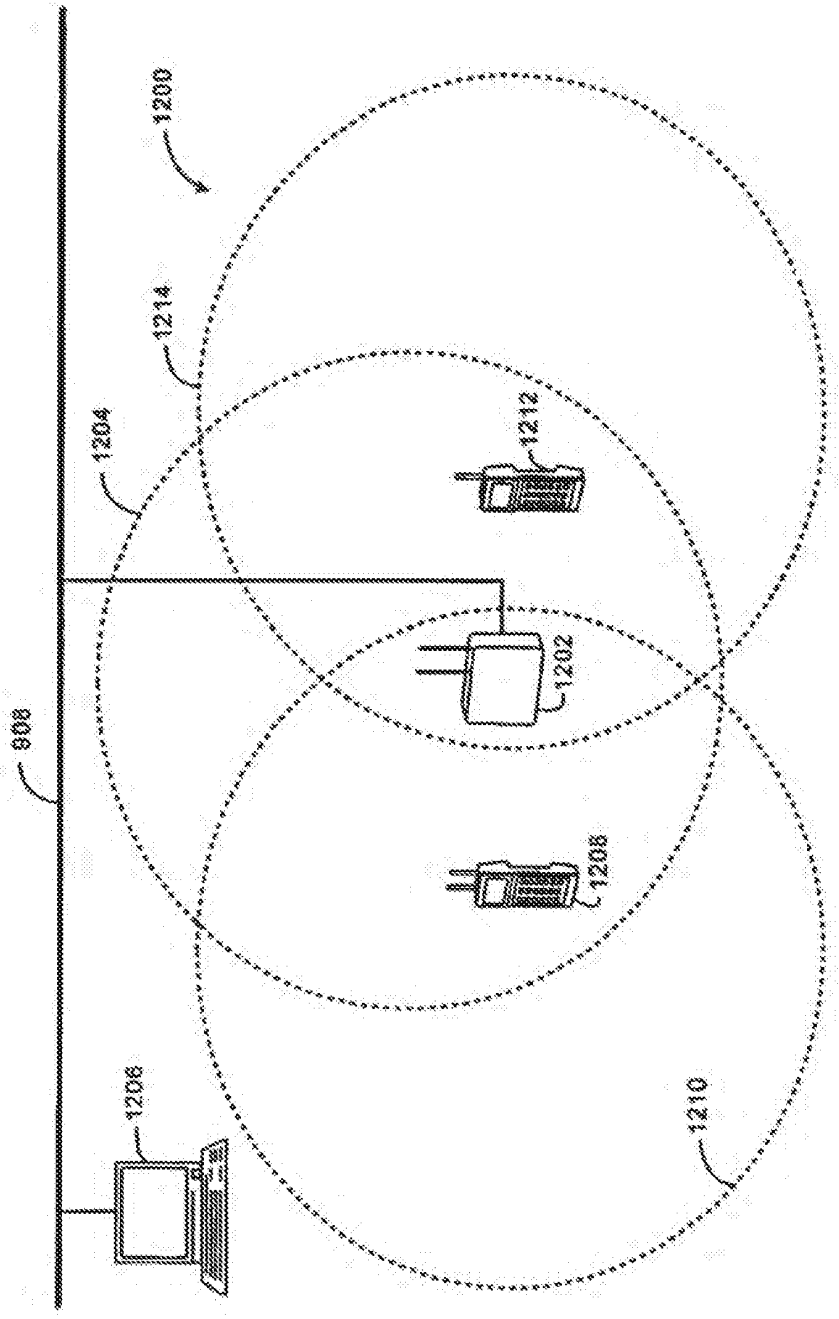

Fig.12

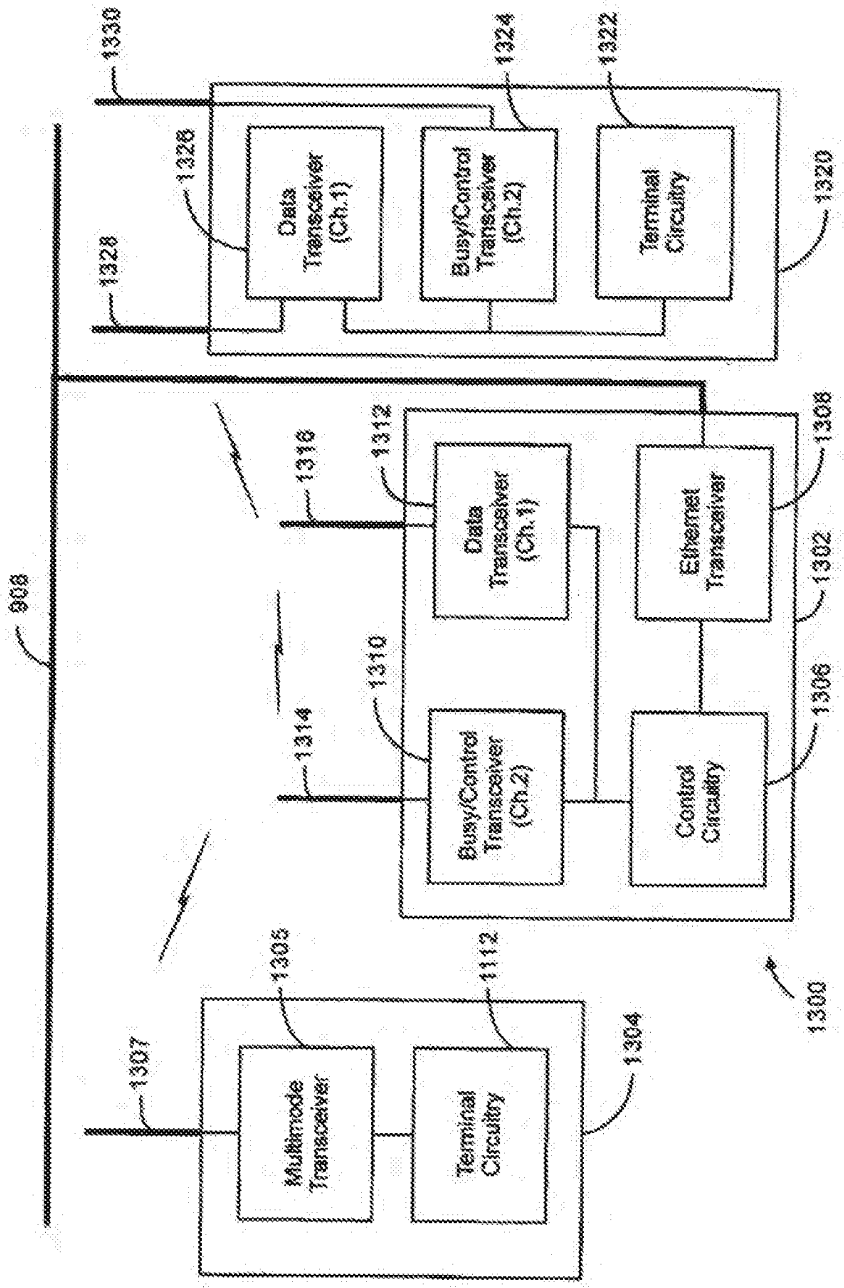
908
1330
1328
1326
Data Transceiver (Ch.1)
1324
Busy/Control Transceiver (Ch.2)
1322
Terminal Circuitry
1320
1316
1312
Data Transceiver (Ch.1)
1308
Ethernet Transceiver
1302
1314
1310
Busy/Control Transceiver (Ch.2)
Control Circuitry
1306
1300
1307
1305
Multimode Transceiver
1112
Terminal Circuitry
1304

Fig. 13

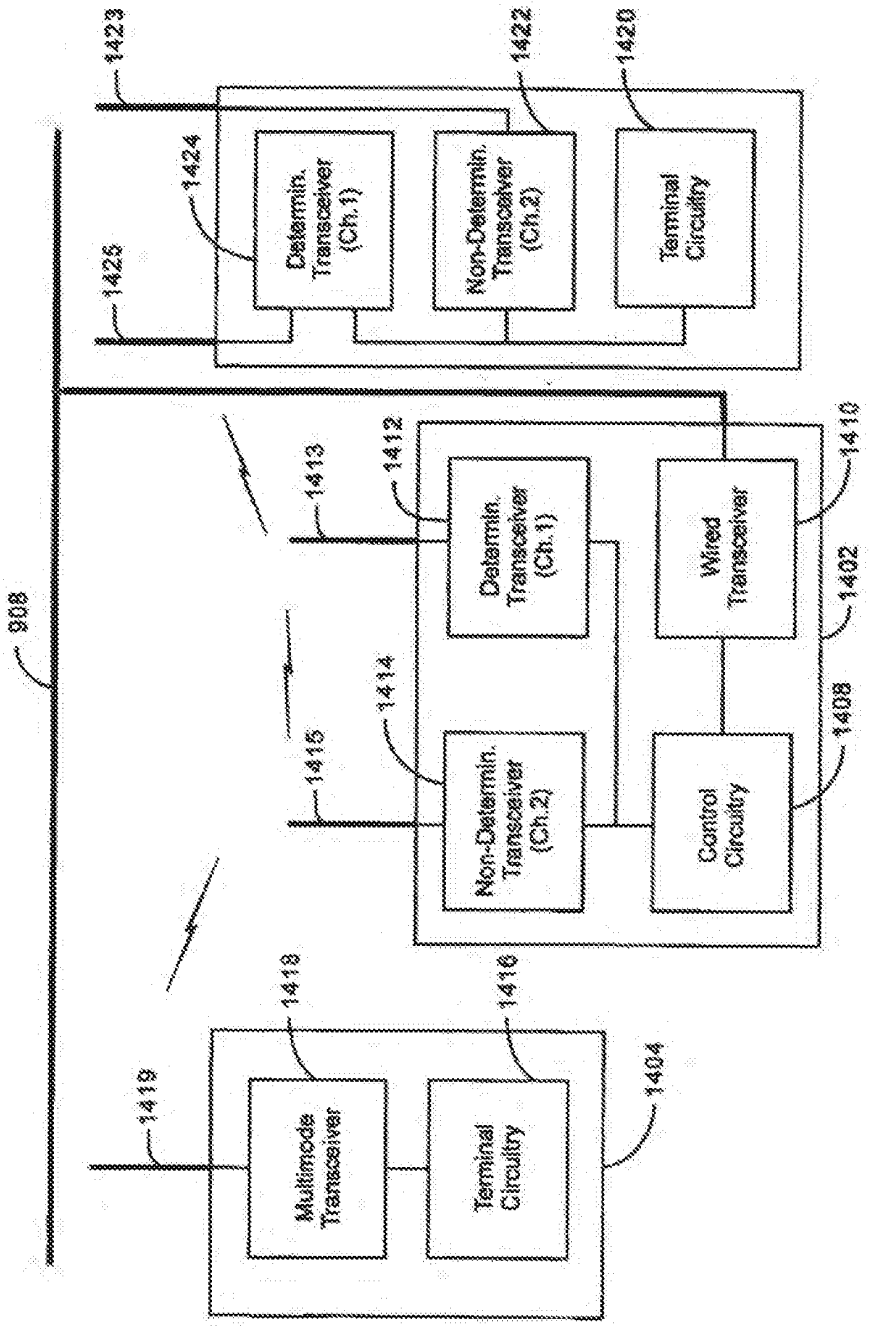
908
1423
1425
1424
Determin. Transceiver (Ch.1)
1422
Non-Determin. Transceiver (Ch.2)
1420
Terminal Circuitry
1413
1415
1412
Determin. Transceiver (Ch.1)
1414
Non-Determin. Transceiver (Ch.2)
Wired Transceiver
1410
1402
Control Circuitry
1408
1419
Multimode Transceiver
1418
Terminal Circuitry
1416
1404

Fig. 14a

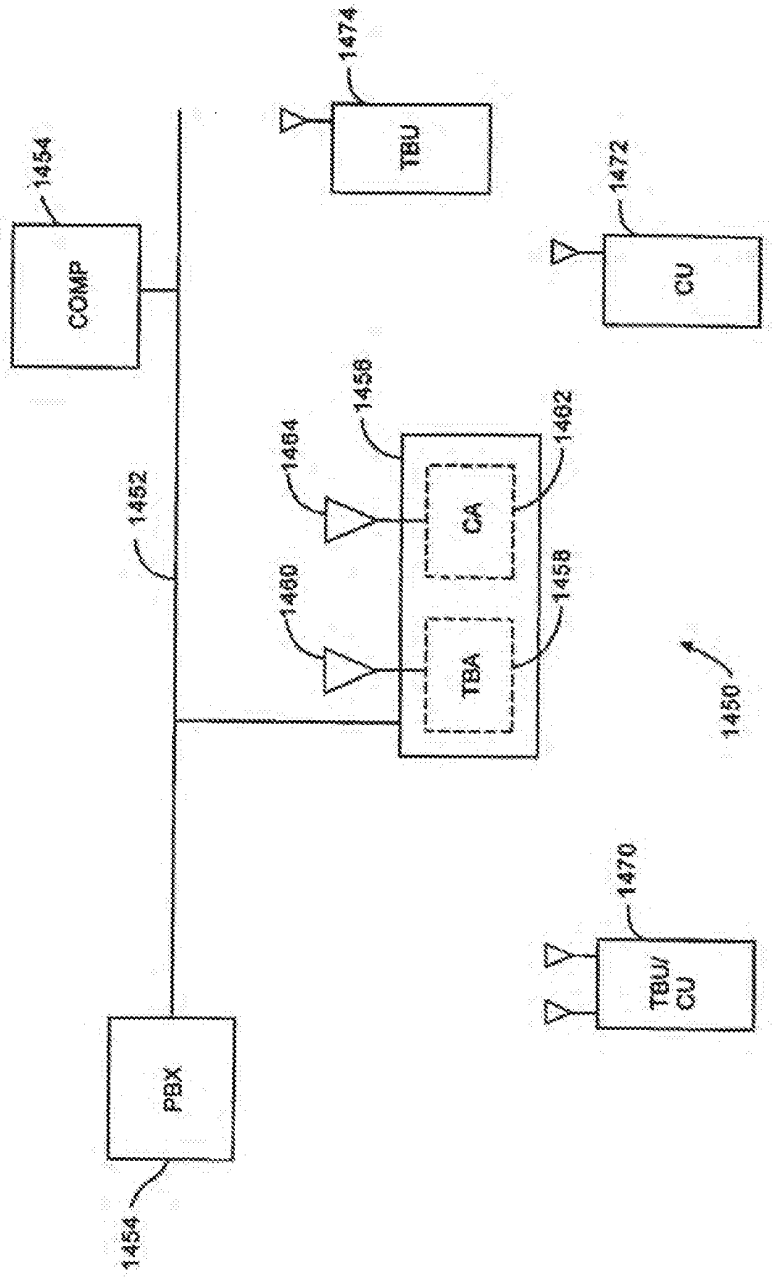
1474
TBU
1454
COMP
1472
CU
1456
1464
1462
CA
1452
1460
1458
TBA
1450
1470
TBU/
CU
PBX
1454

Fig. 14b

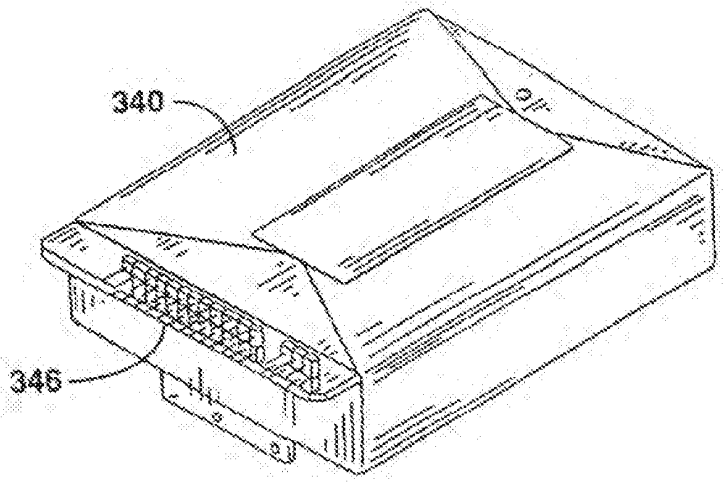

FIG. 4B

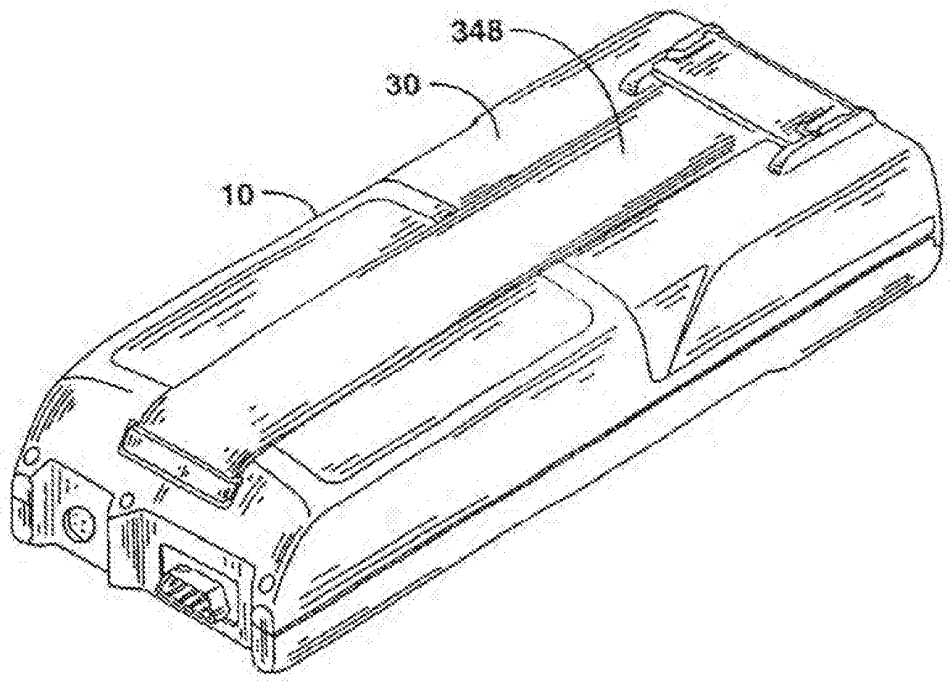

FIG. 4C

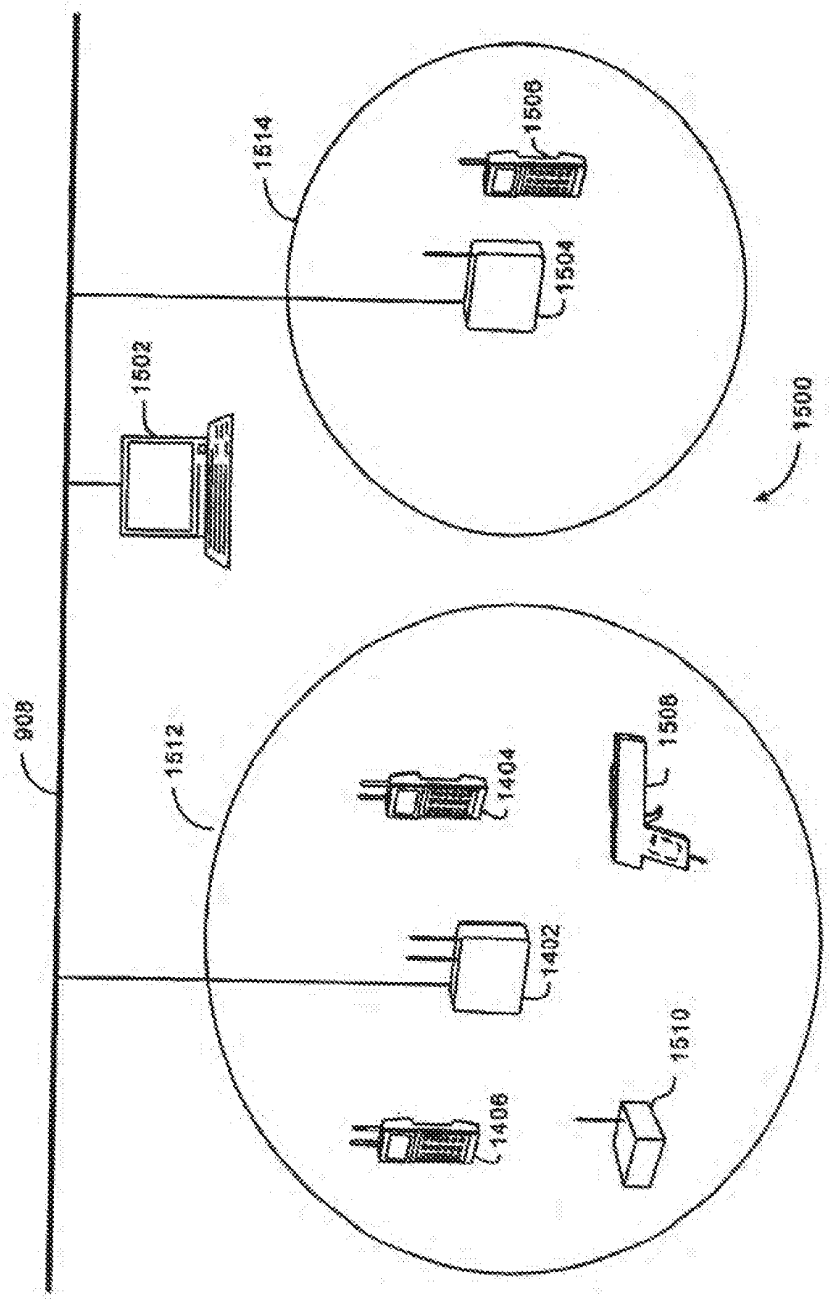

Fig.15

LOCAL AREA NETWORK HAVING MULTIPLE CHANNEL WIRELESS ACCESS

CROSS-REFERENCE TO RELATED APPLICATIONS

The present application is a continuation of U.S. application Ser. No. 08/878,357 filed Jun. 27, 1997 now U.S. Pat. No. 5,960,344, which is a continuation-in-part of U.S. application Ser. No. 08/772,895 filed Dec. 24, 1996, abandoned, which is a continuation-in-part of U.S. application Ser. No. 08/696,086 filed Aug. 13, 1996, abandoned, which is a continuation of U.S. application Ser. No. 08/238,180 filed May 4, 1994, now issued as U.S. Pat. No. 5,546,397, which is a continuation-in-part of U.S. application Ser. No. 08/197,392 filed Feb. 16, 1994, abandoned, which is a continuation-in-part of U.S. application Ser. No. 08/170,121 filed Dec. 20, 1993, abandoned.

The U.S. application Ser. No. 08/772,895 filed Dec. 24, 1996, also claims priority to PCT application Ser. No. PCT/US96/09474, filed on Jun. 3, 1996.

All of the aforementioned applications are hereby incorporated herein by reference in their entirety. In addition, U.S. Pat. No. 5,425,051 issued Jun. 13, 1995 to Ronald L. Mahany is also hereby incorporated herein by reference in its entirety.

BACKGROUND

1. Technical Field

The present invention relates generally to access points used in wireless local area networks, and more specifically to an access point which includes multiple wireless adapters.

2. Related Art

Wireless local area networks (WLAN's) use radio frequency transmissions to communicate between roaming computer devices and access points (or base stations). The access points are connected to an infrastructure that electronically connects all of the access points to a host system. The wired infrastructure and the access points make up an information distribution network used for the transfer of information and for communications.

In a wireless networking environment, various types of devices may need to communicate within a given area. When incompatibilities between device types arise, the wireless infrastructure must accommodate the various device types. Accommodating the different device types in a single infrastructure is generally difficult to accomplish. Further, devices within the wireless networking environment typically communicate differing types of data, each with its own priority and bandwidth requirements. Accommodating the various types of data with their related priorities often could not be accomplished by prior devices due to bandwidth limitations, conflicting priorities and incompatible standards within the wireless network.

In prior WLANs, a first wireless terminal that desired to communicate with a base station often could not detect transmissions from a second wireless terminal currently engaged in ongoing communication with the access point. As a result, the wireless terminal often initiated transmissions that collided with the ongoing communications. Operation of this type is referred to as a "hidden terminal" situation. To solve the hidden terminal situation, some prior base stations were configured with a second transmitter for delivering a carrier signal on a "busy channel" whenever the base station was engaged in communication on the "data channel." All terminals were also fitted with a second receiver, tuned to the busy channel, and required to check the busy channel before initiating communication on the data channel. However, the additional power required, bandwidth used, hardware needed and associated cost made the busy channel solution undesirable for most applications.

Some prior WLANs attempted to solve operational difficulties by simply increasing the transmission capacity available on the infrastructure. Such expansion temporarily decreased conflicts in operation of the WLANs. However, the infrastructure, which is expensive to install, typically became overloaded quickly resulting in the same or similar problems.

SUMMARY OF THE INVENTION

The present invention is directed to communication network that supports communication within a premises. The communication network comprises an access point, a plurality of wireless roaming devices, a first wireless communication channel, and a second wireless communication channel. The access point itself comprises a first processing circuit, a first radio transceiver coupled to the first processing circuit, and a second radio transceiver coupled to the first processing circuit. Each of the plurality of wireless roaming devices comprising a second processing circuit, a third radio transceiver and a radio receiver. Therein, the first wireless communication channel that supports communication flow via the communication network, while the second wireless communication channel is used to manage the flow of communication through the first wireless communication channel. In addition, the first and third radio transceivers are operable on the first wireless communication channel, while the second radio transceiver and the radio receiver are operable on the second wireless communication channel.

The communication network also supports various other aspects of the present invention. For example, the access point may further comprise a wired communication interface circuit coupled to the first processing circuit. Selective participation on the first and second communication channels may also provide further benefits. In one embodiment, each of the plurality of wireless roaming devices utilizes the radio receiver on the second wireless communication channel before participating with the third radio transceiver on the first wireless communication channel. In another, each utilizes the radio receiver on the second wireless communication channel to gain access with the third radio transceiver on the first wireless communication channel. Each may also or alternatively utilize the second wireless communication channel to identify ongoing communication on the first wireless communication channel to, perhaps, provide an indication as to when channel capacity may become available.

Other aspects may be found in an alternate communication network which also supports communication within a premises. This communication network comprises an access point, first and second wireless communication channels and plurality of wireless roaming devices. The first wireless communication channel has first communication flow characteristics, while the second wireless communication channel has second communication flow characteristics. The first and second radio transceivers participate on the first and second wireless communication channels, respectively. Therein, each of the plurality of wireless roaming devices comprises a second processing circuit and means for selectively participating on the first and second wireless communication channels.

The access point may also comprise a wired communication interface circuit coupled to the first processing circuit

that may itself comprise a first and a second microprocessor. Additionally, at least one of the plurality of wireless roaming devices may participate on the first wireless communication channel while the other of the plurality of wireless roaming devices participates on the second wireless communication channel. Although the at least one of the plurality of wireless roaming devices may participate on the first wireless communication channel as directed by the access device, other variations and combinations are also possible. For example, at least one of the plurality of wireless roaming devices may participate on the first wireless communication channel to exchange a specific type of data, and/or may participate based on current channel conditions. Such participation may be based the fact that, in some embodiments, the second wireless communication channel is more deterministic than the first wireless communication channel.

In any of the aforementioned embodiment, the communication network may comprise at least a second access point. Other variations and aspects of the present invention will become apparent to ones of ordinary skill in the art after reviewing the entire specification and drawings.

BRIEF DESCRIPTION OF THE DRAWINGS

FIG. **1** is a schematic representation of a high reliability access point in accordance with the present invention.

FIG. **2** is a schematic representation of another high reliability access point of the present invention utilizing an antenna diversity scheme at each wireless adapter.

FIG. **3** is a representation of a distribution network for a wireless LAN system utilizing high reliability access points.

FIG. **4** is a schematic representation of a high reliability access point with a backup power supply.

FIG. **5** is a schematic representation of a remote high reliability access point connecting to the distribution network.

FIG. **6** is block diagram illustrating an embodiment of an access point built in accordance with the present invention which includes two radios and a wired network interface, a first one of the radios operable on a first channel and a second one of the radios operable on a second channel.

FIG. **7***a* is a block diagram illustrating an embodiment of a portable data terminal according to the present invention, the portable data terminal having a single PCMCIA card that contains two radios, a first one of the radios operable on the first channel and a second one of the radios operable on the second channel.

FIG. **7***b* is a block diagram illustrating an alternative embodiment of the portable data terminal of FIG. **7***a*, wherein the single PCMCIA card includes a single radio operable on the first channel and the second channel and controlled by the processing circuitry.

FIG. **8** is a block diagram illustrating an alternative embodiment of a portable data terminal according to the present invention, the portable data terminal having a single PCMCIA card that contains a multi-channel wireless transceiver and a wired network interface.

FIG. **9** is a diagram illustrating a communication system built and operating according to the present invention, the communication system including at least one access point having multiple radios, portable terminals having multiple radios and portable terminals having multi-channel radios.

FIG. **10** is a diagram illustrating a communication system built and operating according to the present invention wherein one of the access points facilitates communication between portable terminal units operating on different channels within its cell by routing communication between two of its radios.

FIG. **11** is a block diagram illustrating an embodiment of a communication system according to the present invention wherein an access point uses a dedicated control/busy channel transmitter to manage transmissions between the access point and a plurality of roaming portable data terminals within its cell.

FIG. **12** is a drawing illustrating advantageous operation of the access device and portable data terminals of FIG. **11** when two roaming terminals encounter hidden terminal conditions.

FIG. **13** is a block diagram illustrating an alternate embodiment of the communication system of the present invention wherein an access point includes a dedicated control/busy channel transceiver and roaming data terminals communicate with the access point using either frequency nimble multi-channel transceivers or dedicated control/busy channel transceivers.

FIG. **14***a* is a block diagram illustrating a communication system of the present invention wherein access points and portable data terminals operate on a deterministic first channel and a non-deterministic second channel and the system routes communications on the channels based upon system conditions.

FIG. **14***b* is a diagram illustrating operation of a communication system of the present invention having both wired and wireless communication capability that includes at least one access point providing communication over a deterministic, time bounded first channel and a non-deterministic, contention access second channel.

FIG. **15** is a diagram illustrating the use of the access points and portable data terminals of FIG. **14***a* wherein the system routes various transmissions within the network system according to system conditions such as channel activity, data type and data priority.

DETAILED DESCRIPTION

Referring now to the drawings wherein like reference numerals designate identical or corresponding parts throughout the several views, FIG. **1** shows a high reliability access point **10** built in accordance with the present invention. An access point is a base station on a wireless local area network with which roaming portable or mobile computer devices can connect and communicate. The access point is typically part of an overall distribution network which is connected to a host computer or entire computer local area network (LAN). The access points and the infrastructure make up the distribution network and allow for communications between the roaming computer devices and the host computer or entire computer local area network (LAN).

A high reliability access point **10** of the present invention includes a central processing unit CPU processor **13** and at least two wireless adapters **15** and **16**. Each of the wireless adapters **15** and **16** include a radio **17** and **18**, a media access control (MAC) processor **19** and **20** and an antenna **21** and **22**, respectively. The radios and antennas are used for RF transmission and reception. The MAC processor controls low level protocol functions including controlling the operation of the radio, radio channel, error control, e.g., ARQ or Selective Response, and communication with the CPU processor **13**. The CPU processor **13** controls the high-level communications protocol functions and controls the interface **25** between the high reliability access point **10** and the infrastructure **26**. In a preferred embodiment there is a PCMCIA standard interface between the wireless adapters and the access point.

The distribution network is comprised of all of the access points and the infrastructure which connects all of the access

points. A host computer or an entire host network is connected to the distribution network. The distribution network allows computer devices to communicate with the host computer or host network.

The division between what is high level protocol, and thus handled by the CPU processor, and what is low level protocol, and thus handled by the MAC processor, can vary greatly depending upon the intelligence level of the MAC processor. In a preferred embodiment, the infrastructure conforms to an industry standard wired LAN such as Ethernet. The MAC processor can be made very intelligent and therefore capable of handling a great deal of radio specific protocol. On the other hand, the MAC processor can be minimally intelligent and handle only the most basic protocol functions allowing the CPU processor to handle the majority of the protocol functions.

Utilizing multiple wireless adapters in a single access point, as well as incorporating independent intelligence and low level protocol responsibility into each wireless adapter, yields several significant advantages. The examples depicted in FIGS. 1–4 show access points using only two wireless adapters per access point. Utilizing two wireless adapters in the manner discussed below will greatly increase the reliability of a particular access point, as well as increase the reliability of the entire distribution network. Access points could use more than two wireless adapters and the utilization of the multiple wireless adapters would be similar to the implementation describes using only two wireless adapters with addition protocol being required to handle the increased redundancy and to allow for more sophisticated self monitoring.

Referring still to FIG. 1, the CPU processor 13 can designate the RF address to which each wireless adapter 15 and 16 is to respond. The CPU processor 13 can, but need not, assign the same address to each wireless adapter. Therefore, in one configuration, the CPU processor 13 can designate that each of the wireless adapters 15 and 16 respond to the address assigned to that access point 10. Designated as such, both radios 17 and 18 will be operating simultaneously on the same channel. In a frequency hopping system, both radios 17 and 18 would be operating on the same hopping sequence, and be mutually synchronized to that hopping sequence.

Accordingly, the wireless adapters 15 and 16 are configured to receive incoming transmission from roaming computer devices within range. As both wireless adapters 15 and 16 receive the transmission, each adapter can evaluate the quality information to the CPU processor 13. The CPU processor 13 uses the quality information to determine which wireless adapter is receiving the higher quality signal. The CPU processor 13 will then typically choose to receive the incoming transmission on the wireless adapter with the higher signal quality and respond using the same adapter.

The antennas 21 and 22 can be positioned to allow the access point 10 to implement an antenna diversity scheme which will help reduce the negative effects caused by multipath interference. Antenna diversity can be accomplished in various ways. For example, the antennas can be placed sufficiently far apart, typically greater than a quarter wavelength apart, or the antennas can be positioned at a 90 degree angle with respect to each other to create a polarization antenna diversity scheme.

With an antenna diversity scheme in place, the signal from a wireless computer device will be received differently on each antenna due to multipath signal propagation. Therefore, each wireless adapter may receive a signal of a different quality. The CPU processor 13 can choose which wireless adapter to use based upon the quality of the received signal. Each wireless adapter includes the capability of measuring signal quality and only good messages will be forwarded on to the CPU processor 13. The quality can be appended to the message or can be presented to the CPU in a memory register.

Referring now to FIG. 2, another high reliability access point 20 built in accordance with the present invention is shown. In this embodiment, in addition to having an antenna diversity scheme at the access point level, there is an antenna diversity scheme at the wireless adapter level. Each wireless adapter 15 and 16 includes at least two antennas 21 and 23, 22 and 24, respectively positioned to create an antenna diversity scheme. Thus for the wireless adapter 15 the antennas 21 and 23 are either positioned sufficiently far apart, more than a quarter wavelength, or the antennas 21 and 23 are positioned in an asymmetrical or orthogonal manner to provide polarization diversity. The antennas 22 and 24 for the wireless adapter 26 are placed in a similar manner.

In this embodiment, an incoming signal is received on both antennas 21 and 23 of the wireless adapter 15. The MAC processor 19 then determines the quality if the signal coming in on each of the antennas 21 and 23 connected to the wireless adapter 15. Based upon the signal quality information, the MAC processor 19 will choose which of the antennas 21 and 23 to use to receive the incoming transmission. The MAC processor will also forward the signal quality information regarding the selected antenna to the CPU processor 13. The wireless adapter 16 will perform a similar process and forward the signal quality information for its best antenna to the CPU processor 13. The CPU processor 13 can then determine which wireless adapter is receiving the highest quality signal and use that wireless adapter to receive the incoming transmission and respond to the transmitting station.

When a high reliability access point wishes to transmit a message, such as an acknowledgment of a received message, to a roaming computer device, the CPU processor 13 will utilize the received quality signal information to determine which wireless adapter to use to send the message. Likewise, if the wireless adapter is utilizing an antenna diversity scheme it will also select the most appropriate antenna for transmitting a message.

While one of the wireless adapters is transmitting, the other wireless adapter can operate as a promiscuous listener to determine if the correct message is being sent. For example, referring to FIG. 1, if the CPU processor 13 is sending a message to a roaming computer device via wireless adapter 16, wireless adapter 17 can operate in the receive mode and monitor the message being sent by the wireless adapter 16. This provides a local loop back capability and allows the access point to perform self-monitoring. If the CPU processor 13 determines that one of the wireless adapters is not operating correctly, the malfunctioning wireless adapter can be disabled. Additionally, the CPU processor 13 can then send a message to the system management portion of the host network via the infrastructure 26 that it has a defective wireless adapter and repairs are needed.

Referring again to the configuration in which each of the wireless adapters is listening on the same channel, another advantage achieved by this configuration is the ability to receive two concurrent messages. In an access point that only contains one adapter, this situation will cause a colli-

sion and neither message will be received. In a high reliability access point built in accordance with the present invention, it is possible that the one wireless adapter will be able to receive one of the messages while the other wireless adapter receives the other, due to multipath fading at each of the wireless adapter antennas.

Referring now to FIG. 3, a portion of a distribution network **30** utilizing high reliability access points is shown. The distribution network **30** includes an infrastructure **33** and two high reliability access points **35** and **36**. Access point **35** includes a CPU processor **37** and two wireless adapters **38** and **39**. Access point **36** includes a CPU processor **41** and two wireless adapters **42** and **43**. In the present example, a break **45** in the infrastructure **33** has occurred. Access point **35** is upstream to the break with respect to the host computer network and thus is not immediately affected by the break **45**. However, access point **36** is downstream to the break **45** and therefore is no longer connected to the host computer network.

When a situation like this occurs, the downstream access point **36** will begin attempting to communicate with an upstream access point using wireless communication. In this example, the upstream access point is access point **35**. However, the communication need not be with the access point immediately upstream, the only requirement is that it be with an access point which is upstream with respect to the break. The host computer network or other access points will previously have shared the logistic and address information concerning all of the access points to each access point in the distribution network.

Once communications with an upstream access point **35** is established, each access point **35** and **36** will dedicate one of its wireless adapters **39** and **42**, respectively to provide a wireless repair of the break **45** in the infrastructure **33**. When this happens, the CPU processor for each of the access points will instruct the dedicated wireless adapter to change so that it is no longer operating on the same channel as the other adapter in the access point. A communication channel between access points is established. The dedicated wireless adapters **39** and **42** will no longer be used to transmit or receive information to or from roaming computer devices. However, the non-dedicated wireless adapters **38** and **43** will communicate with the roaming computer devices. Once the top priority of re-establishing communications between all of the access points in the distribution network **30** and the host computer network has been accomplished, the access points can then send a message to the system management portion of the host computer network detailing where the break (or breaks) exists.

It is conceivable that the distribution network could lose its entire infrastructure. In this case, each of the high reliability access points would dedicate one of its wireless adapters to network infrastructure communications while retaining one of its wireless adapters for communication with roaming computer devices. Using the same technique described above, a temporary or remote access point could be established that, intentionally, is not connected to the infrastructure. This configuration is discussed below in greater detail with reference to FIG. 5. The use of directional gain antennas for the dedicated wireless adapter would allow the temporary or remote access point to be positioned a considerable distance from the infrastructure.

Referring now to FIG. 4, a high reliability access point **50** with a backup power supply **52** is shown. Typically, the access point will be wired to an external power source **54** such as a wall outlet. However, there is a great desire that if power is lost that the distribution network not shut down since the roaming computer devices will normally not be dependent upon the external power source **54**. In this embodiment of the present invention, the back-up power source **52** is wired in parallel with respect to the external power source **54**. Thus, if the external power source **54** fails, the access point **50** will not lose power.

Referring now to FIG. 5, a remote access point **70** is shown connecting to the infrastructure **33** by means of dedicated wireless adapters **62** and **72**. The access point **70** is not hard wired to the infrastructure **33**. Therefore, the access point dedicates one of its wireless adapters **72** to network infrastructure communication. The other wireless adapter **74** continues to communicate with roaming computer devices within the range of the access point **70**. An access point **60** that is hard wired into the infrastructure **33** dedicates one of its wireless adapters **62** to network infrastructure communication and establishes a link between the infrastructure **33** and the remote access point **70**. The access point **60** can continue to service the roaming computer devices within its range through the wireless adapter **64**.

The hard wired access point **60** that is used to connect the remote access point **70** to the infrastructure need not be the access point that is physically closest to the remote access point **70**. Use of the directional antenna would allow a remote access point to establish communication with virtually any of the access points that are hard wired to the infrastructure. Additionally, several remote access points could establish wireless infrastructure communication by each dedicating one of their wireless adapters. In this arrangement, only one of the remote access points need be in communication with a wired access point. All other remote access points could establish communication with the host computer network via the remote access point in communication with a wired access point.

FIG. 6 is block diagram illustrating an embodiment of an access point **600** built in accordance with the present invention capable of communicating with wireless devices in its cell on both a first channel and a second channel. The access point **600** thus includes a first radio **616** operating on a first channel and a second radio **608** operating on a second channel. The access point also includes a processing unit **612** and additional circuitry **614**, both of which couple to the first radio **616**, the second radio **608** and a wired Ethernet transceiver through a bus interface **610**. The wired transceiver **606** allows the access point **600** to access a wired LAN backbone **622** to which various other system components may connect. The wired LAN backbone may include, for example, an ethernet network, a token-ring network or an asynchronous transfer mode (ATM) network among other network types. In any such case, the wired transceiver **606** facilitates communication between the access point **600** and devices coupled to the wired LAN backbone **622**.

The blocks illustrated in FIG. 6 are simplified for exemplary purposes, and it will be understood by one skilled in the art that an access point **600** according to the present invention is not limited to the block circuitry shown in FIG. 6. In another embodiment, the access point **600** may contain additional transceivers for communicating on other channels, over other mediums and in other networks as well.

The first channel radio **616** couples to first antenna **618** while the second channel radio **608** couples to second antenna **620**. The antennas **618** and **620** may either be protruding or non-protruding antennas, depending upon system requirements. The first channel radio **616** and the second channel radio **608** operate independently to form a

first communication cell and a second communication cell, respectively. When a radius of the first communication cell substantially equals a radius of the second communication cell, the cells substantially overlay one another. However, when the radii of the communication cells differ, the larger cell fully overlays and extends beyond the smaller cell. The first and second channels may operate using different frequencies, modulation schemes and code spreading schemes. The selections of such operational channel variations depend on overall system constraints, yet should result in two independent channels that do not interfere with one another unacceptably.

The bus interface **610** isolates the processing unit **612** and the additional circuitry **614** of the access point **600** from the operating characteristics of the radios **616** and **608** and the wired transceiver **606**. Thus, communication with any of the transceivers can be accommodated by general circuitry and software routines of the access point **600**. In one embodiment, the bus interface **610** is a PCI bus interface with the first channel radio **616**, second channel radio **608** and wired transceiver compatible with PCI bus standards. However, in other embodiments, differing interface standards may be employed.

In operation, the processing unit **612** is programmed with the network configuration to route communications through the first channel radio **616**, the second channel radio **608** and the wired transceiver **606**. However, roaming portable units may alter the network configuration as they move between cells. Thus, the access point **600** periodically polls devices within its communication cell to update the network configuration. Updates are entered and forwarded for other units in the system.

Incoming messages received via the wired transceiver **606** may be stored, displayed and routed via the first channel radio **616** or routed via the second channel radio **608** to portable data terminals or other wireless devices operating within the cell(s) of one or more of the access point **600**. Similarly, an incoming message on one of the radios **616** or **608** may be stored, displayed, routed through one of the radios **616** or **608** or routed through the wired transceiver **606**, depending upon the message destination and type.

By providing routing within the access point **600** between the first channel radio **616** and the second channel radio **608**, message delivery is expedited. Further, as will be described herein, by providing two radios in various access points, fewer cells may be required to adequately service a premises such as a factory. Moreover, when one of the radios is employed to provide control within a cell while the other radio provides primary communication within the cell, collisions between devices may be eliminated. Still further, when one of the radios provides a deterministic communication path while another one of the radios provides a non-deterministic communication path, data and message transmissions within the network may be controlled to satisfy bandwidth requirements of the various devices within the system. It may be preferable to utilize a deterministic communication path for some types of communications such as telephony video or real-time data transfer, for example. However, when the preferred deterministic path is unavailable for some reason, the alternative non-deterministic path may still be used.

The access point **600** may synchronize transmissions on the first channel radio **616** and the second channel radio **608** to avoid unacceptable conflicts between transmissions on one radio and receipts on the other radio. In this fashion, unacceptable conflicts are minimized.

FIG. 7*a* is a block diagram illustrating an embodiment of a portable data terminal **720** according to the present invention, the portable data terminal having a single PCMCIA card that contains two radios. In particular, the portable data terminal **720** contains terminal circuitry **722** that includes processing circuitry **726**, conventional terminal circuitry **728** and interface circuitry **730**. The interface circuitry **730** provides a PCMCIA interface for receiving PCMCIA cards of various functionality. Terminal circuitry **722** is well known and can be found in conventional portable or hand held computing devices.

Via the interface circuitry **730**, the portable data terminal **720** accepts PCMCIA cards. As illustrated, the PCMCIA card inserted constitutes a communication module **724** that provides wireless access on two channels. Specifically, the communication module **724** comprises processing circuitry **732**, first channel radio **735**, second channel radio **734** and interface circuitry **744**. The first channel radio **735** communicates via first antenna **737** while the second channel radio **734** communicates via second antenna **738**. Configured and operable in this manner, the portable data terminal **720** may communicate with the access point **600** of FIG. **6** on either the first channel or the second channel.

Independent of whether the first channel radio **735** or the second channel radio **734** is used, the processing circuitry **726** delivers and receives data and messages via the interface circuitry **730** in the same manner and format, i.e., the interface circuitry **730** supports a common communication interface and protocol. The processing circuitry **732** of the communication module **724** receives data and messages via the interface circuitry **744**. The processing circuitry **732**, including a DSP **742**, participates to assist in wireless communication via both the first channel radio **735** and the second channel radio **734**. Thus, the module **724** not only saves on PCMCIA slots, but also saves costs and increases reliability by sharing common circuitry resources. In particular, the first channel radio **735** and second channel radio **734** share the interface circuitry **744** and processing circuitry **732** which includes the DSP **742**. In another embodiment of the portable data terminal **720**, a PCMCIA compatible wired network adapter could be installed which would also share some of the common circuitry resources.

FIG. 7*b* is a block diagram illustrating an alternative embodiment of a portable data terminal **748** that receives a single PCMCIA card having a radio **750** that includes two separate radio units. As contrasted to the dual radio design of the portable data terminal **720** of FIG. 7*a*, the radio **750** of the portable data terminal **748** of FIG. 7*b* operates on both the first channel and the second channel. The radio **750** is coupled to antenna **756** and controlled by processing circuitry **752** that includes digital signal processing circuitry **754**. The radio **750** includes a first radio unit operable on the first channel and a second radio unit operable on the second channel with the radio units sharing some common components.

The processing circuitry **752** may control operation of the radio **750** in a simplex fashion such that the radio **750** operates on the first channel as required and operates on the second channel as required. Because the radio **750** may includes circuitry shared by the radio units, the radio **750** may only operate on one channel at a given time. By multiplexing its operation over time, however, the radio **750** provides sufficient coverage on the channels at a reduced cost. Other components of the portable data terminal of FIG. 7*b* were previously described with reference to FIG. 7*a* and will not be further described herein.

FIG. **8** is a block diagram illustrating an alternative embodiment of a portable data terminal **800** according to the

present invention, the portable data terminal **800** having a single PCMCIA card that contains a multi-channel (or multi-mode) wireless transceiver **739** and a wired network interface **736** (or modem transceiver). The portable terminal **800** includes terminal circuitry **722** and a module **802** including various components previously described with reference to FIG. 7*a*. The terminal circuitry **722** includes processing circuitry **726**, conventional terminal circuitry **728** and interface circuitry **730**. The communication module **802** includes processing circuitry **732**, the multi-mode wireless transceiver **739**, the wired modem transceiver **736** and interface circuitry **744**. When in use, the wired modem transceiver **736** interfaces via a jack **740** to a telephone line (not shown). Similarly, the wireless multi-mode transceiver **739** communicates via an antenna **741**.

The processing circuitry **732** of the communication module **802** receives data and messages via the interface circuitry **744**. If the modem transceiver **736** is being used, the processing circuitry **732** appropriately (de)segments and (de)compresses the data/messages utilizing a digital signal processor (DSP) **742**. Otherwise, the processing circuitry **732**, including the DSP **742**, participate to assist in wireless communication via the multi-mode transceiver **739**. Thus, the module **802** not only saves on PCMCIA slots (as required when a conventional radio card and a conventional modem card are both being used), but also saves costs and increases reliability by sharing common circuitry resources.

The multi-mode transceiver **739** is frequency nimble and may operate in various modes, such as those that may be used with a frequency spreading scheme such as those described in U.S. Pat. No. 5,425,051 issued Jun. 13, 1995 to Ronald L. Mahany, which is incorporated herein by reference. Thus, the multi-mode transceiver **739** may operate on both the first channel and the second channel and communicate with the access point **600** of FIG. **6** on either the first channel or the second channel. As will be further described herein, operation on differing channels may be employed to reduce installed system component requirements, to alleviate various potential interfering operating conditions and to more efficiently route data and messages within the wireless local area network.

FIG. **9** is a diagram illustrating a communication system **900** built and operating according to the present invention. The communication system includes an access point **902** operating on two channels and access points **904** and **906** operating on a single channel. Each of the access points **902**, **904** and **906** connects to a wired LAN backbone **908** to facilitate wired communication between the access points and computer systems **910** and **912** connected to the wired LAN backbone **908**.

Access point **902** includes both a first channel radio and a second channel radio. In the embodiment illustrated, the first channel radio creates a first channel cell **930** extending with a first channel radius about the access point **902**. The second channel radio of the access point **900** creates a second channel cell **932** extending with a second channel radius about the access point **902**. As illustrated, the second channel cell **932** has a larger radius than the radius of the first channel cell **930**. To create the relatively larger cell , the second radio may operate at a higher power, operate at a lower data rate or operate in another differing manner to create the relatively larger cell.

Access points **904** and **906** generate first channel cells **934** and **936**, respectively. Portable data terminals **920**, **922**, **924** and **926** and scanning unit **918** communicate with the various access points **902**, **904** and **906** and roam about the communication system **900**, potentially moving from cell to cell. Other devices, such as stationary printers **914** and **916** typically remain within one cell of the communication system **900**. In the embodiment illustrated, portable data terminals **920** and **926** include multi-mode radios while portable data terminals **922** and **924** include both a first channel radio and a second channel radio. However, in other embodiments, some of the portable data terminals may only on one of the channels.

As illustrated, terminal **922** includes a first channel antenna **940** and a second channel antenna **942** while access point **902** includes both a first channel antenna **944** and a second channel antenna **946**. Thus, whenever the terminal **922** roams within the second channel cell **932**, the terminal **922** communicates via a second channel radio and second channel antenna **942**. Further, terminal **950** may communicate with access point **902** on the first channel via its first channel antenna **954** when resident within the first channel cell **903**. Finally, terminal **952**, having a single radio operable the first channel via antenna **956** may communicate with access point **902** on the first channel when resident within the first channel cell **932**.

As shown, portable data terminal **922** resides both within the first channel cell **930** and the channel cell **932** generated by access point **902**. Thus, the portable data terminal **922** may communicate with access point **902** on either the first channel or the second channel. However, printer **916** and scanning unit **918** reside only within the second channel cell **932** generated by access point **902** and must communicate with the access point **902** on the second channel.

Print data originating at computer **910** and intended for printer **916** travels from computer **910**, through the wired LAN backbone **908** to access point **902** and across first channel cell **932** to the printer **916**. During this transmission, the data is routed through the wired LAN backbone and the wireless network based upon the network locations of the computer **910** and the printer **916**. The combination of these segments forms a unique network path. However, a message moving from portable data terminal **926** to portable data terminal **922** may be routed along two different network paths. While both network paths include access point **906**, wired LAN backbone **908** and access point **902**, one network path includes first channel cell **930** while the other network path includes second channel cell **932**. Thus, depending upon system conditions and the system configuration, the message is routed via one of the two network paths. Such conditions may include cell traffic, required data rates and other factors.

FIG. **10** is a diagram illustrating a communication system **1000** built and operating according to the present invention wherein one of the access points routes communication between two portable terminal units operating on different channels within its cell. In the communication system **1000**, both a first access point **1002** and a second access point **1004** include both first and second channel radios. The first access point **1002** generates a first channel cell **1006** and a second channel cell **1008** within which portable data terminals **1012** and **1014** operate. Further, second access point **1004** generates a first channel cell **1010** and a second channel cell **1011** within which portable data terminals **1012** and **1014** may operate. In the embodiment, the system **1000** prefers to route communication on the first channel due to its characteristics although the portable data terminals may operate on either channel.

As illustrated, portable data terminal **1012** resides within both the first channel cell **1006** and the second channel cell

1008 generated by access point 1002. However, portable data terminal 1014 resides only within the second channel cell 1008 of the access point 1002. Thus, in the transmission of a message from portable data terminal 1012 to portable data terminal 1014, access point 1002 receives the message from portable data terminal on the first channel radio and transmits the message to portable data terminal 1014 on the second channel. With reference to FIG. 6, the processing unit 612 receives the message via the first channel radio 616 across the bus interface 610. The processing unit 612 determines the destination of the message, and routes the message back across the bus interface 610 to the second channel radio 608 that transmits the message to portable data terminal 1014. Access point 1004 also provides multiple channel routing of messages between portable data terminals 1016 and 1018.

Without the multiple channel communication capabilities of the communication system 1000, an additional access point 1020 having a first channel cell 1022 would be required to facilitate communication with portable data terminals 1014 and 1018. The cost of such an additional access point 1020 would not only include the cost of the access point 1020 itself but the expense of connecting the access point 1020 to the wired LAN backbone 908 and AC power. The cost of such addition would far exceed the cost of the second channel radios in access points 1002 and 1004. Furthermore, in some installation, extensions of the wired LAN backbone 908 are not possible. Even if such access point 1020 were installed, the exemplary communication would require routing of messages between portable data terminal 1012 and 1014 across the wired LAN backbone 908. Such additional loading slows operation of the wired LAN backbone 908 and decreases system performance.

FIG. 11 is a block diagram illustrating an embodiment of a communication system 1100 according to the present invention wherein an access point 1102 uses a dedicated control/busy channel transmitter 1114 operating on a busy/control channel to manage transmissions between the access point 1100 and a plurality of roaming portable data terminals 1104 and 1106 within its cell. The communication system may also contain wired communication to a wired Ethernet backbone LAN 908.

The access device 1102 includes control circuitry 1120, a data transceiver 1118, a busy/control transmitter 1114 and antennas 1115 and 1117. The data transceiver 1117 supports communication on a communication channel (first channel) between the access point 1102 and wireless network devices operating within range of the access point, such as the portable data terminals 1104 and 1106. Further, the busy/control transmitter 1114 supports transmissions on the busy/control channel (second channel). The Ethernet transceiver 1115 supports communication between the backbone LAN 908 and the control circuitry 1120.

Portable data terminals 1104 and 1106 include terminal circuitry 1112, a data transceiver 1108 that communicates on the communication channel via antenna 1109 and a busy/control receiver 1110 that receives busy/control information via antenna 1111. As previously described, the communication channel and the busy/control channel are non-convergent and may operate concurrently in a single area or location. However, the access point 1102 must operate so as not to interfere with incoming transmissions by concurrently initiating a transmission. Thus, in one embodiment, transmissions on the communication channel and the control/busy channel are synchronized to prevent such conflicts.

The access point 1102 employs the busy/control transmitter 1114 to control operations within the first wireless network cell. In one embodiment, the access point 1102 periodically transmits control parameters that the portable data terminals 1104 and 1106 use to synchronize with communications on the communication channel. For example, with the data transceiver of the communication channel operating in a spread spectrum mode, the busy/control transmitter 1114 transmits code spreading sequences, frequency hopping parameters and other operating parameters that allow the portable data terminals 1104 and 1106 to communicate within the cell on the communication channel. Such control information may be intermittently transmitted by the access point 1102 or may be continuously transmitted.

Additionally, the access point 1102 transmits a busy signal on the busy/control transmitter 1114 to authorize communication within the cell. To prevent portable data terminal 1104, for example, from transmitting while portable data terminal 1106 is communicating with the access point 1102, the access point 1102 transmits a busy signal on the busy/control channel using the busy/control transmitter 1114. The portable data terminal 1104 receives the busy signal and does not transmit information while such busy signal is active, perhaps entering a sleep mode instead and waking up periodically to determine availability. The busy signal may include a continuous transmission or periodic transmission. However, in both embodiments, portable data terminals 1104 and 1106 listen with their respective control/busy receivers 1110 prior to initiating communication with the access point 1102. Thus, upon roaming into range of the wireless access device 1102, the portable data terminals 1104 do not interfere with ongoing communication.

FIG. 12 is a drawing illustrating advantageous operation of the access device and portable data terminals of FIG. 11 when two roaming terminals encounter hidden terminal conditions. In particular, each of the portable data terminals 1208 and 1212 is configured to listen on the busy/control channel and to communicate on the communication channel only when the communication channel is clear (available). In this configuration, when no desire to communicate is present, the portable data terminals 1208 and 1212 need only occasionally check the busy/control channel to identify any outstanding messages or communication requests as transmitted by the access device 1202. If either portable data terminal 1208 or 1212 desires to participate on the communication channel (to initiate communication or to respond to awaiting messages or communication requests), that terminal need only monitor the busy/control channel long enough to identify that the communication channel is clear before responding to a poll on the communication channel. As before, the wireless access device 1202 may also periodically identify the communication channel mode and associated parameters as selected and reselected by the wireless access device 1202.

To fully appreciate this process, first assume that the portable data terminals 1208 and 1212 are not within range of the wireless access device 1202. Upon wandering within range of the access device 1202, the portable data terminal 1212 begins listening for transmissions on a busy/control channel. Within some time period thereafter, the access device 1202 participates on the busy/control channel to transmit current channel conditions and optionally, the currently selected communication channel definition (i.e., mode and parameters) and/or pending message and communication request indicators. After identifying a need to participate, the portable data terminal 1212 awaits a transmission from access device 1202 (on the busy/control channel) that the selected communication channel is clear (not in use). When the channel is clear, the portable data terminal 1212 begins participating thereon.

Second, assume that, while the portable data terminal **1212** is engaged in ongoing communication with a computing device **1206** on a backbone LAN **908** via the access device **1202**, the portable data terminal **1208** comes within range of the access device **1202** and desires to participate on the communication channel. The portable data terminal **1208** adapts itself to participate on the busy/control channel and identifies, in periodic transmissions from the access device **1202**, that the communication channel is busy. Thus, the portable data terminal **1208** must monitor the busy/control channel to identify when the communication channel is clear before participating on the communication channel.

This operation works whether or not the portable data terminals **1208** and **1212** are within range of each other. In particular, portable data terminal **1208**, portable data terminal **1212** and access device **1202** have transmission ranges illustrated by dashed circles **1210**, **1214** and **1204**, respectively. Although both portable data terminals **1208** and **1212** are within range of the access device **1202**, neither are in range of each other and, thus, are referred to as "hidden" from each other. The access device **1202** is within range of both of the portable data terminals **1208** and **1212**. If the portable data terminal **1208** attempted to transmit on the communication channel while the portable data terminal **1212** was transmitting, a collision would occur at the wireless access device **1202**. However, this is not the case because both of the portable data terminals **1208** and **1212** must receive a communication channel clear indication on the busy/control channel from the access device **1202** that is in range of both, avoiding the hidden terminal problem. When participation is completed on the communication channel, the portable data terminals **1208** and **1212** resume monitoring of the busy/control channel.

Participation by the access device **1202** on the busy/control channel need only be by transmitting, although receiving might also be employed in case the busy/control channel is to be shared. Similarly, participation by the portable data terminals **1208** and **1212** need only be by receiving transmissions, although transmitting might also be employed. In particular, transmission might be employed by a wireless terminal on the busy/control channel if the wireless terminal does not support the currently selected communication channel, i.e., does not support the mode and associated parameters.

FIG. **13** is a block diagram illustrating an alternate embodiment of the communication system **1300** of the present invention wherein an access point **1302** includes a dedicated control/busy channel transceiver **1310** and roaming data terminals **1304** communicate with the access point **1302** using either frequency nimble multi-channel transceivers **1305** or a dedicated control/busy channel transceiver **1326**. Thus, the communication system **1300** facilitates bi-directional communication on the busy/control channel so that the access point **1302** may optimize operation of the system **1300**.

In addition to the busy/control transceiver **1310** coupled to antenna **1314**, the access point includes control circuitry **1306**, a data transceiver **1312** coupled to antenna **1316** that facilitates wireless communication on the communication channel and an Ethernet transceiver **1308** that couples the access point **1302** to the backbone LAN **908**. Portable data terminal **1304** includes terminal circuitry **1112** and a multi-mode/multi-channel transceiver **1305** that allows the portable data terminal **1304** to communicate both on the busy/control channel and the communication channel. Portable data terminal **1320** includes terminal circuitry **1322**, a busy/control transceiver **1324** coupled to antenna **1330** that allows the portable data terminal **1320** to communicate on the busy/control channel and a data transceiver **1326** coupled to antenna **1328** that allows the portable data terminal to communicate on the communication channel.

Having separate radio units and antennas, the access device **1302** participates on: 1) a selected communication channel, servicing data exchanges in the communication network cell; and 2) the busy/control channel defined by predetermined mode and parameter information known to all wireless transmitters, controlling access to the selected communication channel. Such participation is often simultaneous, preventing a portable data terminal **1304** or **1320** from having to wait long on the busy/control channel for a transmission. Within a predefined maximum time period, the portable data terminal **1304** or **1320** receives transmissions from the access device **1302** identifying currently selected communication channel mode and associated parameters, should such be required. The access device **1302** periodically broadcasts such information on the busy/control channel to capture terminals that happen to need communication channel definitions (e.g., selected mode and parameters) to participate. The portable data terminal **1304** utilizes the identified mode and associated parameter information to switch the multi-mode transceiver **1305** over to the selected communication channel and begins participation thereon. Portable data terminal **1320** may also alter the operation of the data transceiver **1326** based upon the receipt from the access point **1302**.

In operation, the wireless terminal **1304** participates on the busy/control channel except when it has a need to gain access to the selected communication channel. Thus, its operation in the system **1300** is satisfactory. By including only the terminal circuitry **1112** and one radio, the portable data terminal is less costly than the multi-radio portable data terminal **1320**. However, because the wireless terminal **1320** includes two radios, the portable data terminal **1320** may place the data transceiver **1326** in a low power state, and only power up the busy/control channel transceiver **1324** to check in. Thus, portable data terminal **1320** may consume less power that portable data terminal **1304**.

FIG. **14***a* is a block diagram illustrating a communication system **1400** according to the present invention wherein an access point **1402** and portable data terminals **1404** and **1406** operate on a deterministic first channel and a non-deterministic second channel and the system **1400** routes communications on the channels based upon system conditions and/or the requirements of a particular communication. To carry out such functionality, the access device **1402** may comprise control circuitry **1408**, a wired LAN transceiver **1410** and either a single, configurable transceiver (for operating on both the deterministic and non-deterministic channels, not shown) or a single transceiver **1412** coupled to antenna **1413** for operating on the deterministic channel and a single transceiver **1414** coupled to antenna **1415** for operating on the non-deterministic channel.

In one embodiment, the deterministic channel allocates a particular communication bandwidth to each wireless device requiring communication, perhaps in a polled, token passing or time slotted implementation. Such operation may be required where many wireless devices reside within a single cell and compete for communication with the access point **1402**. In the embodiment, the access point **1402** also allows all devices within the cell to compete for available bandwidth on the non-deterministic channel. However, the access point **1402** may provide overrides to dynamically reallocate bandwidth in the deterministic channel and to assign bandwidth on the non-deterministic channel as may be required for the particular operating conditions.

With a single multi-mode transceiver **1418** coupled to antenna **1419** controlled by terminal circuitry **1416**, the portable data terminal **1404** operates on either the deterministic channel or the non-deterministic channel at any time. Alternatively, portable data terminal **1406** having terminal circuitry **1420**, a deterministic transceiver coupled to antenna **1425** and a non-deterministic transceiver **1422** coupled to antenna **1423** communicate on both the deterministic channel and non-deterministic channel simultaneously.

Independent of their differing constructions, the portable data terminals **1404** and **1406** may determine which channel to operate upon. During data transfer operations wherein data transfer rates are not critical, portable data terminal **1404** may determine that the deterministic channel provides sufficient bandwidth. In that case, the portable data terminal **1404** configures its multi-mode transceiver **1418** to operate on the deterministic channel. However, during voice message transfer operations, the portable data terminal **1404** may determine that the bandwidth of the deterministic channel is not satisfactory. In that case, the terminal circuitry **1404** would configure the multi-mode transceiver **1418** to operate on the non-deterministic channel.

FIG. **14b** is a diagram illustrating a communication system **1450** according to the present invention that facilitates both wired and wireless communications. The communication system **1450** includes a wired backbone **1452** and at least one access point **1456** that supports communication over a deterministic, time bounded first wireless channel and a non-deterministic, contention access second wireless channel. Along with the access point **1456**, the communication system **1450** may also include a PBX (Private Broadcast Exchange) system **1454**, one or more of a computer **1454**, and other typical wired network devices interconnected by the wired backbone **1452**. Additionally, the communication system **1450** comprises a plurality of wireless network devices, such as wireless terminals **1470**, **1472** and **1474**, which may be portable hand-held devices, mobile computing devices, laptop computers, wireless peripherals, etc.

Communication upon the wired backbone **1452** may be accomplished according to various communication techniques. In one embodiment, communication upon the wired backbone **1452** occurs via an STM (Synchronous Transfer Mode) protocol wherein the wired backbone **1452** serves as an STM backbone. With the STM protocol, a particular bandwidth is provided for each communication link established between a sending and a receiving device attached to the wired backbone **1452**.

In another embodiment, communication upon the wired backbone **1452** is carried out using an ATM (Asynchronous Transfer Mode) protocol in which bandwidth between a sending and a receiving device on the wired backbone **1452** is adjusted based upon immediate communication requirements. In such operation, the wired backbone **1452** serves as an ATM backbone. Operation according to the ATM protocol allows for variations in data transmission bandwidths as is immediately required but that provides an average bandwidth over time.

The at least one access point **1456** provides a link between the wireless and wired communications within the communication system **1450**. The access point **1456** includes a time bounded adapter **1458** connected to an antenna **1460** which provides wireless communication on the deterministic, time bounded first wireless channel governed by a first wireless protocol. The access point **1456** also includes a contention adapter **1462** connected to an antenna **1464** which provides wireless communications on the non-deterministic, contention access second wireless channel governed by a second wireless protocol. Alternatively, part or all of the circuitry underlying the adapters **1458** and **1462** may be combined into a single unit to share common underlying functionality.

The wireless network device **1470** includes either a dual purpose transceiver or two transceivers for communicating on the first and second wireless channels via the first and second wireless protocols, respectively. A transceiver in the wireless network device **1472** only supports communication on the second wireless channel pursuant to the second wireless protocol. Likewise, a transceiver in the wireless network device **1474** supports communication on the first wireless channel pursuant to the first wireless protocol. For example, the wireless network device **1474** might comprise a portable phone unit operating using, e.g., PCS (Personal Communication Service) or other telephony protocol as the first wireless protocol.

Although direct communication is possible, to manage the first wireless channel, the at least one access point **1456** relays wireless communication between the wireless network devices **1470** and **1474** if both participate on the first wireless channel. If the at least one access point **1456** is the only access point involved that services the two devices **1470** and **1474**, such relaying need not involve the wired protocol on the backbone **1452**. If the device **1470** happens to communicate via the second wireless channel, the access point **1456** internally translates and relays communications between the devices **1470** and **1474**. Similarly, if the device **1470** intends to communicate with a wired network device using either the first or second wireless protocol, the access point **1456** utilizes the first or second wireless protocols, respectively, to communicate with the device **1470**. The access point **1456** also communicates with the target wired network device, e.g., the computer **1454**, via the wired communication protocol. Relaying between the wired and wireless channels also requires translation.

If more than one access point is coupled to the wired backbone **1452**, for example, to support many more wireless network devices, roaming wireless network devices and/or extended coverage regions, the access points only utilize wired backbone bandwidth if necessary. Each access point attempts to minimize external bandwidth (of wired and wireless channels) by preferring internally performed relaying and, when needed, translation (between the first and second wireless protocols, or between the wired protocol and either the first or the second wireless protocol).

The PBX system **1454** connects the wired backbone **1452** through a switched telephone network to other communication systems such as the system **1452**. This facilitates communications between all wireless and wired network devices, such as the computer **1454**, the device **1470** and remote network devices (devices) connected elsewhere to the switched telephone network. In circuit switched applications, a VLAN (virtual local area network) can be established between wired and wireless network devices coupled to the wired backbone **1452**. Such coupling also includes remote network devices coupled via the PBX system **1454**.

FIG. **15** is a diagram illustrating the access point **1402** and portable data terminals **1404** and **1406** of FIG. **14a** wherein a system **1500** routes various transmissions according to system conditions such as channel activity, data type and data priority. In the system **1500**, access point **1402** forms cell **1512** while access point **1504**, operating on only a single channel, forms cell **1514**. Thus, while access point **1402**

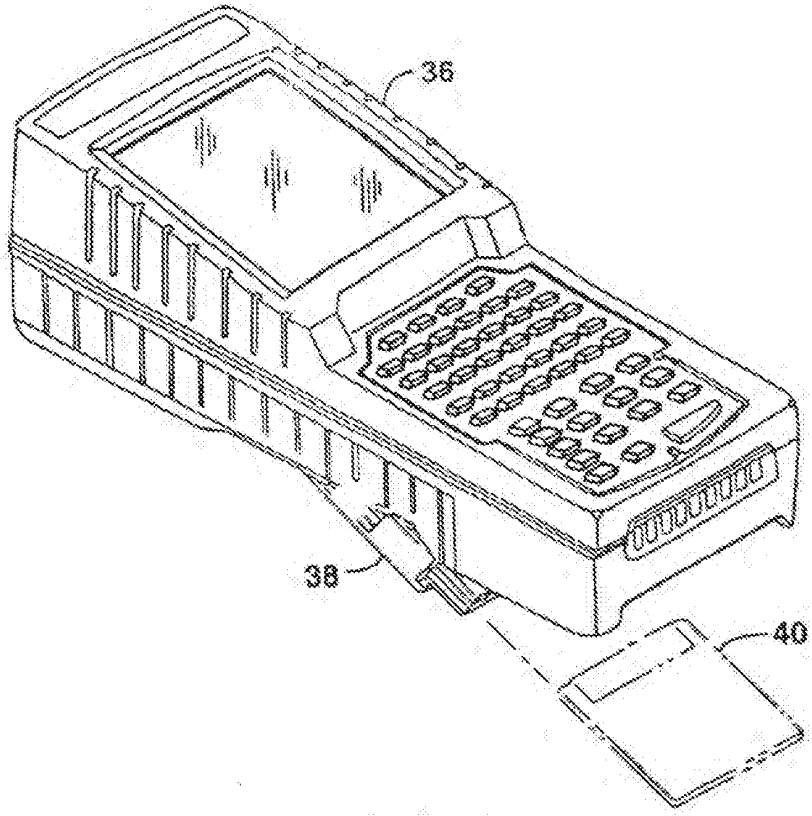

FIG. 5

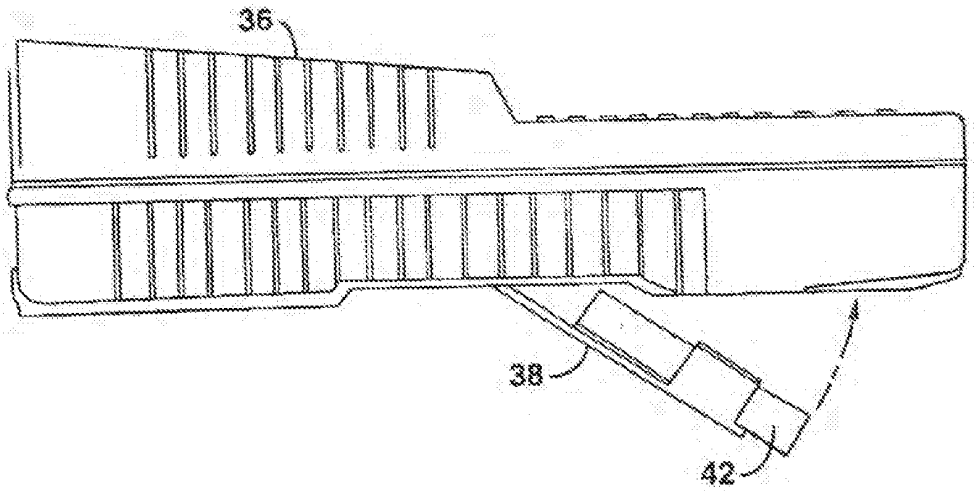

FIG. 6

must determine how to allocate wireless communications among the deterministic channel and non-deterministic channel in its cell **1512**, access point **1504** routes all communications on its only channel.

In a first example of the operation of the system **1500**, data from computer system **1502** is transmitted to portable data terminal **1406**. The computer system **1502** transmits the data through the wired LAN backbone **908** to the access point **1402**. The access point **1402**, having a deterministic transceiver **1412** and a non-deterministic transceiver **1414**, routes the data through one of the transceivers. Based upon the type of data, the quantity of data, the rate at which data may be passed on either channel, the amount of traffic on the channels and other conditions, the control circuitry **1408** in the access point **1402** routes the data on either the non-deterministic channel via the non-deterministic transceiver **1414** or on the deterministic channel via the deterministic transceiver **1412**. In the present example, the data to be transferred has a relatively low priority and the access point routes the data on the deterministic channel to the portable data terminal **1404**. Likewise, print jobs from the computer **1402** to the printer **1510** would also have relatively low priority and be transmitted via the non-deterministic channel.

Next, consider data transmissions from scanner **1508** to computer system **1502**. During operation, the scanner transmits an image to the computer system **1502** for decoding and the computer system **1502** returns decoded information at which point the scanner ceases scanning. Rapid transmission between the scanner **1508** and the computer system **1502** reduces the time within which the scanner **1508** performs scans. Thus, rapid transmissions may reduce energy consumption in the scanning process that drains battery life of the scanner **1508**. Thus, the scanner **1508** and access point **1402** both attempt to transmit data on the non-deterministic channel at a relatively higher data transfer rate. However, if the non-deterministic channel is unavailable, the transmission on the deterministic channel may be satisfactory.

In the case of a voice message transmission from portable data terminal **1506** in cell **1514** to portable data terminal **1404** in cell **1512**, transmission on the deterministic channel may be unsatisfactory. Thus, upon an incoming voice message transmission, the access point **1402** may reallocate the deterministic channel allocating additional bandwidth for the voice message. In an alternative operation, the access point **1402** may interrupt communication on the non-deterministic channel and transmit the voice message to the portable terminal unit **1404** on the non-deterministic channel. Thus, in the mode of operation of the system **1500** modifies its operation to provide sufficient bandwidth for the voice message.

In view of the above detailed description of the present invention and associated drawings, other modifications and variations will now become apparent to those skilled in the art. It should also be apparent that such other modifications and variations may be effected without departing from the spirit and scope of the present invention as set forth in the claims that follow.

What is claimed is:

1. An access point for communicatively coupling a first roaming wireless device and a second roaming wireless device to a wired link, the access point comprising:

a housing;

a control circuit disposed in the housing;

a wired transceiver, disposed in the housing, that is communicatively coupled to the control circuit and the wired link;

a first wireless transceiver, disposed in the housing, that is communicatively coupled to the control circuit, the first wireless transceiver operating on a first wireless communication channel to communicatively couple with the first roaming wireless device;

a second wireless transceiver, disposed in the housing, that is communicatively coupled to the control circuit, the second wireless transceiver operating on a second wireless communication channel to communicatively couple with the second roaming wireless device; and

the control circuit accommodates communications between the first wireless transceiver and the second wireless transceiver exclusive of the wired link.

2. The access point of claim **1**, further comprising a bus interface communicatively coupling the control circuit to the first and second wireless transceivers and the wired transceiver.

3. The access point of claim **2**, wherein the bus interface is substantially compliant with a bus standard.

4. The access point of claim **3**, wherein the bus standard is the PCI standard.

5. The access point of claim **1**, wherein the wired transceiver accommodates communication with an ethernet network.

6. The access point of claim **1**, wherein the wired transceiver accommodates communication with a token-ring network.

7. The access point of claim **1**, wherein the wired transceiver accommodates communication with an asynchronous transfer mode network.

8. The access point of claim **1**, wherein the wired transceiver accommodates communication with a packetized network.

9. The access point of claim **1**, wherein the first wireless transceiver supports a substantially non-deterministic media access protocol and the second wireless transceiver supports a substantially deterministic media access protocol.

10. The access point of claim **1**, wherein the first wireless transceiver and the second wireless transceiver support substantially distinct non-deterministic media access protocols.

11. The access point of claim **1**, wherein the first wireless transceiver and the second wireless transceiver operate independently to form a first communication cell and a second communication cell.

12. The access point of claim **1**, wherein the control circuit synchronizes transmissions on the first radio channel and the second radio channel to minimize conflicts between transmissions on one wireless transceiver and receipts on the other wireless transceiver.

13. The access point of claim **1**, wherein the wired link is a local area network.

14. The communication network of claim **10**, wherein the first wireless communication channel is a radio frequency (RF) channel.

15. An access point for establishing communications with a wired link, the access point comprising:

a first wireless transceiver operating to establish a first wireless cell;

a second wireless transceiver operating to establish a second wireless cell;

the first and second wireless transceivers operating such that the first and second cells are substantially overlapping;

a control circuit that communicatively couples the first and second wireless transceivers to one another;

a wired transceiver that communicatively couples the control circuit to the wired link; and

the control circuit communicatively couples the first wireless transceiver and the wired transceiver.

16. The access point of claim **15**, wherein the first and second wireless transceivers each comprise processing circuitry that supports a communication protocol.

17. The access point of claim **15**, wherein the control circuit allows communications between the first wireless transceiver and the second wireless transceiver exclusive of the wired link.

18. The access point of claim **15**, wherein the first wireless transceiver supports a substantially non-deterministic media access protocol and the second wireless transceiver supports a substantially deterministic media access protocol.

19. The access point of claim **15**, wherein the first wireless transceiver and the second wireless transceiver support substantially distinct non-deterministic media access protocols.

20. A communication network comprising:

a wired LAN;

a plurality of access points coupled via the wired LAN, each of the plurality of access points comprising:

a housing;

a control circuit disposed in the housing;

wired transceiver, disposed in the housing, that is communicatively coupled to the control circuit and the wired LAN;

a first wireless transceiver, disposed in the housing, that is communicatively coupled to the control circuit and operates on a first wireless communication channel;

a second wireless transceiver, disposed in the housing, that is communicatively coupled to the control circuit and operates on a second wireless communication channel; and

the control circuit accommodates communications between the first wireless transceiver and the second wireless transceiver exclusive of the wired LAN;

a first roaming wireless device comprising a third wireless transceiver that operates on the first wireless communication channel; and

a second roaming wireless device comprising a fourth wireless transceiver that operates on the second wireless communication channel.

21. An access point for establishing communications with a wired link, the access point comprising:

processing circuitry operating to send and receive data according to a first protocol; and

interface circuitry operable to:

receive data from the processing circuitry according to the first protocol;

send data to a plurality of wireless transceivers operating on independent wireless communication channels, according to at least a second protocol independent of the first protocol;

send data to a wired transceiver operating on the wired link, according to a third protocol independent of the first and second protocols;

receive data from the plurality of wireless transceivers according to at least the second protocol independent of the first protocol;

receive data from the wired transceiver according to the third protocol independent of the first and second protocols; and

send data to the processing circuitry according to the first protocol.

22. The communication network of claim **20**, wherein the first roaming device operates only on the first wireless communication channel.

23. The communication network of claim **20**, wherein the first roaming wireless device and the second roaming wireless device have different transmission characteristics.

24. The communication network of claim **20**, wherein the first roaming wireless device and the second roaming wireless device incorporate different data throughput capabilities.

25. The communication network of claim **20**, wherein the first roaming wireless device and the second roaming wireless device operate independently to form a first communication cell and a second communication cell, respectively.

26. The communication network of claim **20**, wherein the radius of the first communication cell substantially equals the radius of the second communication cell.

27. The communication network of claim **20**, wherein the wired transceiver accommodates communication with an Ethernet network.

28. The communication network of claim **20**, wherein the wired transceiver accommodates communication with a token-ring network.

29. The communication network of claim **20**, wherein the wired transceiver accommodates communication with an asynchronous transfer mode network.

30. The communication network of claim **20**, wherein the wired transceiver accommodates communication with a packetized network.

31. The communication network of claim **20**, wherein the first wireless transceiver supports a substantially non-deterministic media access protocol and the second wireless transceiver supports a substantially deterministic media access protocol.

32. The communication network of claim **20**, wherein the first wireless transceiver and the second wireless transceiver support substantially distinct non-deterministic media access protocols.

33. The communication network of claim **20**, wherein the third wireless transceiver is a PCMCIA card.

34. A communication system, comprising:

a wired LAN;

a plurality of access points coupled via the wired LAN, each of the plurality of access points comprising:

a housing;

a control circuit disposed in the housing;

a wired transceiver, disposed in the housing, that is configurable to communicatively couple the control circuit to the wired LAN;

a first wireless transceiver, disposed in the housing, that is communicatively coupled to the control circuit, the first wireless transceiver operating pursuant to a substantially deterministic, time bounded wireless communication protocol; and

a second wireless transceiver, disposed in the housing, that is communicatively coupled to the control circuit, the second wireless transceiver operating pursuant to a substantially non-deterministic contention access wireless communication protocol; and

a plurality of roaming wireless devices that each wirelessly communicate with at least one of the first and second wireless transceivers.

35. The access point of claim **21**, wherein the second and third protocols are the same and comply with PCI bus standards.

36. The access point of claim 21, wherein the processing circuitry is programmed with a network configuration to selectively route data through the interface circuitry to the plurality of wireless transceivers and the wired link.

37. The access point of claim 21, further comprising at least one acceptor for modularly receiving the plurality of wireless transceivers.

38. The access point of claim 37, wherein the plurality of transceivers are carried by at least one PCMCIA card.

39. The access point of claim 21, wherein the plurality of wireless transceivers operate independently to form a plurality of communication cells.

40. The access point of claim 39, wherein the plurality of communication cells are formed by the plurality of wireless transceivers operating at different data rates.

41. The access point of claim 39, wherein the plurality of communication cells are formed by the plurality of wireless transceivers operating at different power levels.

42. The access point of claim 21, wherein the independent wireless communication channels are differentiated by a characteristic selected from the group consisting of frequencies, modulation schemes and code spreading schemes.

43. An access point for establishing communications with a wired link, the access point comprising:

a housing;

a PCMCIA interface capable of modularly receiving into the housing a plurality of wireless transceivers operating on independent wireless communication channels;

a wired transceiver in the housing operating on the wired link;

interface circuitry in the housing operable to communicate with wireless transceivers modularly received via the PCMCIA interface and with the wired transceiver; and

processing circuitry in the housing coupled to the interface circuitry to control communications by the wireless transceivers modularly received via the PCMCIA interface and by the wired transceiver.

44. The access point of claim 43, wherein the interface circuitry comprises a PCI bus interface for communicating with the wireless transceivers modularly received via the PCMCIA interface and with the wired transceiver according to PCI bus standards.

45. The access point of claim 43, wherein the processing circuitry is programmed with a network configuration to selectively route data through the interface circuitry to the plurality of wireless transceivers and the wired link.

46. The access point of claim 43, wherein the plurality of wireless transceivers operate independently to form a plurality of communication cells.

47. The access point of claim 46, wherein the plurality of communication cells are formed by the plurality of wireless transceivers operating at different data rates.

48. The access point of claim 46, wherein the plurality of communication cells are formed by the plurality of wireless transceivers operating at different power levels.

49. A communication system, comprising:

a wired LAN;

a plurality of access point coupled via the wired LAN, each of the plurality of access points comprising:

a housing;

a control circuit disposed in the housing;

a wired transceiver, disposed in the housing, that is configurable to communicatively couple the control circuit to a wired local area network; and

a wireless transceiver system, disposed in the housing, that is communicatively coupled to the control circuit, the wireless transceiver system contemporaneously operating on first and second communication channels; and

a plurality of roaming wireless devices that each wirelessly communicate with the wireless transceiver system using at least one of the first and second communication channels.

50. An access point for establishing communications with a wired link, the access point comprising:

a housing;

an interface system for modularly receiving into the housing a plurality of wireless transceivers operating on independent wireless communication channels;

interface circuitry in the housing operable to communicate with wireless transceivers modularly received via the interface system; and

processing circuitry in the housing coupled to the interface circuitry to control communications effected by wireless transceivers modularly received via the interface system.

51. An access point for establishing communications with a wired link, the access point comprising:

a housing;

receiving means for modularly receiving into the housing a plurality of wireless transceivers operating on independent wireless communication channels;

interface means in the housing for communicating with wireless transceivers modularly received by the receiving means; and

processing means in the housing coupled to the interface means for controlling communications by wireless transceivers modularly received by the receiving means.

52. A method of establishing communications with a wired link through an access point, the method comprising:

modularly receiving at least one wireless transceiver in the access point, the at least one wireless transceiver being selected from a plurality of wireless transceivers operating on independent wireless communication channels; and

communicating data and control information with the at least one wireless transceiver modularly received in the access point according to at least one protocol selected from a plurality of protocols supported by the plurality of wireless transceivers operating on independent wireless communication channels.

53. The access point of claim 52, wherein the plurality of wireless transceivers carried by the plurality of cards have substantially different operating characteristics.

54. An access point for establishing communications with a wired link, the access point comprising:

a housing;

receiving means for modularly receiving into the housing a plurality of wireless transceivers for operating on independent wireless communication channels;

interface means in the housing for communicating with wireless transceivers modularly received by the receiving means; and

processing means in the housing coupled to the interface means for controlling communications by wireless transceivers modularly received by the receiving means.

55. A method of establishing communications with a wired link through an access point, the method comprising:

modularly receiving at least one wireless transceiver in the access point, the at least one wireless transceiver being selected from a plurality of wireless transceivers operating on independent wireless communication channels; and

communicating data and control information with the at least one wireless transceiver modularly received in the access point according to at least one protocol selected from a plurality of protocols supported by the plurality of wireless transceivers operating on independent wireless communication channels.

* * * * *

Exhibit F

US007013138B2

(12) **United States Patent**
Mahany

(10) **Patent No.: US 7,013,138 B2**
(45) **Date of Patent: *Mar. 14, 2006**

(54) **LOCAL AREA NETWORK HAVING MULTIPLE CHANNEL WIRELESS ACCESS**

(75) Inventor: **Ronald L. Mahany**, Cedar Rapids, IA (US)

(73) Assignee: **Broadcom Corporation**, Irvine, CA (US)

(*) Notice: Subject to any disclaimer, the term of this patent is extended or adjusted under 35 U.S.C. 154(b) by 251 days.

This patent is subject to a terminal disclaimer.

(21) Appl. No.: **10/648,726**

(22) Filed: **Aug. 26, 2003**

(65) **Prior Publication Data**

US 2004/0042421 A1 Mar. 4, 2004

Related U.S. Application Data

(63) Continuation of application No. 09/357,429, filed on Jul. 20, 1999, now Pat. No. 6,665,536, which is a continuation of application No. 08/878,357, filed on Jun. 27, 1997, now Pat. No. 5,960,344, which is a continuation-in-part of application No. 08/772,895, filed on Dec. 24, 1996, now abandoned, which is a continuation-in-part of application No. 08/696,086, filed on Aug. 13, 1996, now abandoned, which is a continuation of application No. 08/238,180, filed on May 4, 1994, now Pat. No. 5,546,397, which is a continuation-in-part of application No. 08/197,392, filed on Feb. 16, 1994, now abandoned, which is a continuation-in-part of application No. 08/170,121, filed on Dec. 20, 1993, now abandoned.

(30) **Foreign Application Priority Data**

Jun. 3, 1996 (WO) PCT/US96/09474

(51) **Int. Cl.**
H04Q 7/00 (2006.01)

(52) **U.S. Cl.** **455/432**; 455/434; 455/435

(58) **Field of Classification Search** 375/131, 375/147, 132, 130; 455/434, 432, 435, 436, 455/338, 500, 444, 524, 456, 422, 466, 507, 455/515, 454; 370/350, 389

See application file for complete search history.

(56) **References Cited**

U.S. PATENT DOCUMENTS

5,291,516	A *	3/1994	Dixon et al.	375/131
5,790,587	A *	8/1998	Smith et al.	375/147
6,665,536	B1 *	12/2003	Mahany	455/434

* cited by examiner

Primary Examiner—Salvatore Cangialosi
(74) *Attorney, Agent, or Firm*—McAndrews, Held & Malloy, Ltd.

(57) **ABSTRACT**

A communication network having at least one access point supports wireless communication among a plurality of wireless roaming devices via a first and a second wireless channel. The access point comprises a first and a second transceiver. The first and second transceivers operate on the first and second wireless channels, respectively. Each of the plurality of wireless roaming devices are capable of communicating on the first and second wireless channel. In one embodiment, the first wireless channel is used to exchange data, while the second channel is used to manage such exchanges as well as access to the first channel. In an alternate embodiment, both channels are used to support communication flow, however the first channel supports a protocol that is more deterministic than that of the second channel. Allocation of ones of the plurality of wireless roaming devices from one channel to the next may occur per direction from the access point. It may also result from decisions made by each of the wireless roaming devices made independent of the access point. For example, a decision may be made based on the data type being transferred or based on the current channel load. Such factors may also be used by the access point for allocation determinations. In addition, allocation may be based on the type of roaming device involved, such as allocating peripherals to a slower channel.

40 Claims, 17 Drawing Sheets

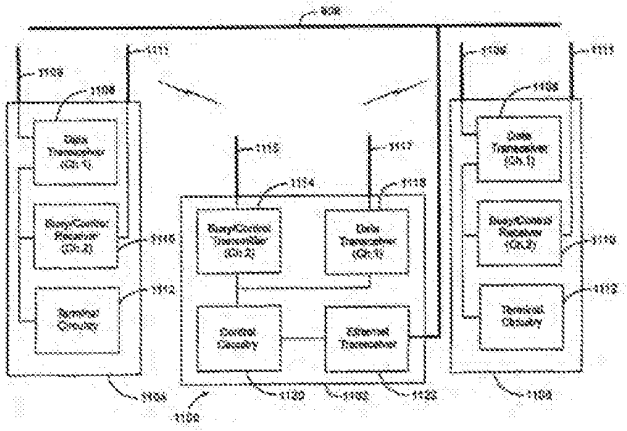

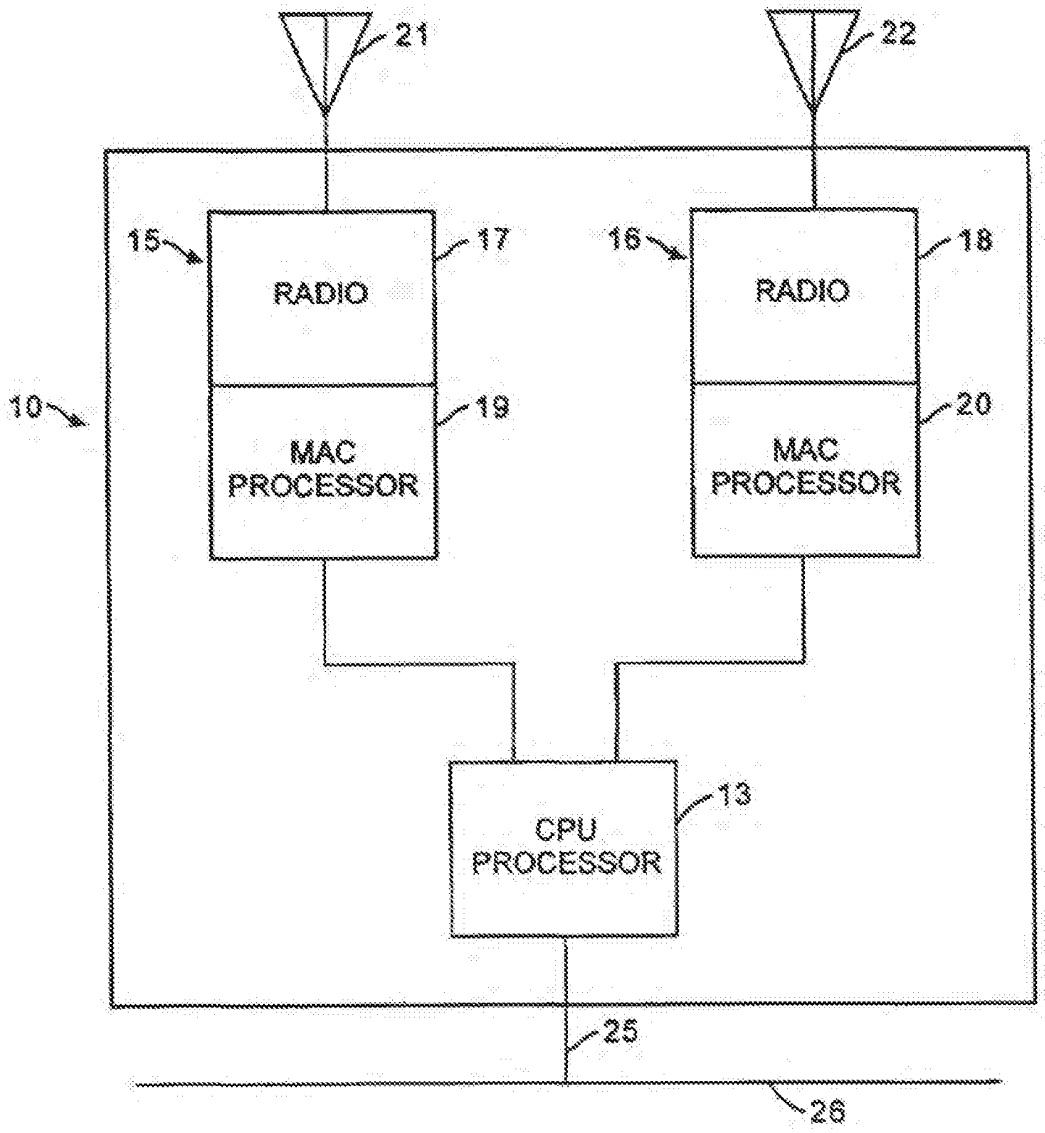
21
22
15
17
16
18
RADIO
RADIO
10
19
20
MAC PROCESSOR
MAC PROCESSOR
13
CPU PROCESSOR
25
26

Fig. 1

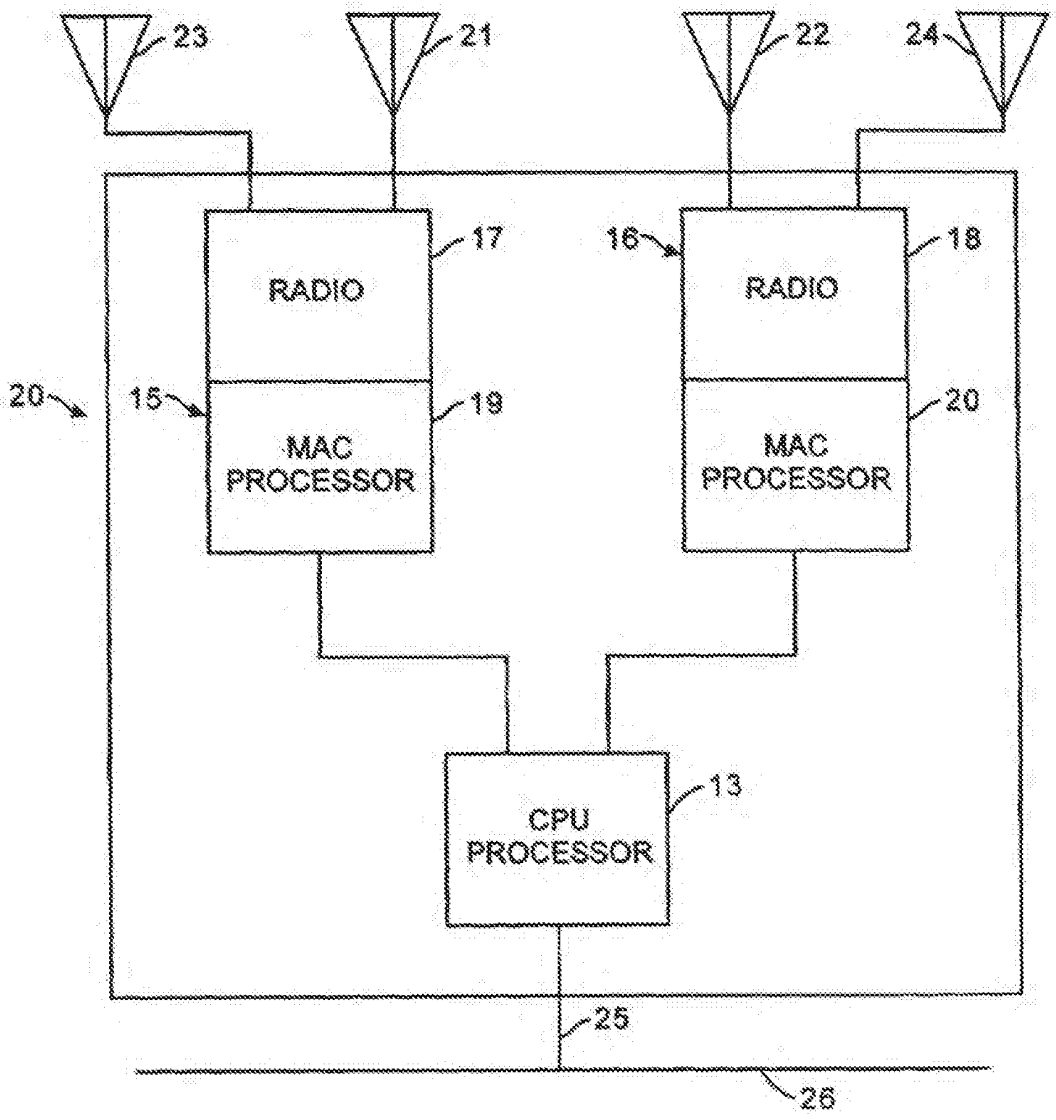
23
21
22
24
17
16
18
RADIO
RADIO
20
15
19
20
MAC PROCESSOR
MAC PROCESSOR
13
CPU PROCESSOR
25
26

Fig. 2

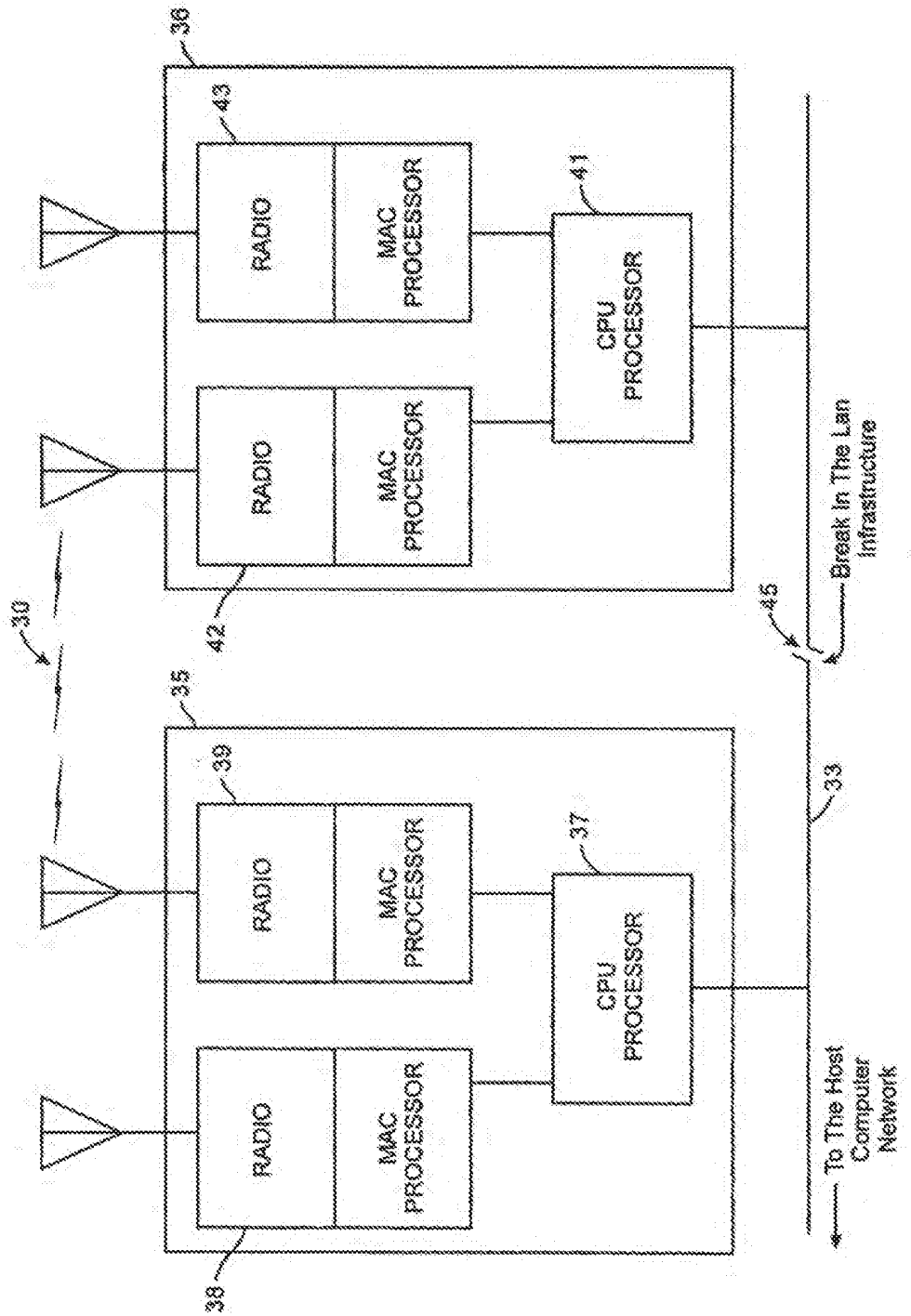
30
36
43
RADIO
MAC PROCESSOR
41
CPU PROCESSOR
RADIO
MAC PROCESSOR
42
35
39
RADIO
MAC PROCESSOR
37
CPU PROCESSOR
RADIO
MAC PROCESSOR
38
45
Break In The Lan Infrastructure
33
To The Host Computer Network

Fig.3

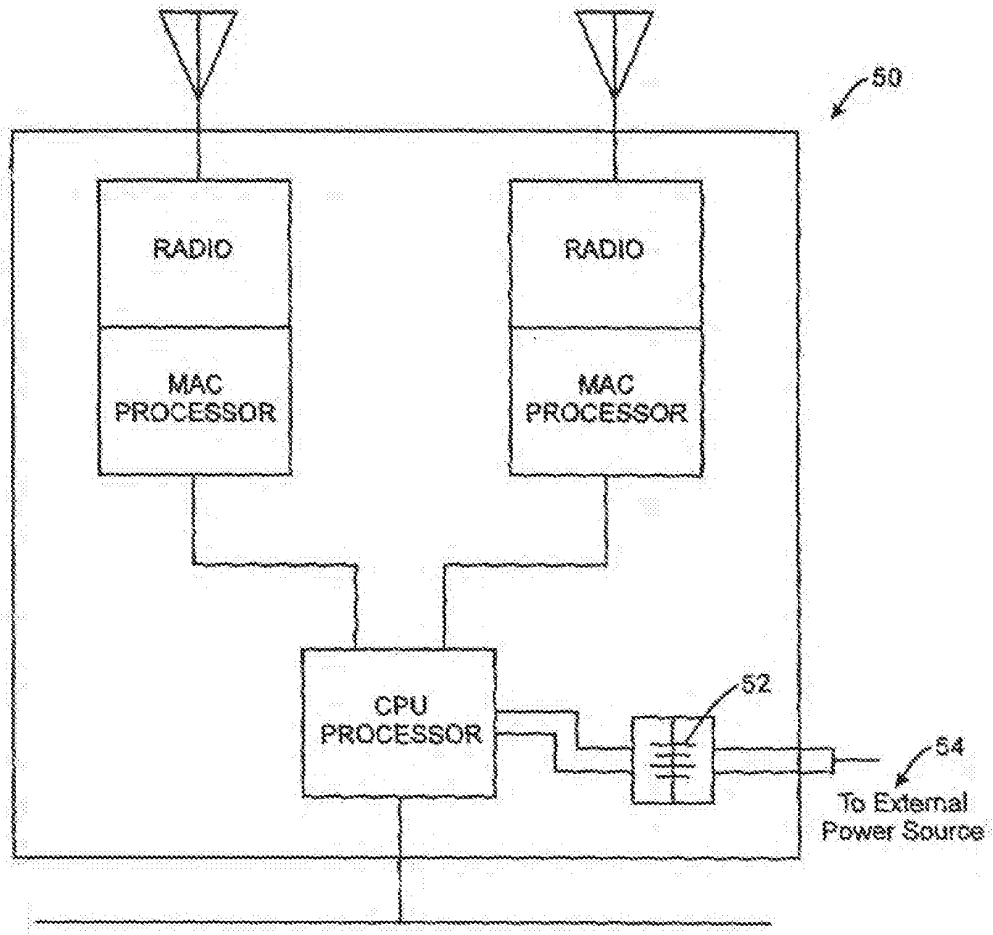
50
RADIO
MAC PROCESSOR
RADIO
MAC PROCESSOR
CPU PROCESSOR
52
54
To External Power Source

Fig. 4

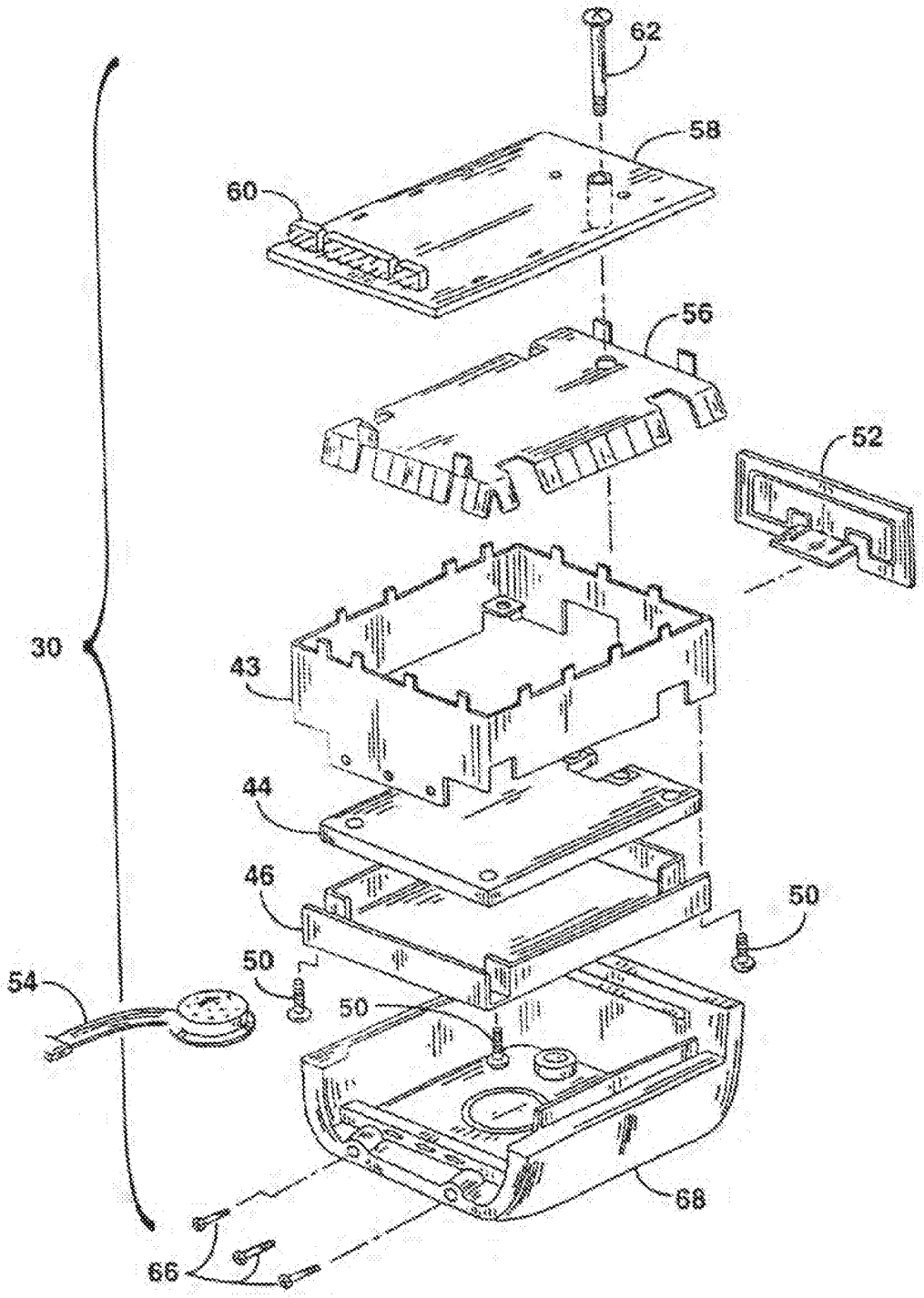

FIG. 7

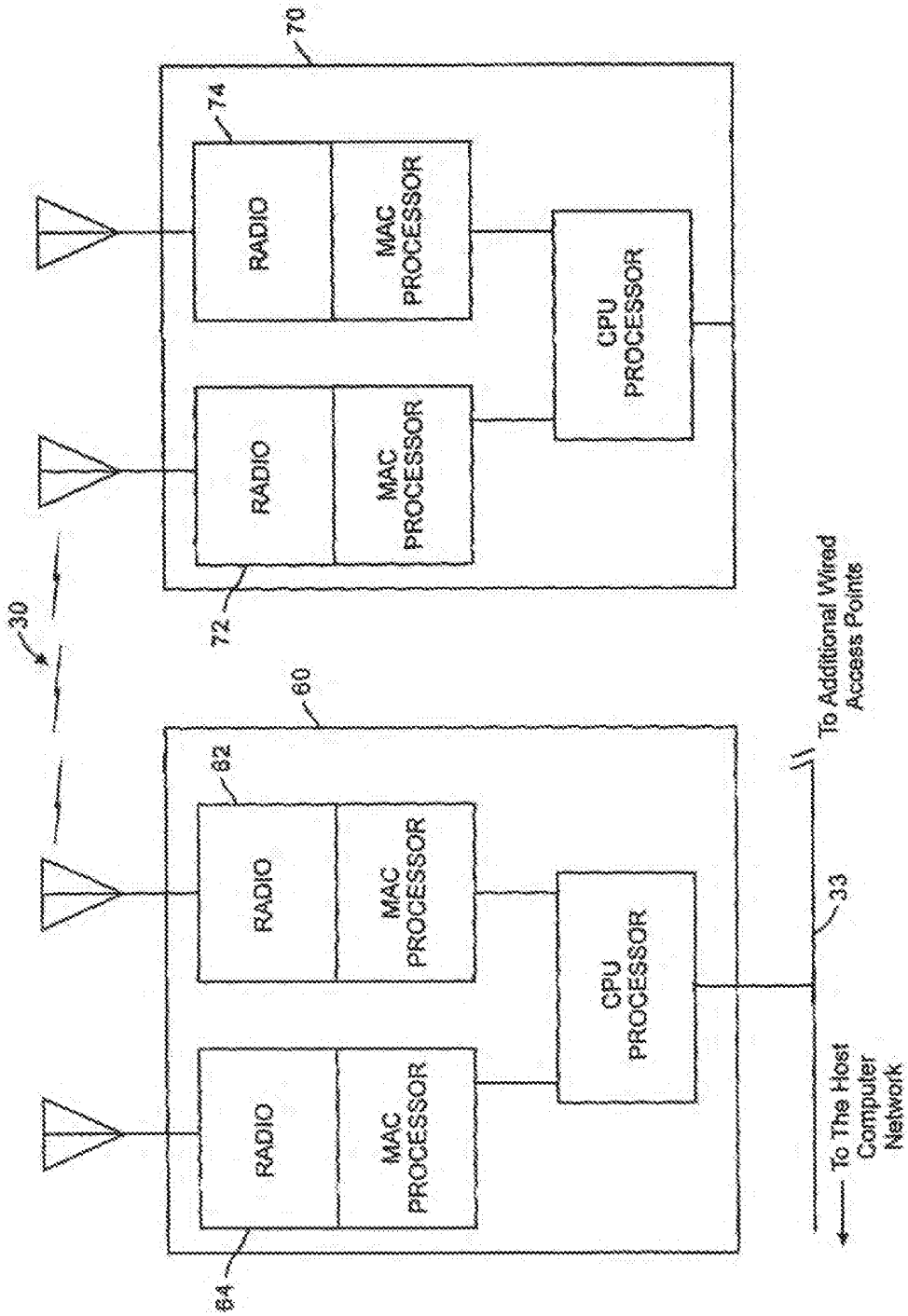
70
74
RADIO
MAC PROCESSOR
CPU PROCESSOR
RADIO
MAC PROCESSOR
72
30
60
82
RADIO
MAC PROCESSOR
CPU PROCESSOR
RADIO
MAC PROCESSOR
84
To Additional Wired Access Points
33
To The Host Computer Network

Fig.5

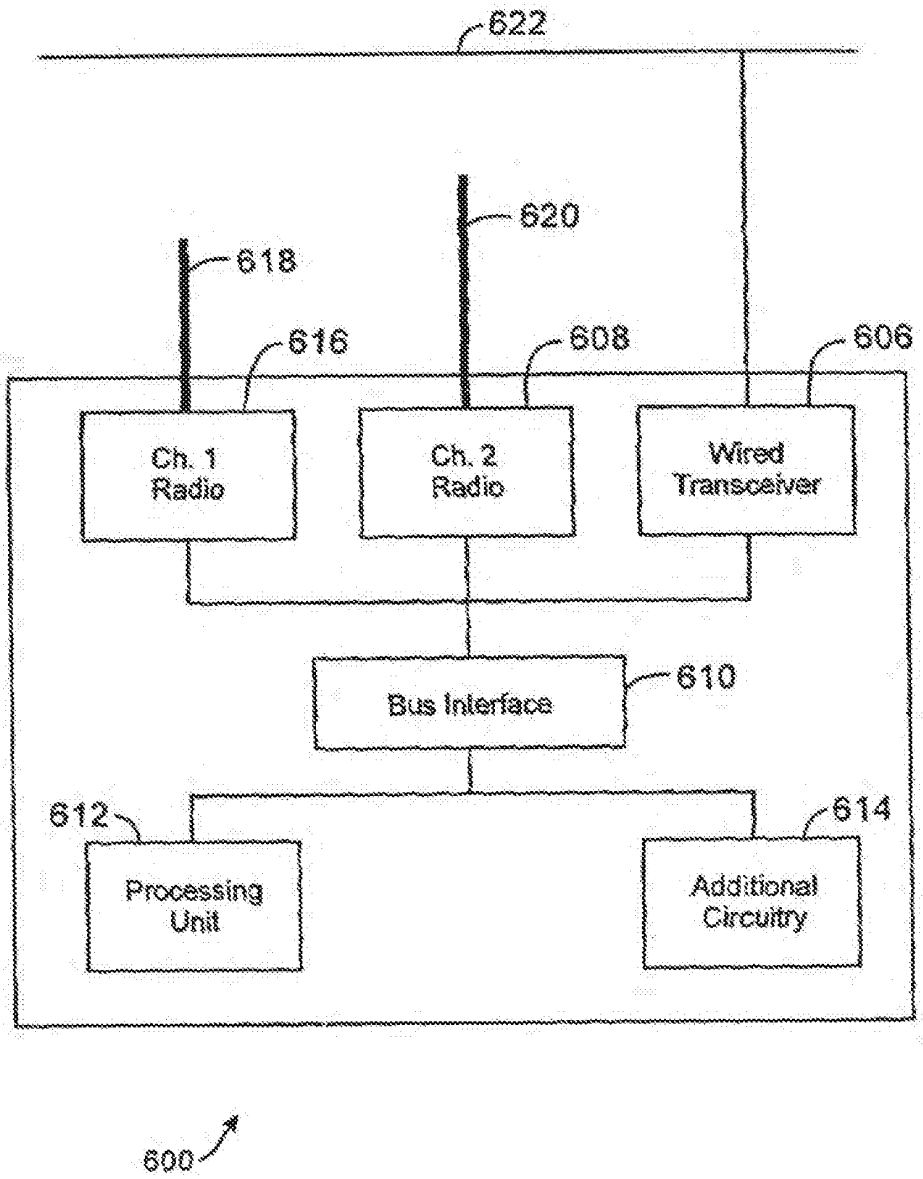
622
620
618
616
608
606
Ch. 1 Radio
Ch. 2 Radio
Wired Transceiver
Bus Interface
610
612
614
Processing Unit
Additional Circuitry
600

Fig. 6

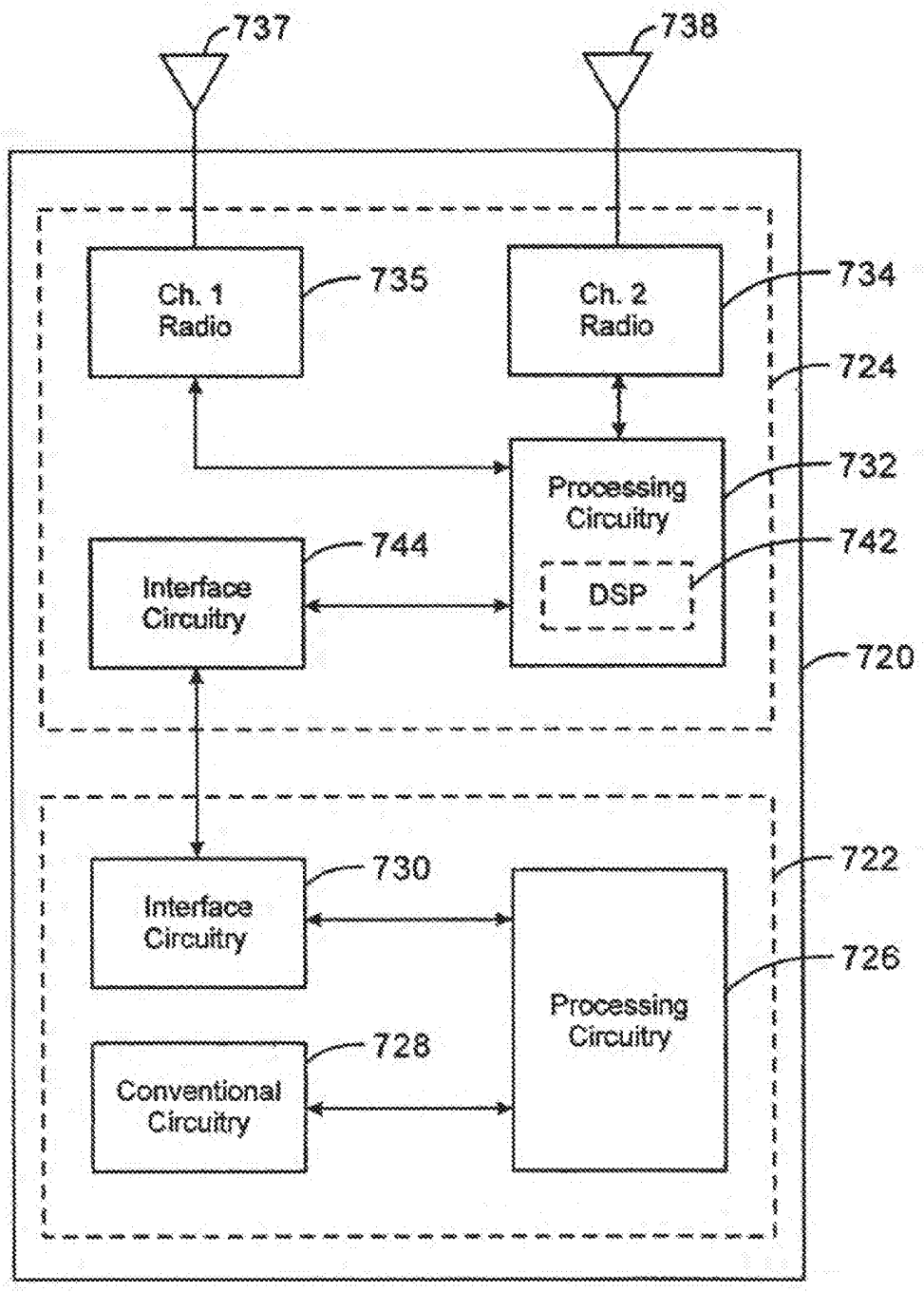
737
738
Ch. 1
Radio
735
Ch. 2
Radio
734
724
Processing
Circuitry
732
Interface
Circuitry
744
DSP
742
720
Interface
Circuitry
730
722
Processing
Circuitry
726
Conventional
Circuitry
728

Fig. 7a

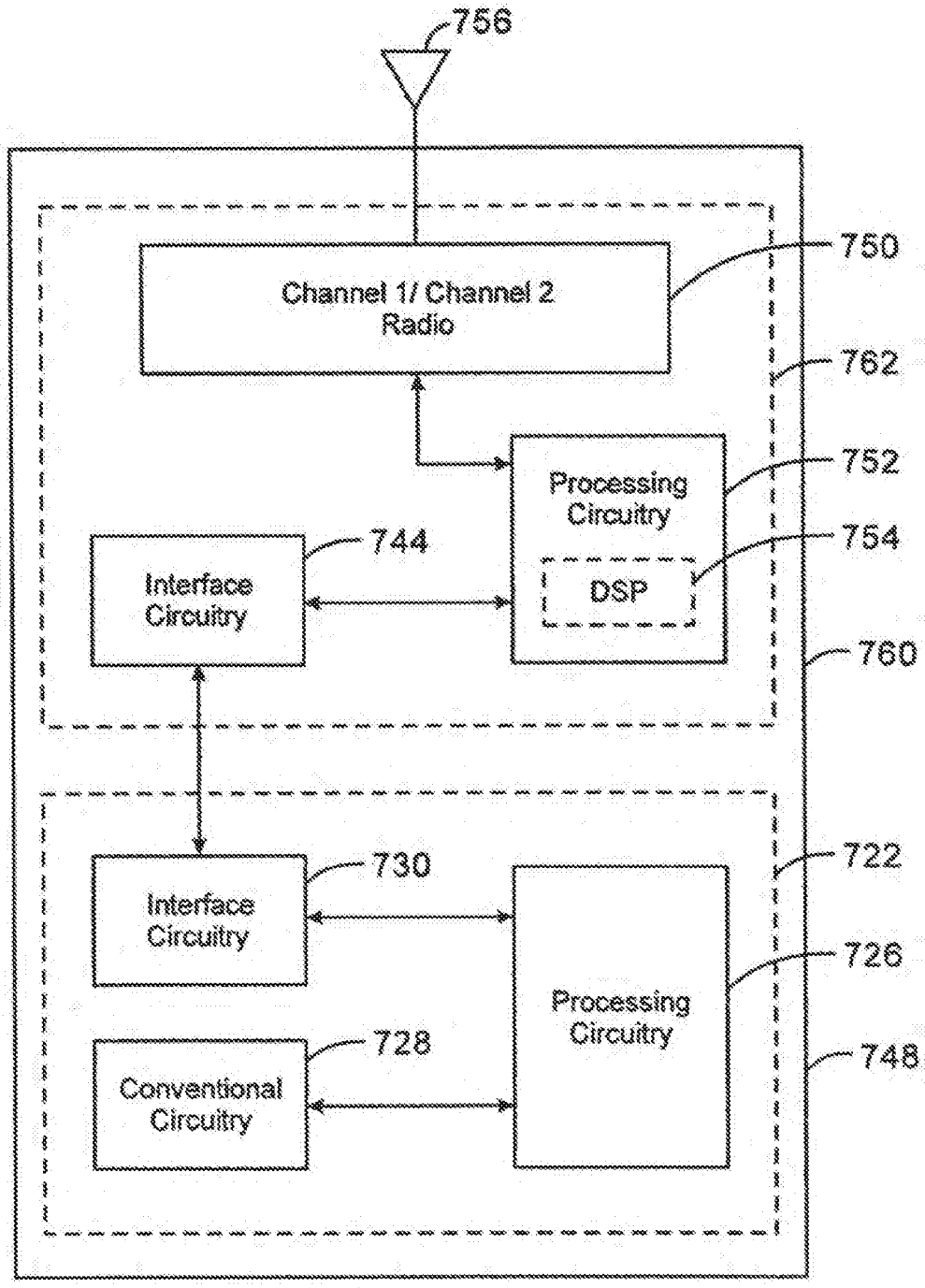
756
750
Channel 1/ Channel 2
Radio
762
752
Processing
Circuitry
754
DSP
744
Interface
Circuitry
760
722
730
Interface
Circuitry
726
Processing
Circuitry
728
Conventional
Circuitry
748

Fig. 7b

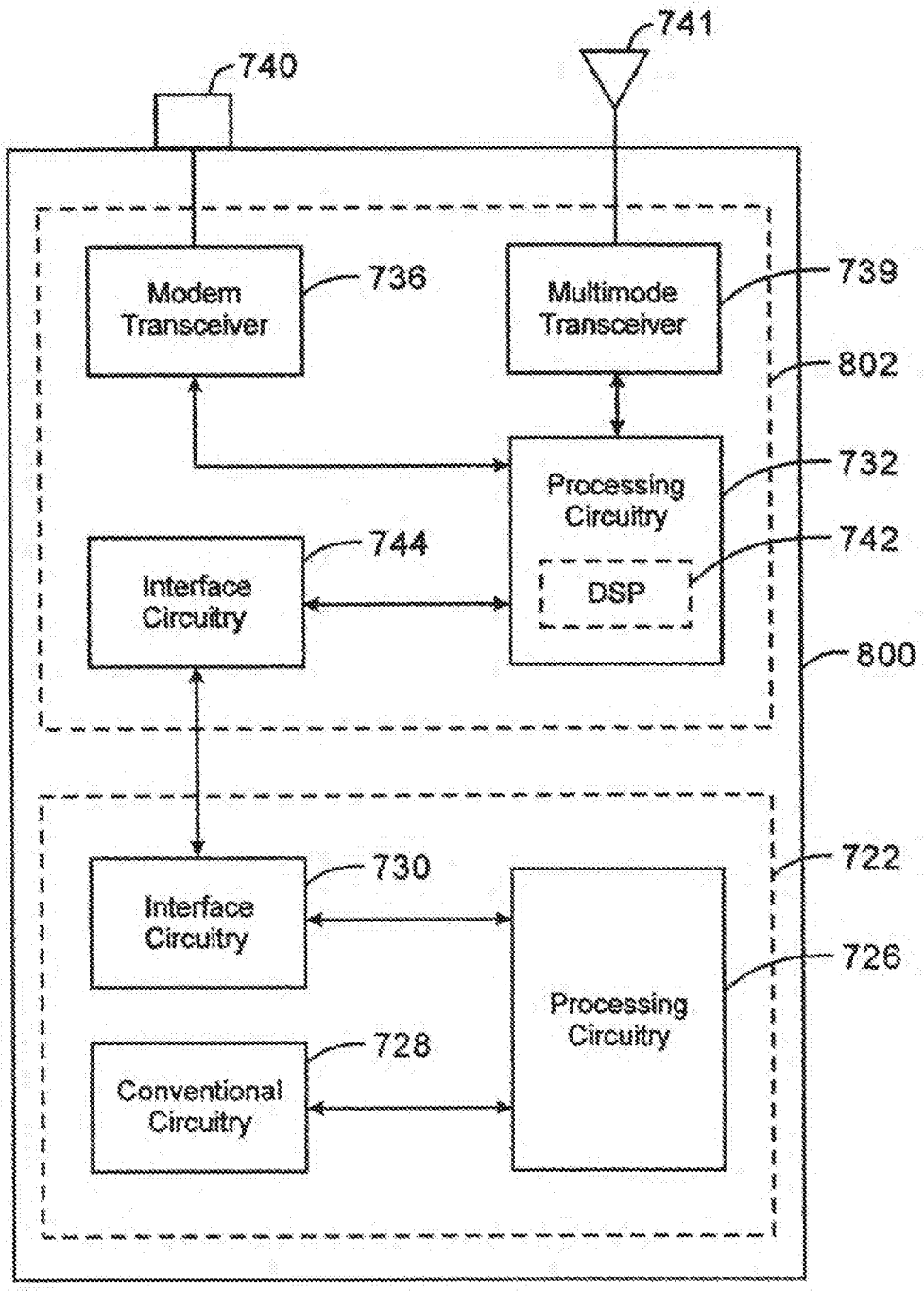
741
740
Modem Transceiver
736
Multimode Transceiver
739
802
Processing Circuitry
732
Interface Circuitry
744
DSP
742
800
Interface Circuitry
730
722
Processing Circuitry
726
Conventional Circuitry
728

Fig. 8

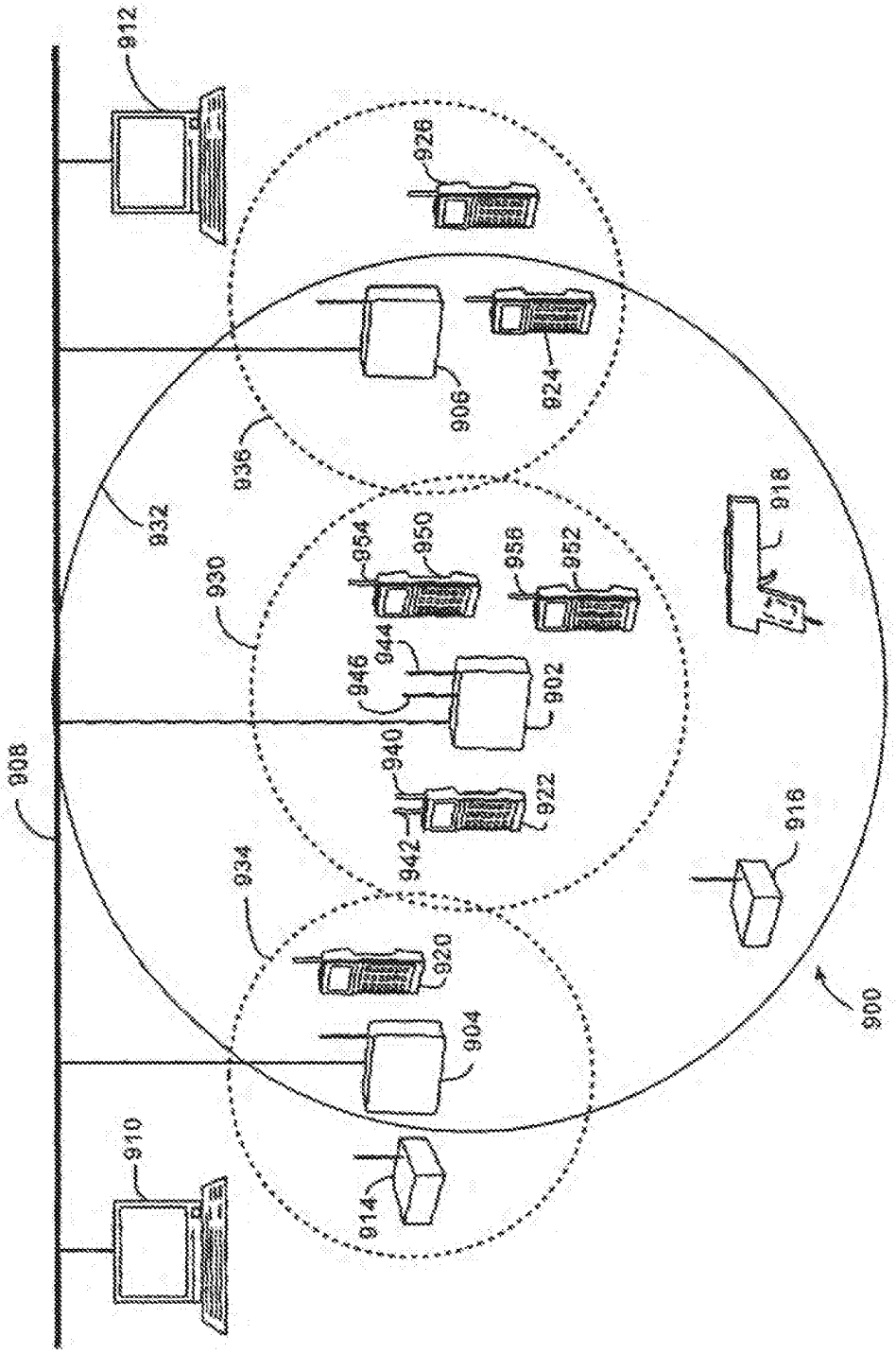
912
926
906
924
936
932
930
954
950
956
952
918
944
946
902
940
922
942
908
934
916
920
904
900
910
914

Fig.9

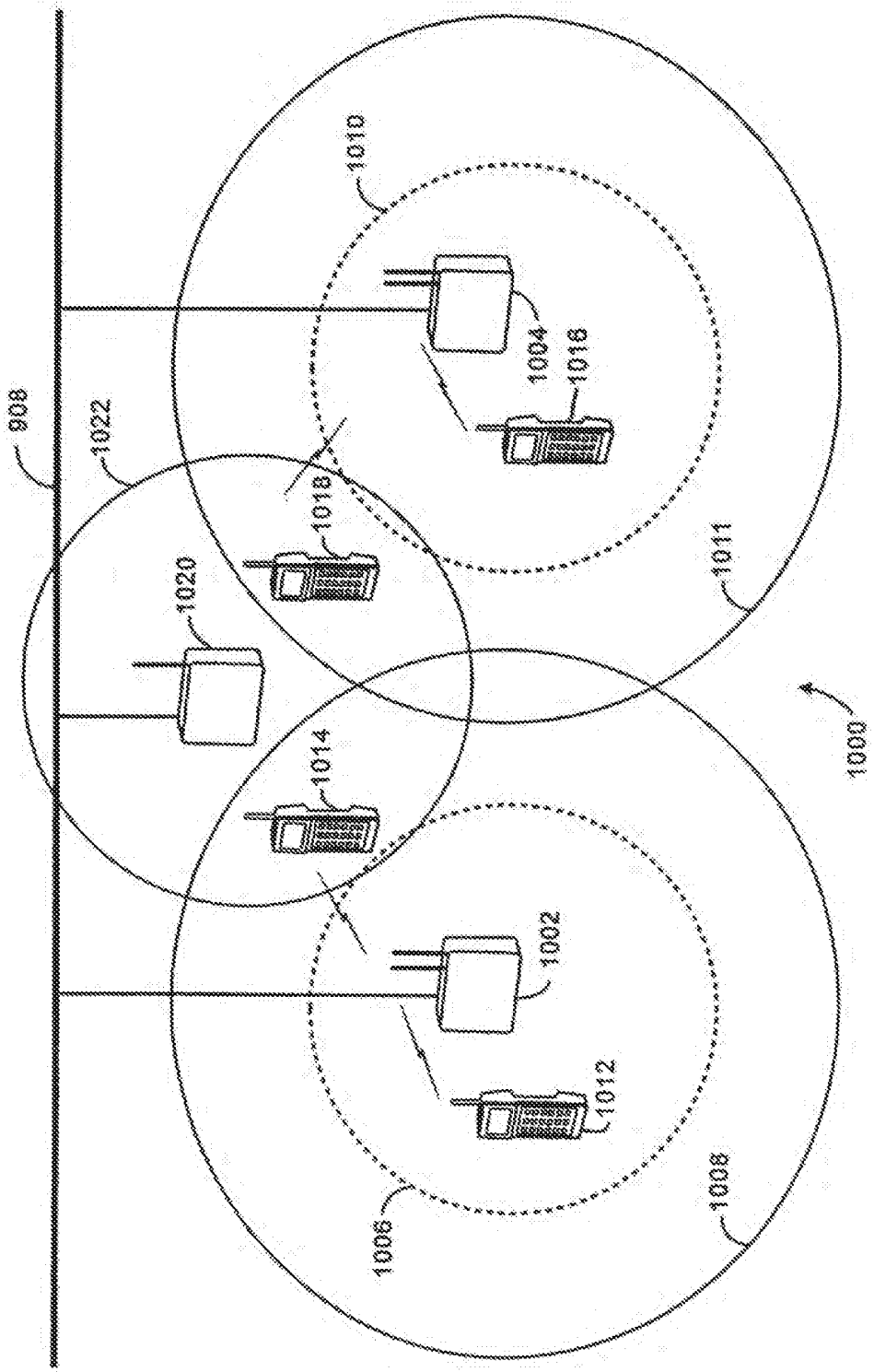
908
1022
1020
1010
1004
1016
1018
1014
1002
1012
1006
1008
1011
1000

Fig. 10

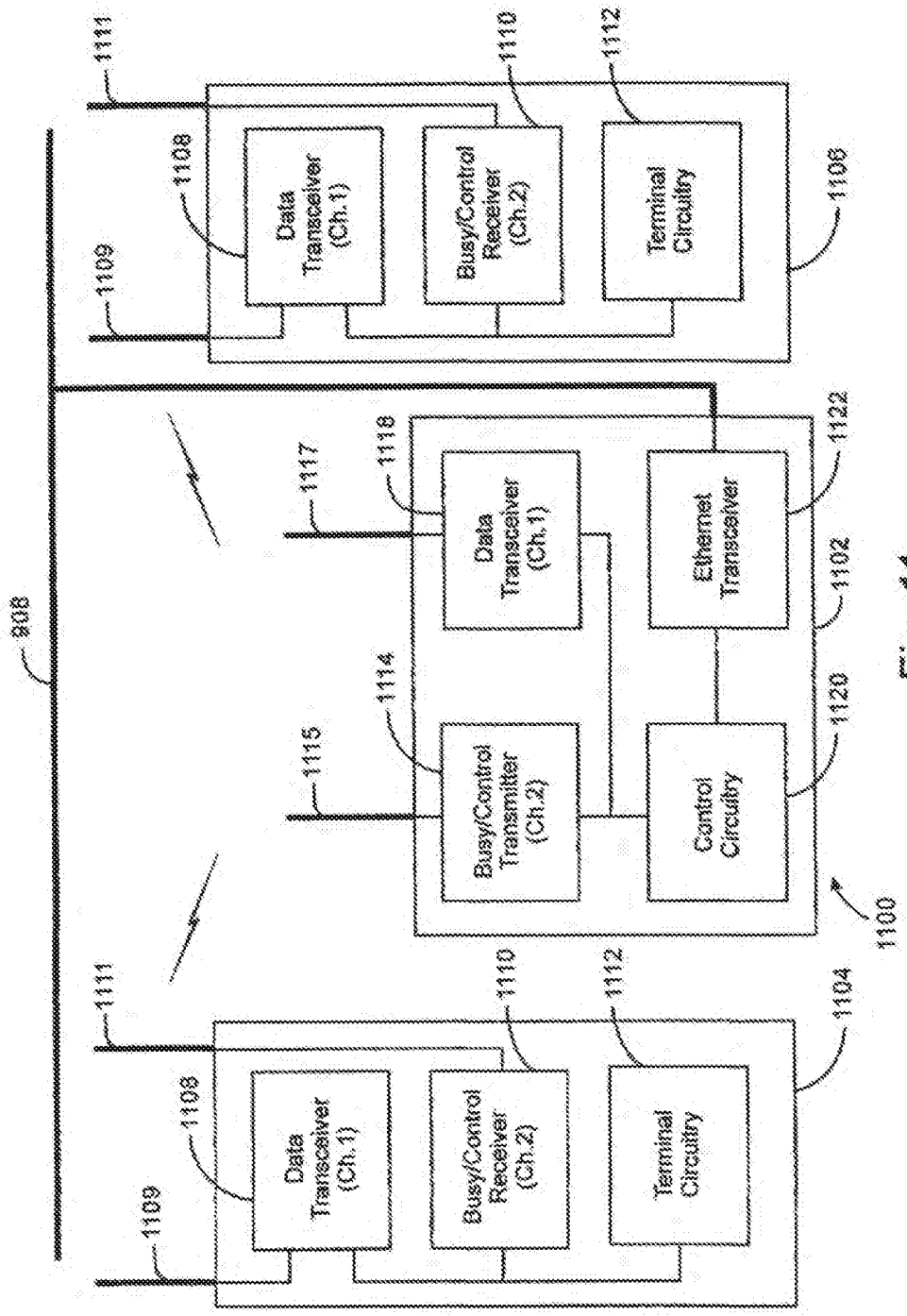
908
1111
1109
1108
Data Transceiver (Ch.1)
1110
Busy/Control Receiver (Ch.2)
1112
Terminal Circuitry
1106
1117
1118
Data Transceiver (Ch.1)
1122
Ethernet Transceiver
1102
1115
1114
Busy/Control Transmitter (Ch.2)
1120
Control Circuitry
1100
1111
1109
1108
Data Transceiver (Ch.1)
1110
Busy/Control Receiver (Ch.2)
1112
Terminal Circuitry
1104

Fig. 11

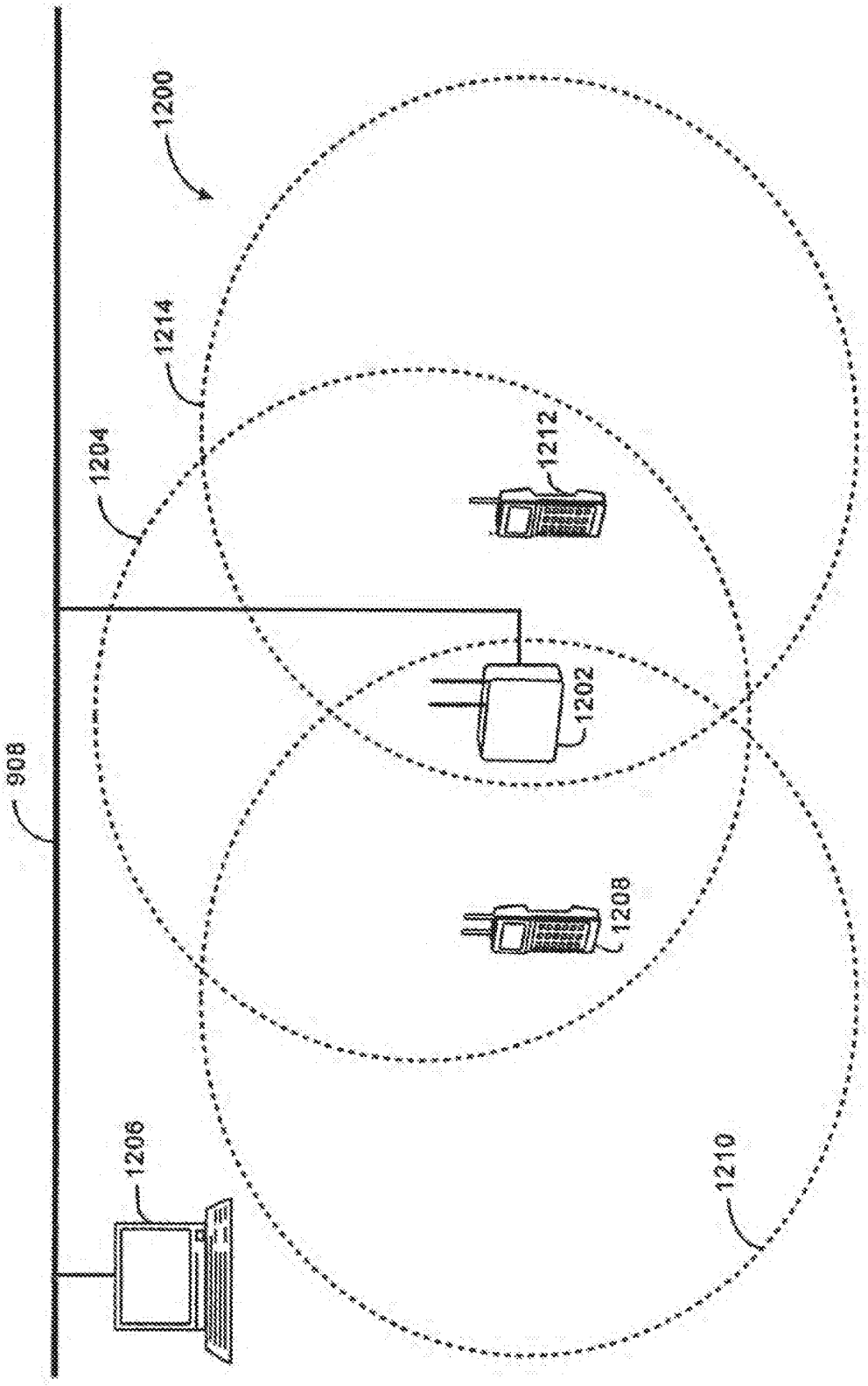

Fig. 12

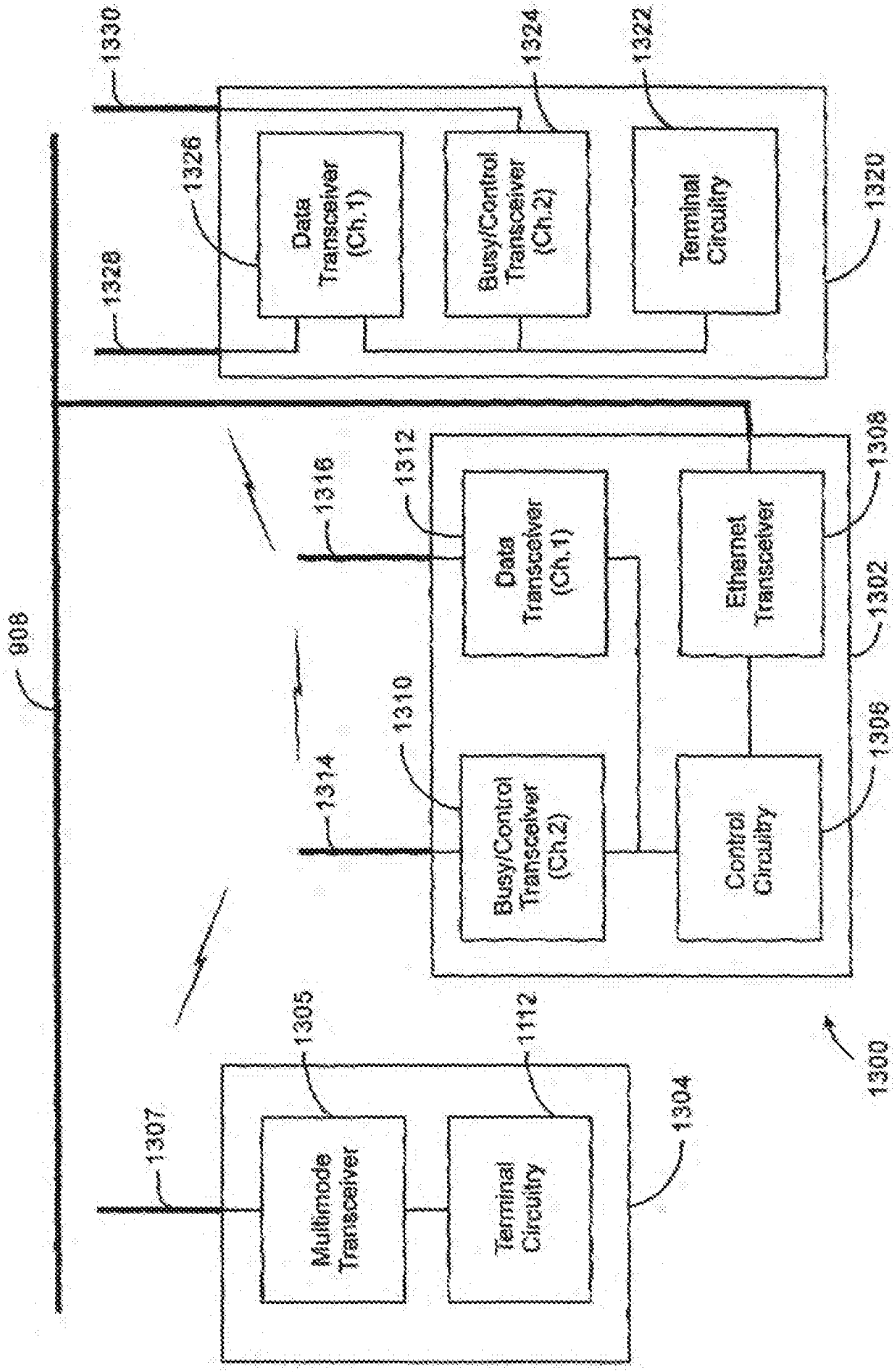
1330
1328
1326
Data Transceiver (Ch.1)
1324
Busy/Control Transceiver (Ch.2)
1322
Terminal Circuitry
1320
908
1316
1312
Data Transceiver (Ch.1)
1308
Ethernet Transceiver
1302
1314
1310
Busy/Control Transceiver (Ch.2)
Control Circuitry
1309
1300
1307
1305
Multimode Transceiver
1112
Terminal Circuitry
1304

Fig. 13

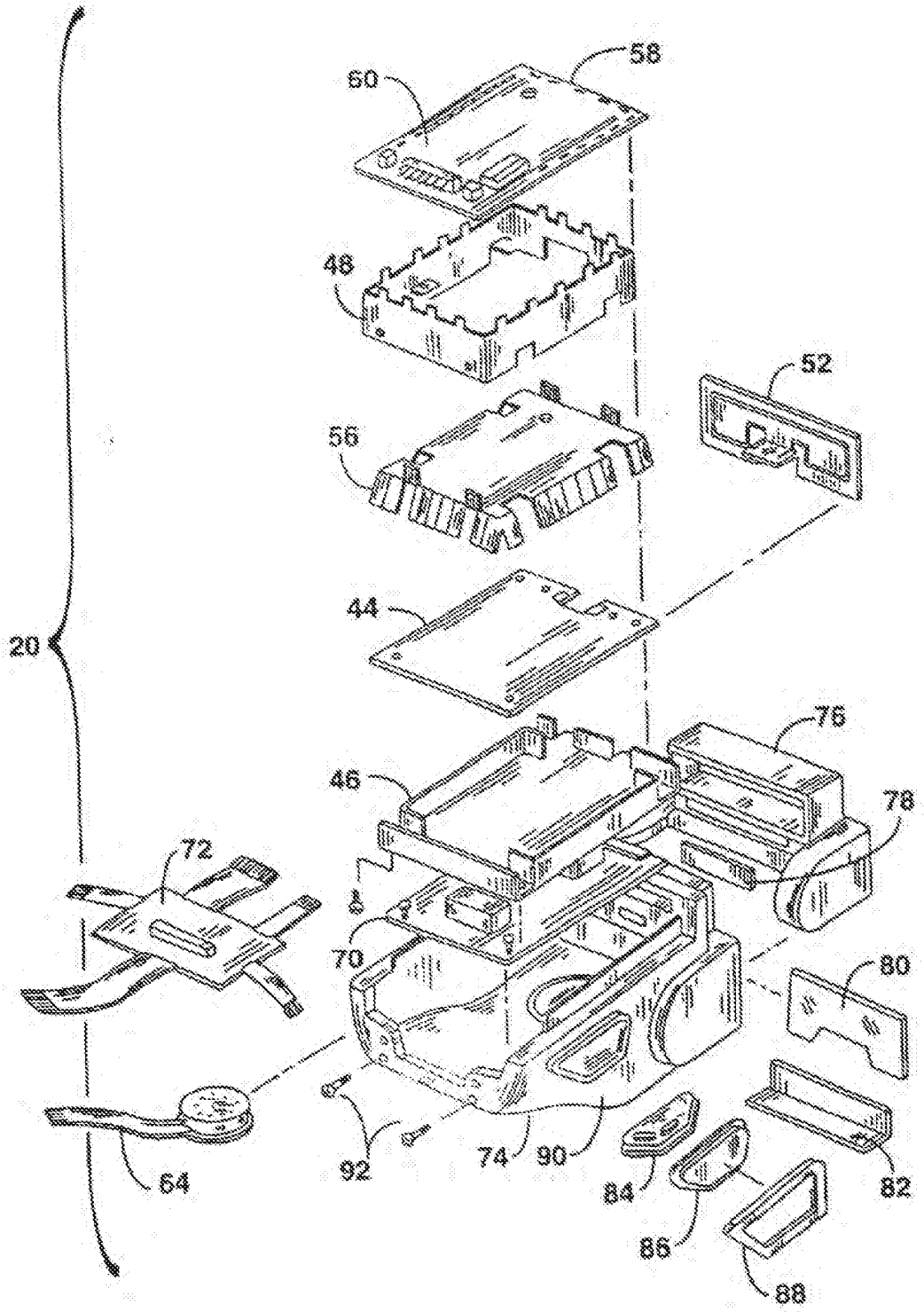

FIG. 8

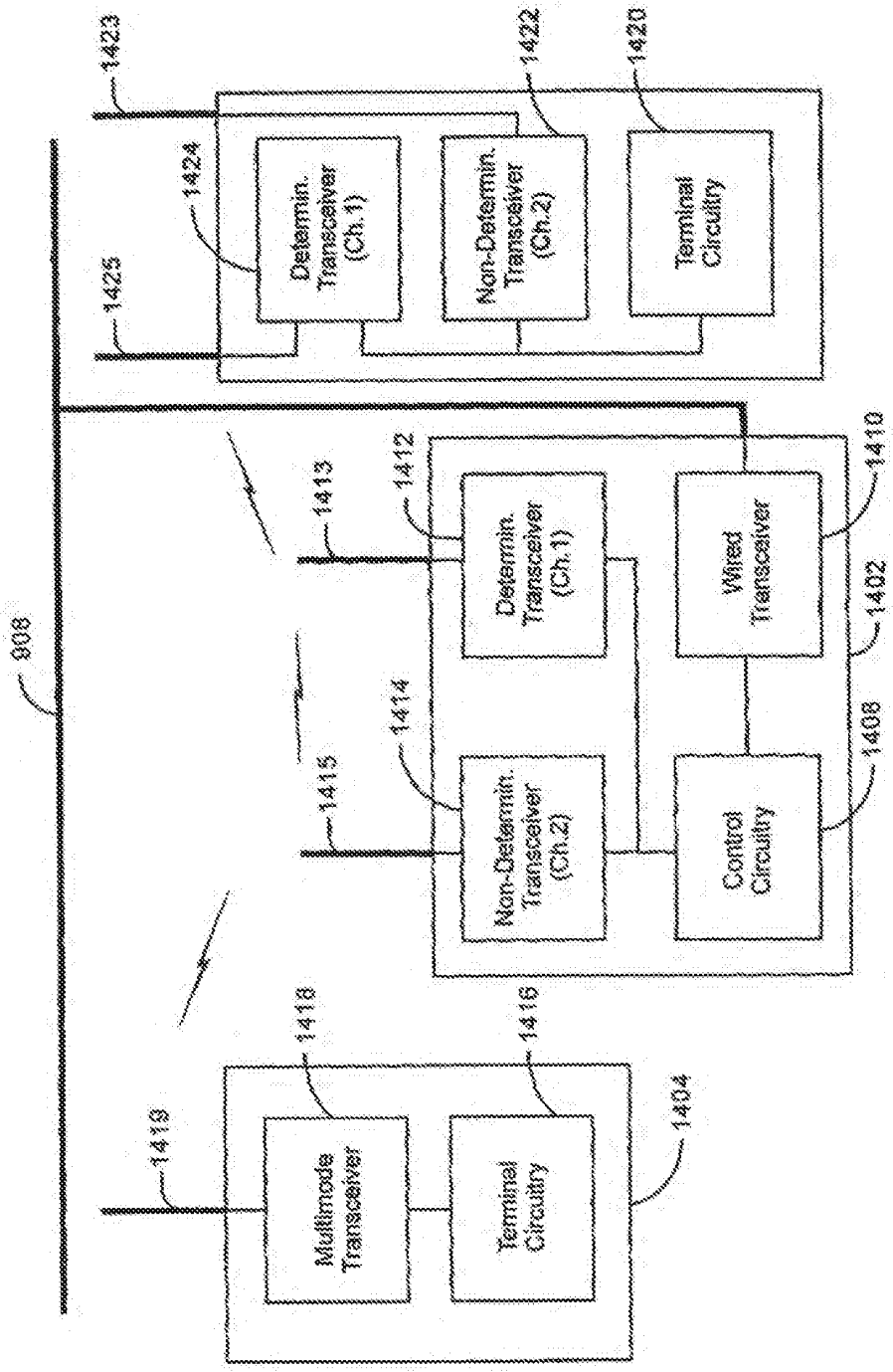
1423
1422
1420
1424
Determin. Transceiver (Ch.1)
Non-Determin. Transceiver (Ch.2)
Terminal Circuitry
1425
1413
1412
Determin. Transceiver (Ch.1)
Wired Transceiver
1410
1402
808
1415
1414
Non-Determin. Transceiver (Ch.2)
Control Circuitry
1408
1418
1416
1419
Multimode Transceiver
Terminal Circuitry
1404

Fig. 14a

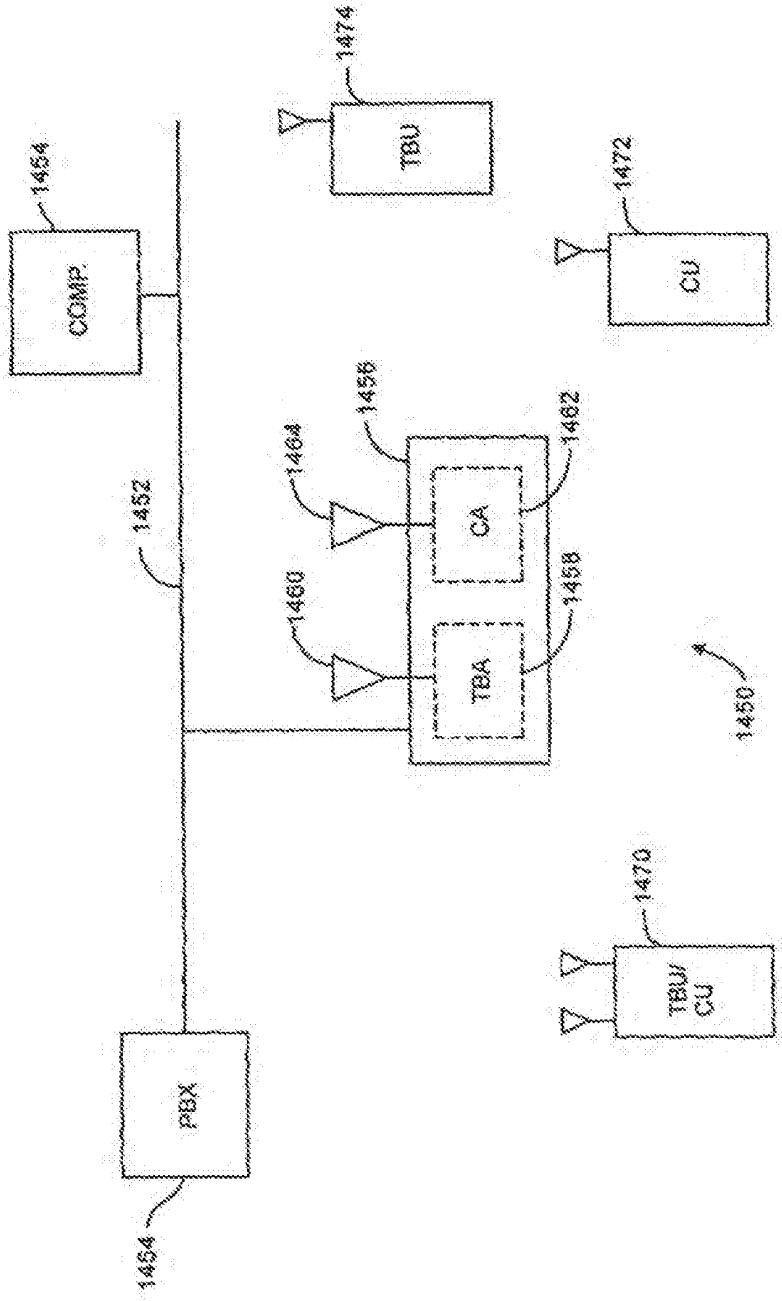
1474
TBU
1454
COMP.
1472
CU
1456
1464
1462
CA
1452
1460
1458
TBA
1450
1470
TBU/
CU
PBX
1454

Fig. 14b

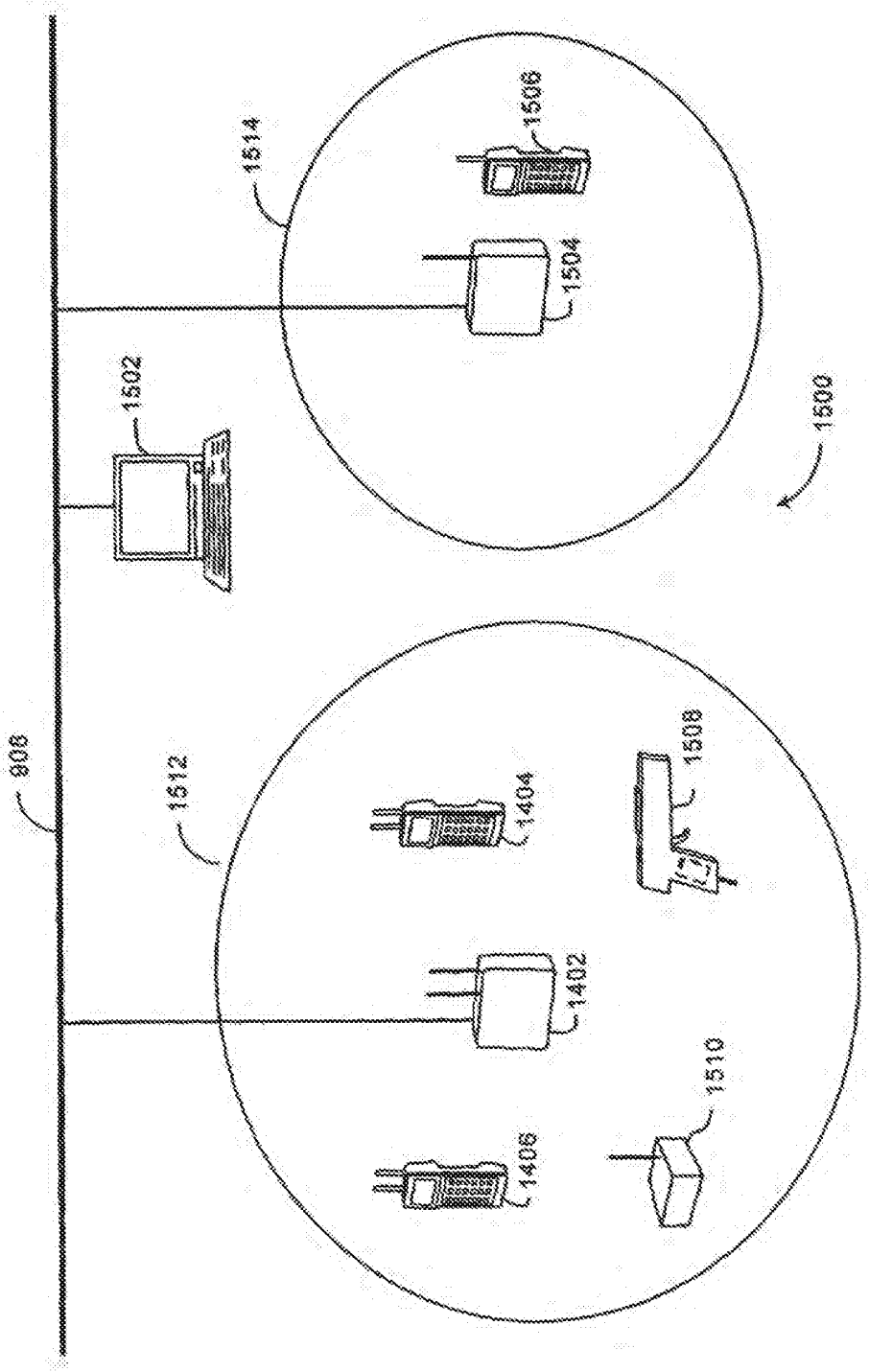

Fig. 15

LOCAL AREA NETWORK HAVING MULTIPLE CHANNEL WIRELESS ACCESS

CROSS-REFERENCE TO RELATED APPLICATIONS

The present application is a continuation of U.S. application Ser. No. 09/357,429, filed Jul. 20, 1999, now issued as U.S. Pat. No. 6,665,536, which is a continuation of U.S. application Ser. No. 08/878,357 filed Jun. 27, 1997 now U.S. Pat. No. 5,960,344, which is a continuation-in-part of U.S. application Ser. No. 08/772,895 filed Dec. 24, 1996, abandoned, which is a continuation-in-part of U.S. application Ser. No. 08/696,086 filed Aug. 13, 1996, abandoned, which is a continuation of U.S. application Ser. No. 08/238,180 filed May 4, 1994, now issued as U.S. Pat. No. 5,546,397, which is a continuation-in-part of U.S. application Ser. No. 08/197,392 filed Feb. 16, 1994, abandoned, which is a continuation-in-part of U.S. application Ser. No. 08/170,121 filed Dec. 20, 1993, abandoned.

The U.S. application Ser. No. 08/772,895 filed Dec. 24, 1996, also claims priority to PCT Application Ser. No. PCT/US96/09474 filed Jun. 3, 1996.

The present application is related to U.S. application Ser. No. 10/648,707 filed Aug. 26, 2003.

All of the aforementioned applications are hereby incorporated herein by reference in their entirety. In addition, U.S. Pat. No. 5,425,051 issued Jun. 13, 1995 to Ronald L. Mahany is also hereby incorporated herein by reference in its entirety.

BACKGROUND

1. Technical Field

The present invention relates generally to access points used in wireless local area networks, and more specifically to an access point which includes multiple wireless adapters.

2. Related Art

Wireless local area networks (WLAN's) use radio frequency transmissions to communicate between roaming computer devices and access points (or base stations). The access points are connected to an infrastructure that electronically connects all of the access points to a host system. The wired infrastructure and the access points make up an information distribution network used for the transfer of information and for communications.

In a wireless networking environment, various types of devices may need to communicate within a given area. When incompatibilities between device types arise, the wireless infrastructure must accommodate the various device types. Accommodating the different device types in a single infrastructure is generally difficult to accomplish. Further, devices within the wireless networking environment typically communicate differing types of data, each with its own priority and bandwidth requirements. Accommodating the various types of data with their related priorities often could not be accomplished by prior devices due to bandwidth limitations, conflicting priorities and incompatible standards within the wireless network.

In prior WLANs, a first wireless terminal that desired to communicate with a base station often could not detect transmissions from a second wireless terminal currently engaged in ongoing communication with the access point. As a result, the wireless terminal often initiated transmissions that collided with the ongoing communications. Operation of this type is referred to as a "hidden terminal" situation. To solve the hidden terminal situation, some prior

base stations were configured with a second transmitter for delivering a carrier signal on a "busy channel" whenever the base station was engaged in communication on the "data channel." All terminals were also fitted with a second receiver, tuned to the busy channel, and required to check the busy channel before initiating communication on the data channel. However, the additional power required, bandwidth used, hardware needed and associated cost made the busy channel solution undesirable for most applications.

Some prior WLANs attempted to solve operational difficulties by simply increasing the transmission capacity available on the infrastructure. Such expansion temporarily decreased conflicts in operation of the WLANs. However, the infrastructure, which is expensive to install, typically became overloaded quickly resulting in the same or similar problems.

SUMMARY OF THE INVENTION

The present invention is directed to communication network that supports communication within a premises. The communication network comprises an access point, a plurality of wireless roaming devices, a first wireless communication channel, and a second wireless communication channel. The access point itself comprises a first processing circuit, a first radio transceiver coupled to the first processing circuit, and a second radio transceiver coupled to the first processing circuit. Each of the plurality of wireless roaming devices comprising a second processing circuit, a third radio transceiver and a radio receiver. Therein, the first wireless communication channel that supports communication flow via the communication network, while the second wireless communication channel is used to manage the flow of communication through the first wireless communication channel. In addition, the first and third radio transceivers are operable on the first wireless communication channel, while the second radio transceiver and the radio receiver are operable on the second wireless communication channel.

The communication network also supports various other aspects of the present invention. For example, the access point may further comprise a wired communication interface circuit coupled to the first processing circuit. Selective participation on the first and second communication channels may also provide further benefits. In one embodiment, each of the plurality of wireless roaming devices utilizes the radio receiver on the second wireless communication channel before participating with the third radio transceiver on the first wireless communication channel. In another, each utilizes the radio receiver on the second wireless communication channel to gain access with the third radio transceiver on the first wireless communication channel. Each may also or alternatively utilize the second wireless communication channel to identify ongoing communication on the first wireless communication channel to, perhaps, provide an indication as to when channel capacity may become available.

Other aspects may be found in an alternate communication network which also supports communication within a premises. This communication network comprises an access point, first and second wireless communication channels and plurality of wireless roaming devices. The first wireless communication channel has first communication flow characteristics, while the second wireless communication channel has second communication flow characteristics. The first and second radio transceivers participate on the first and second wireless communication channels, respectively. Therein, each of the plurality of wireless roaming devices

comprises a second processing circuit and means for selectively participating on the first and second wireless communication channels.

The access point may also comprise a wired communication interface circuit coupled to the first processing circuit that may itself comprise a first and a second microprocessor. Additionally, at least one of the plurality of wireless roaming devices may participate on the first wireless communication channel while the other of the plurality of wireless roaming devices participates on the second wireless communication channel. Although the at least one of the plurality of wireless roaming devices may participate on the first wireless communication channel as directed by the access device, other variations and combinations are also possible. For example, at least one of the plurality of wireless roaming devices may participate on the first wireless communication channel to exchange a specific type of data, and/or may participate based on current channel conditions. Such participation may be based the fact that, in some embodiments, the second wireless communication channel is more deterministic than the first wireless communication channel.

In any of the aforementioned embodiment, the communication network may comprise at least a second access point. Other variations and aspects of the present invention will become apparent to ones of ordinary skill in the art after reviewing the entire specification and drawings.

BRIEF DESCRIPTION OF THE DRAWINGS

FIG. **1** is a schematic representation of a high reliability access point in accordance with the present invention.

FIG. **2** is a schematic representation of another high reliability access point of the present invention utilizing an antenna diversity scheme at each wireless adapter.

FIG. **3** is a representation of a distribution network for a wireless LAN system utilizing high reliability access points.

FIG. **4** is a schematic representation of a high reliability access point with a backup power supply.

FIG. **5** is a schematic representation of a remote high reliability access point connecting to the distribution network.

FIG. **6** is block diagram illustrating an embodiment of an access point built in accordance with the present invention which includes two radios and a wired network interface, a first one of the radios operable on a first channel and a second one of the radios operable on a second channel.

FIG. **7***a* is a block diagram illustrating an embodiment of a portable data terminal according to the present invention, the portable data terminal having a single PCMCIA card that contains two radios, a first one of the radios operable on the first channel and a second one of the radios operable on the second channel.

FIG. **7***b* is a block diagram illustrating an alternative embodiment of the portable data terminal of FIG. **7***a*, wherein the single PCMCIA card includes a single radio operable on the first channel and the second channel and controlled by the processing circuitry.

FIG. **8** is a block diagram illustrating an alternative embodiment of a portable data terminal according to the present invention, the portable data terminal having a single PCMCIA card that contains a multi-channel wireless transceiver and a wired network interface.

FIG. **9** is a diagram illustrating a communication system built and operating according to the present invention, the communication system including at least one access point having multiple radios, portable terminals having multiple radios and portable terminals having multi-channel radios.

FIG. **10** is a diagram illustrating a communication system built and operating according to the present invention wherein one of the access points facilitates communication between portable terminal units operating on different channels within its cell by routing communication between two of its radios.

FIG. **11** is a block diagram illustrating an embodiment of a communication system according to the present invention wherein an access point uses a dedicated control/busy channel transmitter to manage transmissions between the access point and a plurality of roaming portable data terminals within its cell.

FIG. **12** is a drawing illustrating advantageous operation of the access device and portable data terminals of FIG. **11** when two roaming terminals encounter hidden terminal conditions.

FIG. **13** is a block diagram illustrating an alternate embodiment of the communication system of the present invention wherein an access point includes a dedicated control/busy channel transceiver and roaming data terminals communicate with the access point using either frequency nimble multi-channel transceivers or dedicated control/busy channel transceivers.

FIG. **14***a* is a block diagram illustrating a communication system of the present invention wherein access points and portable data terminals operate on a deterministic first channel and a non-deterministic second channel and the system routes communications on the channels based upon system conditions.

FIG. **14***b* is a diagram illustrating operation of a communication system of the present invention having both wired and wireless communication capability that includes at least one access point providing communication over a deterministic, time bounded first channel and a non-deterministic, contention access second channel.

FIG. **15** is a diagram illustrating the use of the access points and portable data terminals of FIG. **14***a* wherein the system routes various transmissions within the network system according to system conditions such as channel activity, data type and data priority.

DETAILED DESCRIPTION

Referring now to the drawings wherein like reference numerals designate identical or corresponding parts throughout the several views, FIG. **1** shows a high reliability access point built in accordance with the present invention. An access point is a base station on a wireless local area network with which roaming portable or mobile computer devices can connect and communicate. The access point is typically part of an overall distribution network which is connected to a host computer or entire computer local area network (LAN). The access points and the infrastructure make up the distribution network and allow for communications between the roaming computer devices and the host computer or entire computer local area network (LAN).

A high reliability access point **10** of the present invention includes a central processing unit CPU processor **13** and at least two wireless adapters **15** and **16**. Each of the wireless adapters **15** and **16** include a radio **17** and **18**, a media access control (MAC) processor **19** and **20** and an antenna **21** and **22**, respectively. The radios and antennas are used for RF transmission and reception. The MAC processor controls low level protocol functions including controlling the operation of the radio, radio channel, error control, e.g., ARQ or Selective Response, and communication with the CPU processor **13**. The CPU processor **13** controls the high-level

communications protocol functions and controls the interface **25** between the high reliability access point **10** and the infrastructure **26**. In a preferred embodiment there is a PCMCIA standard interface between the wireless adapters and the access point.

The distribution network is comprised of all of the access points and the infrastructure which connects all of the access points. A host computer or an entire host network is connected to the distribution network. The distribution network allows computer devices to communicate with the host computer or host network.

The division between what is high level protocol, and thus handled by the CPU processor, and what is low level protocol, and thus handled by the MAC processor, can vary greatly depending upon the intelligence level of the MAC processor. In a preferred embodiment, the infrastructure conforms to an industry standard wired LAN such as Ethernet. The MAC processor can be made very intelligent and therefore capable of handling a great deal of radio specific protocol. On the other hand, the MAC processor can be minimally intelligent and handle only the most basic protocol functions allowing the CPU processor to handle the majority of the protocol functions.

Utilizing multiple wireless adapters in a single access point, as well as incorporating independent intelligence and low level protocol responsibility into each wireless adapter, yields several significant advantages. The examples depicted in FIGS. **1-4** show access points using only two wireless adapters per access point. Utilizing two wireless adapters in the manner discussed below will greatly increase the reliability of a particular access point, as well as increase the reliability of the entire distribution network. Access points could use more than two wireless adapters and the utilization of the multiple wireless adapters would be similar to the implementation describes using only two wireless adapters with addition protocol being required to handle the increased redundancy and to allow for more sophisticated self monitoring.

Referring still to FIG. **1**, the CPU processor **13** can designate the RF address to which each wireless adapter **15** and **16** is to respond. The CPU processor **13** can, but need not, assign the same address to each wireless adapter. Therefore, in one configuration, the CPU processor **13** can designate that each of the wireless adapters **15** and **16** respond to the address assigned to that access point **10**. Designated as such, both radios **17** and **18** will be operating simultaneously on the same channel. In a frequency hopping system, both radios **17** and **18** would be operating on the same hopping sequence, and be mutually synchronized to that hopping sequence.

Accordingly, the wireless adapters **15** and **16** are configured to receive incoming transmission from roaming computer devices within range. As both wireless adapters **15** and **16** receive the transmission, each adapter can evaluate the quality information to the CPU processor **13**. The CPU processor **13** uses the quality information to determine which wireless adapter is receiving the higher quality signal. The CPU processor **13** will then typically choose to receive the incoming transmission on the wireless adapter with the higher signal quality and respond using the same adapter.

The antennas **21** and **22** can be positioned to allow the access point **10** to implement an antenna diversity scheme which will help reduce the negative effects caused by multipath interference. Antenna diversity can be accomplished in various ways. For example, the antennas can be placed sufficiently far apart, typically greater than a quarter wavelength apart, or the antennas can be positioned at a 90 degree angle with respect to each other to create a polarization antenna diversity scheme.

With an antenna diversity scheme in place, the signal from a wireless computer device will be received differently on each antenna due to multipath signal propagation. Therefore, each wireless adapter may receive a signal of a different quality. The CPU processor **13** can choose which wireless adapter to use based upon the quality of the received signal. Each wireless adapter includes the capability of measuring signal quality and only good messages will be forwarded on to the CPU processor **13**. The quality can be appended to the message or can be presented to the CPU in a memory register.

Referring now to FIG. **2**, another high reliability access point **20** built in accordance with the present invention is shown. In this embodiment, in addition to having an antenna diversity scheme at the access point level, there is an antenna diversity scheme at the wireless adapter level. Each wireless adapter **15** and **16** includes at least two antennas **21** and **23**, **22** and **24**, respectively positioned to create an antenna diversity scheme. Thus for the wireless adapter **15** the antennas **21** and **23** are either positioned sufficiently far apart, more than a quarter wavelength, or the antennas **21** and **23** are positioned in an asymmetrical or orthogonal manner to provide polarization diversity. The antennas **22** and **24** for the wireless adapter **26** are placed in a similar manner.

In this embodiment, an incoming signal is received on both antennas **21** and **23** of the wireless adapter **15**. The MAC processor **19** then determines the quality if the signal coming in on each of the antennas **21** and **23** connected to the wireless adapter **15**. Based upon the signal quality information, the MAC processor **19** will choose which of the antennas **21** and **23** to use to receive the incoming transmission. The MAC processor will also forward the signal quality information regarding the selected antenna to the CPU processor **13**. The wireless adapter **16** will perform a similar process and forward the signal quality information for its best antenna to the CPU processor **13**. The CPU processor **13** can then determine which wireless adapter is receiving the highest quality signal and use that wireless adapter to receive the incoming transmission and respond to the transmitting station.

When a high reliability access point wishes to transmit a message, such as an acknowledgment of a received message, to a roaming computer device, the CPU processor **13** will utilize the received quality signal information to determine which wireless adapter to use to send the message. Likewise, if the wireless adapter is utilizing an antenna diversity scheme it will also select the most appropriate antenna for transmitting a message.

While one of the wireless adapters is transmitting, the other wireless adapter can operate as a promiscuous listener to determine if the correct message is being sent. For example, referring to FIG. **1**, if the CPU processor **13** is sending a message to a roaming computer device via wireless adapter **16**, wireless adapter **17** can operate in the receive mode and monitor the message being sent by the wireless adapter **16**. This provides a local loop back capability and allows the access point to perform self-monitoring. If the CPU processor **13** determines that one of the wireless adapters is not operating correctly, the malfunctioning wireless adapter can be disabled. Additionally, the CPU processor **13** can then send a message to the system management portion of the host network via the infrastructure **26** that it has a defective wireless adapter and repairs are needed.

Referring again to the configuration in which each of the wireless adapters is listening on the same channel, another advantage achieved by this configuration is the ability to receive two concurrent messages. In an access point that only contains one adapter, this situation will cause a collision and neither message will be received. In a high reliability access point built in accordance with the present invention, it is possible that the one wireless adapter will be able to receive one of the messages while the other wireless adapter receives the other, due to multipath fading at each of the wireless adapter antennas.

Referring now to FIG. **3**, a portion of a distribution network **30** utilizing high reliability access points is shown. The distribution network **30** includes an infrastructure **33** and two high reliability access points **35** and **36**. Access point **35** includes a CPU processor **37** and two wireless adapters **38** and **39**. Access point **36** includes a CPU processor **41** and two wireless adapters **42** and **43**. In the present example, a break **45** in the infrastructure **33** has occurred. Access point **35** is upstream to the break with respect to the host computer network and thus is not immediately affected by the break **45**. However, access point **36** is downstream to the break **45** and therefore is no longer connected to the host computer network.

When a situation like this occurs, the downstream access point **36** will begin attempting to communicate with an upstream access point using wireless communication. In this example, the upstream access point is access point **35**. However, the communication need not be with the access point immediately upstream, the only requirement is that it be with an access point which is upstream with respect to the break. The host computer network or other access points will previously have shared the logistic and address information concerning all of the access points to each access point in the distribution network.

Once communications with an upstream access point **35** is established, each access point **35** and **36** will dedicate one of its wireless adapters **39** and **42**, respectively to provide a wireless repair of the break **45** in the infrastructure **33**. When this happens, the CPU processor for each of the access points will instruct the dedicated wireless adapter to change so that it is no longer operating on the same channel as the other adapter in the access point. A communication channel between access points is established. The dedicated wireless adapters **39** and **42** will no longer be used to transmit or receive information to or from roaming computer devices. However, the non-dedicated wireless adapters **38** and **43** will communicate with the roaming computer devices. Once the top priority of re-establishing communications between all of the access points in the distribution network **30** and the host computer network has been accomplished, the access points can then send a message to the system management portion of the host computer network detailing where the break (or breaks) exists.

It is conceivable that the distribution network could lose its entire infrastructure. In this case, each of the high reliability access points would dedicate one of its wireless adapters to network infrastructure communications while retaining one of its wireless adapters for communication with roaming computer devices. Using the same technique described above, a temporary or remote access point could be established that, intentionally, is not connected to the infrastructure. This configuration is discussed below in greater detail with reference to FIG. **5**. The use of directional gain antennas for the dedicated wireless adapter would allow the temporary or remote access point to be positioned a considerable distance from the infrastructure.

Referring now to FIG. **4**, a high reliability access point **50** with a backup power supply **52** is shown. Typically, the access point will be wired to an external power source **54** such as a wall outlet. However, there is a great desire that if power is lost that the distribution network not shut down since the roaming computer devices will normally not be dependent upon the external power source **54**. In this embodiment of the present invention, the back-up power source **52** is wired in parallel with respect to the external power source **54**. Thus, if the external power source **54** fails, the access point **50** will not lose power.

Referring now to FIG. **5**, a remote access point **70** is shown connecting to the infrastructure **33** by means of dedicated wireless adapters **62** and **72**. The access point **70** is not hard wired to the infrastructure **33**. Therefore, the access point dedicates one of its wireless adapters **72** to network infrastructure communication. The other wireless adapter **74** continues to communicate with roaming computer devices within the range of the access point **70**. An access point **60** that is hard wired into the infrastructure **33** dedicates one of its wireless adapters **62** to network infrastructure communication and establishes a link between the infrastructure **33** and the remote access point **70**. The access point **60** can continue to service the roaming computer devices within its range through the wireless adapter **64**.

The hard wired access point **60** that is used to connect the remote access point **70** to the infrastructure need not be the access point that is physically closest to the remote access point **70**. Use of the directional antenna would allow a remote access point to establish communication with virtually any of the access points that are hard wired to the infrastructure. Additionally, several remote access points could establish wireless infrastructure communication by each dedicating one of their wireless adapters. In this arrangement, only one of the remote access points need be in communication with a wired access point. All other remote access points could establish communication with the host computer network via the remote access point in communication with a wired access point.

FIG. **6** is block diagram illustrating an embodiment of an access point **600** built in accordance with the present invention capable of communicating with wireless devices in its cell on both a first channel and a second channel. The access point **600** thus includes a first radio **616** operating on a first channel and a second radio **608** operating on a second channel. The access point also includes a processing unit **612** and additional circuitry **614**, both of which couple to the first radio **616**, the second radio **608** and a wired Ethernet transceiver through a bus interface **610**. The wired transceiver **606** allows the access point **600** to access a wired LAN backbone **622** to which various other system components may connect. The wired LAN backbone may include, for example, an ethernet network, a token-ring network or an asynchronous transfer mode (ATM) network among other network types. In any such case, the wired transceiver **606** facilitates communication between the access point **600** and devices coupled to the wired LAN backbone **622**.

The blocks illustrated in FIG. **6** are simplified for exemplary purposes, and it will be understood by one skilled in the art that an access point **600** according to the present invention is not limited to the block circuitry shown in FIG. **6**. In another embodiment, the access point **600** may contain additional transceivers for communicating on other channels, over other mediums and in other networks as well.

The first channel radio **616** couples to first antenna **618** while the second channel radio **608** couples to second antenna **620**. The antennas **618** and **620** may either be

protruding or non-protruding antennas, depending upon system requirements. The first channel radio **616** and the second channel radio **608** operate independently to form a first communication cell and a second communication cell, respectively. When a radius of the first communication cell substantially equals a radius of the second communication cell, the cells substantially overlay one another. However, when the radii of the communication cells differ, the larger cell fully overlays and extends beyond the smaller cell. The first and second channels may operate using different frequencies, modulation schemes and code spreading schemes. The selections of such operational channel variations depend on overall system constraints, yet should result in two independent channels that do not interfere with one another unacceptably.

The bus interface **610** isolates the processing unit **612** and the additional circuitry **614** of the access point **600** from the operating characteristics of the radios **616** and **608** and the wired transceiver **606**. Thus, communication with any of the transceivers can be accommodated by general circuitry and software routines of the access point **600**. In one embodiment, the bus interface **610** is a PCI bus interface with the first channel radio **616**, second channel radio **606** and wired transceiver compatible with PCI bus standards. However, in other embodiments, differing interface standards may be employed.

In operation, the processing unit **612** is programmed with the network configuration to route communications through the first channel radio **616**, the second channel radio **608** and the wired transceiver **606**. However, roaming portable units may alter the network configuration as they move between cells. Thus, the access point **600** periodically polls devices within its communication cell to update the network configuration. Updates are entered and forwarded for other units in the system.

Incoming messages received via the wired transceiver **606** may be stored, displayed and routed via the first channel radio **616** or routed via the second channel radio **608** to portable data terminals or other wireless devices operating within the cell(s) of one or more of the access point **600**. Similarly, an incoming message on one of the radios **616** or **608** may be stored, displayed, routed through one of the radios **616** or **608** or routed through the wired transceiver **606**, depending upon the message destination and type.

By providing routing within the access point **600** between the first channel radio **616** and the second channel radio **608**, message delivery is expedited. Further, as will be described herein, by providing two radios in various access points, fewer cells may be required to adequately service a premises such as a factory. Moreover, when one of the radios is employed to provide control within a cell while the other radio provides primary communication within the cell, collisions between devices may be eliminated. Still further, when one of the radios provides a deterministic communication path while another one of the radios provides a non-deterministic communication path, data and message transmissions within the network may be controlled to satisfy bandwidth requirements of the various devices within the system. It may be preferable to utilize a deterministic communication path for some types of communications such as telephony video or real-time data transfer, for example. However, when the preferred deterministic path is unavailable for some reason, the alternative non-deterministic path may still be used.

The access point **600** may synchronize transmissions on the first channel radio **616** and the second channel radio **608** to avoid unacceptable conflicts between transmissions on one radio and receipts on the other radio. In this fashion, unacceptable conflicts are minimized.

FIG. 7*a* is a block diagram illustrating an embodiment of a portable data terminal **720** according to the present invention, the portable data terminal having a single PCMCIA card that contains two radios. In particular, the portable data terminal **720** contains terminal circuitry **722** that includes processing circuitry **726**, conventional terminal circuitry **728** and interface circuitry **730**. The interface circuitry **730** provides a PCMCIA interface for receiving PCMCIA cards of various functionality. Terminal circuitry **722** is well known and can be found in conventional portable or hand held computing devices.

Via the interface circuitry **730**, the portable data terminal **720** accepts PCMCIA cards. As illustrated, the PCMCIA card inserted constitutes a communication module **724** that provides wireless access on two channels. Specifically, the communication module **724** comprises processing circuitry **732**, first channel radio **735**, second channel radio **734** and interface circuitry **744**. The first channel radio **735** communicates via first antenna **737** while the second channel radio **734** communicates via second antenna **738**. Configured and operable in this manner, the portable data terminal **720** may communicate with the access point **600** of FIG. **6** on either the first channel or the second channel.

Independent of whether the first channel radio **735** or the second channel radio **734** is used, the processing circuitry **726** delivers and receives data and messages via the interface circuitry **730** in the same manner and format, i.e., the interface circuitry **730** supports a common communication interface and protocol. The processing circuitry **732** of the communication module **724** receives data and messages via the interface circuitry **744**. The processing circuitry **732**, including a DSP **742**, participates to assist in wireless communication via both the first channel radio **735** and the second channel radio **734**. Thus, the module **724** not only saves on PCMCIA slots, but also saves costs and increases reliability by sharing common circuitry resources. In particular, the first channel radio **735** and second channel radio **734** share the interface circuitry **744** and processing circuitry **732** which includes the DSP **742**. In another embodiment of the portable data terminal **720**, a PCMCIA compatible wired network adapter could be installed which would also share some of the common circuitry resources.

FIG. 7*b* is a block diagram illustrating an alternative embodiment of a portable data terminal **748** that receives a single PCMCIA card having a radio **750** that includes two separate radio units. As contrasted to the dual radio design of the portable data terminal **720** of FIG. 7*a*, the radio **750** of the portable data terminal **748** of FIG. 7*b* operates on both the first channel and the second channel. The radio **750** is coupled to antenna **756** and controlled by processing circuitry **752** that includes digital signal processing circuitry **754**. The radio **750** includes a first radio unit operable on the first channel and a second radio unit operable on the second channel with the radio units sharing some common components.

The processing circuitry **752** may control operation of the radio **750** in a simplex fashion such that the radio **750** operates on the first channel as required and operates on the second channel as required. Because the radio **750** may includes circuitry shared by the radio units, the radio **750** may only operate on one channel at a given time. By multiplexing its operation over time, however, the radio **750** provides sufficient coverage on the channels at a reduced cost. Other components of the portable data terminal of FIG.

7b were previously described with reference to FIG. 7a and will not be further described herein.

FIG. 8 is a block diagram illustrating an alternative embodiment of a portable data terminal 800 according to the present invention, the portable data terminal 800 having a single PCMCIA card that contains a multi-channel (or multi-mode) wireless transceiver 739 and a wired network interface 736 (or modem transceiver). The portable terminal 800 includes terminal circuitry 722 and a module 802 including various components previously described with reference to FIG. 7a. The terminal circuitry 722 includes processing circuitry 726, conventional terminal circuitry 728 and interface circuitry 730. The communication module 802 includes processing circuitry 732, the multi-mode wireless transceiver 739, the wired modem transceiver 736 and interface circuitry 744. When in use, the wired modem transceiver 736 interfaces via a jack 740 to a telephone line (not shown). Similarly, the wireless multi-mode transceiver 739 communicates via an antenna 741.

The processing circuitry 732 of the communication module 802 receives data and messages via the interface circuitry 744. If the modem transceiver 736 is being used, the processing circuitry 732 appropriately (de)segments and (de)compresses the data/messages utilizing a digital signal processor (DSP) 742. Otherwise, the processing circuitry 732, including the DSP 742, participate to assist in wireless communication via the multi-mode transceiver 739. Thus, the module 802 not only saves on PCMCIA slots (as required when a conventional radio card and a conventional modem card are both being used), but also saves costs and increases reliability by sharing common circuitry resources.

The multi-mode transceiver 739 is frequency nimble and may operate in various modes, such as those that may be used with a frequency spreading scheme such as those described in U.S. Pat. No. 5,425,051 issued Jun. 13, 1995 to Ronald L. Mahany, which is incorporated herein by reference. Thus, the multi-mode transceiver 739 may operate on both the first channel and the second channel and communicate with the access point 600 of FIG. 6 on either the first channel or the second channel. As will be further described herein, operation on differing channels may be employed to reduce installed system component requirements, to alleviate various potential interfering operating conditions and to more efficiently route data and messages within the wireless local area network.

FIG. 9 is a diagram illustrating a communication system 900 built and operating according to the present invention. The communication system includes an access point 902 operating on two channels and access points 904 and 906 operating on a single channel. Each of the access points 902, 904 and 906 connects to a wired LAN backbone 908 to facilitate wired communication between the access points and computer systems 910 and 912 connected to the wired LAN backbone 908.

Access point 902 includes both a first channel radio and a second channel radio. In the embodiment illustrated, the first channel radio creates a first channel cell 930 extending with a first channel radius about the access point 902. The second channel radio of the access point 900 creates a second channel cell 932 extending with a second channel radius about the access point 902. As illustrated, the second channel cell 932 has a larger radius than the radius of the first channel cell 930. To create the relatively larger cell, the second radio may operate at a higher power, operate at a lower data rate or operate in another differing manner to create the relatively larger cell.

Access points 904 and 906 generate first channel cells 934 and 936, respectively. Portable data terminals 920, 922, 924 and 926 and scanning unit 918 communicate with the various access points 902, 904 and 906 and roam about the communication system 900, potentially moving from cell to cell. Other devices, such as stationary printers 914 and 916 typically remain within one cell of the communication system 900. In the embodiment illustrated, portable data terminals 920 and 926 include multi-mode radios while portable data terminals 922 and 924 include both a first channel radio and a second channel radio. However, in other embodiments, some of the portable data terminals may only on one of the channels.

As illustrated, terminal 922 includes a first channel antenna 940 and a second channel antenna 942 while access point 902 includes both a first channel antenna 944 and a second channel antenna 946. Thus, whenever the terminal 922 roams within the second channel cell 932, the terminal 922 communicates via a second channel radio and second channel antenna 942. Further, terminal 950 may communicate with access point 902 on the first channel via its first channel antenna 954 when resident within the first channel cell 903. Finally, terminal 952, having a single radio operable the first channel via antenna 956 may communicate with access point 902 on the first channel when resident within the first channel cell 932.

As shown, portable data terminal 922 resides both within the first channel cell 930 and the channel cell 932 generated by access point 902. Thus, the portable data terminal 922 may communicate with access point 902 on either the first channel or the second channel. However, printer 916 and scanning unit 918 reside only within the second channel cell 932 generated by access point 902 and must communicate with the access point 902 on the second channel.

Print data originating at computer 910 and intended for printer 916 travels from computer 910, through the wired LAN backbone 908 to access point 902 and across first channel cell 932 to the printer 916. During this transmission, the data is routed through the wired LAN backbone and the wireless network based upon the network locations of the computer 910 and the printer 916. The combination of these segments forms a unique network path. However, a message moving from portable data terminal 926 to portable data terminal 922 may be routed along two different network paths. While both network paths include access point 906, wired LAN backbone 908 and access point 902, one network path includes first channel cell 930 while the other network path includes second channel cell 932. Thus, depending upon system conditions and the system configuration, the message is routed via one of the two network paths. Such conditions may include cell traffic, required data rates and other factors.

FIG. 10 is a diagram illustrating a communication system 1000 built and operating according to the present invention wherein one of the access points routes communication between two portable terminal units operating on different channels within its cell. In the communication system 1000, both a first access point 1002 and a second access point 1004 include both first and second channel radios. The first access point 1002 generates a first channel cell 1006 and a second channel cell 1008 within which portable data terminals 1012 and 1014 operate. Further, second access point 1004 generates a first channel cell 1010 and a second channel cell 1011 within which portable data terminals 1012 and 1014 may operate. In the embodiment, the system 1000 prefers to

route communication on the first channel due to its characteristics although the portable data terminals may operate on either channel.

As illustrated, portable data terminal **1012** resides within both the first channel cell **1006** and the second channel cell **1008** generated by access point **1002**. However, portable data terminal **1014** resides only within the second channel cell **1008** of the access point **1002**. Thus, in the transmission of a message from portable data terminal **1012** to portable data terminal **1014**, access point **1002** receives the message from portable data terminal on the first channel radio and transmits the message to portable data terminal **1014** on the second channel. With reference to FIG. **6**, the processing unit **612** receives the message via the first channel radio **616** across the bus interface **610**. The processing unit **612** determines the destination of the message, and routes the message back across the bus interface **610** to the second channel radio **608** that transmits the message to portable data terminal **1014**. Access point **1004** also provides multiple is channel routing of messages between portable data terminals **1016** and **1018**.

Without the multiple channel communication capabilities of the communication system **1000**, an additional access point **1020** having a first channel cell **1022** would be required to facilitate communication with portable data terminals **1014** and **1018**. The cost of such an additional access point **1020** would not only include the cost of the access point **1020** itself but the expense of connecting the access point **1020** to the wired LAN backbone **908** and AC power. The cost of such addition would far exceed the cost of the second channel radios in access points **1002** and **1004**. Furthermore, in some installation, extensions of the wired LAN backbone **908** are not possible. Even if such access point **1020** were installed, the exemplary communication would require routing of messages between portable data terminal **1012** and **1014** across the wired LAN backbone **908**. Such additional loading slows operation of the wired LAN backbone **908** and decreases system performance.

FIG. **11** is a block diagram illustrating an embodiment of a communication system **1100** according to the present invention wherein an access point **1102** uses a dedicated control/busy channel transmitter **1114** operating on a busy/control channel to manage transmissions between the access point **1100** and a plurality of roaming portable data terminals **1104** and **1106** within its cell. The communication system may also contain wired communication to a wired Ethernet backbone LAN **908**.

The access device **1102** includes control circuitry **1120**, a data transceiver **1118**, a busy/control transmitter **1114** and antennas **1115** and **1117**. The data transceiver **1117** supports communication on a communication channel (first channel) between the access point **1102** and wireless network devices operating within range of the access point, such as the portable data terminals **1104** and **1106**. Further, the busy/control transmitter **1114** supports transmissions on the busy/control channel (second channel). The Ethernet transceiver **1115** supports communication between the backbone LAN **908** and the control circuitry **1120**.

Portable data terminals **1104** and **1106** include terminal circuitry **1112**, a data transceiver **1108** that communicates on the communication channel via antenna **1109** and a busy/control receiver **1110** that receives busy/control information via antenna **1111**. As previously described, the communication channel and the busy/control channel are non-convergent and may operate concurrently in a single area or location. However, the access point **1102** must operate so as not to interfere with incoming transmissions by concurrently initiating a transmission. Thus, in one embodiment, transmissions on the communication channel and the control/busy channel are synchronized to prevent such conflicts.

The access point **1102** employs the busy/control transmitter **1114** to control operations within the first wireless network cell. In one embodiment, the access point **1102** periodically transmits control parameters that the portable data terminals **1104** and **1106** use to synchronize with communications on the communication channel. For example, with the data transceiver of the communication channel operating in a spread spectrum mode, the busy/control transmitter **1114** transmits code spreading sequences, frequency hopping parameters and other operating parameters that allow the portable data terminals **1104** and **1106** to communicate within the cell on the communication channel. Such control information may be intermittently transmitted by the access point **1102** or may be continuously transmitted.

Additionally, the access point **1102** transmits a busy signal on the busy/control transmitter **1114** to authorize communication within the cell. To prevent portable data terminal **1104**, for example, from transmitting while portable data terminal **1106** is communicating with the access point **1102**, the access point **1102** transmits a busy signal on the busy/control channel using the busy/control transmitter **1114**. The portable data terminal **1104** receives the busy signal and does not transmit information while such busy signal is active, perhaps entering a sleep mode instead and waking up periodically to determine availability. The busy signal may include a continuous transmission or periodic transmission. However, in both embodiments, portable data terminals **1104** and **1106** listen with their respective control/busy receivers **1110** prior to initiating communication with the access point **1102**. Thus, upon roaming into range of the wireless access device **1102**, the portable data terminals **1104** do not interfere with ongoing communication.

FIG. **12** is a drawing illustrating advantageous operation of the access device and portable data terminals of FIG. **11** when two roaming terminals encounter hidden terminal conditions. In particular, each of the portable data terminals **1208** and **1212** is configured to listen on the busy/control channel and to communicate on the communication channel only when the communication channel is clear (available). In this configuration, when no desire to communicate is present, the portable data terminals **1208** and **1212** need only occasionally check the busy/control channel to identify any outstanding messages or communication requests as transmitted by the access device **1202**. If either portable data terminal **1208** or **1212** desires to participate on the communication channel (to initiate communication or to respond to awaiting messages or communication requests), that terminal need only monitor the busy/control channel long enough to identify that the communication channel is clear before responding to a poll on the communication channel. As before, the wireless access device **1202** may also periodically identify the communication channel mode and associated parameters as selected and reselected by the wireless access device **1202**.

To fully appreciate this process, first assume that the portable data terminals **1208** and **1212** are not within range of the wireless access device **1202**. Upon wandering within range of the access device **1202**, the portable data terminal **1212** begins listening for transmissions on a busy/control channel. Within some time period thereafter, the access device **1202** participates on the busy/control channel to transmit current channel conditions and optionally, the currently selected communication channel definition (i.e., mode and parameters) and/or pending message and communica-

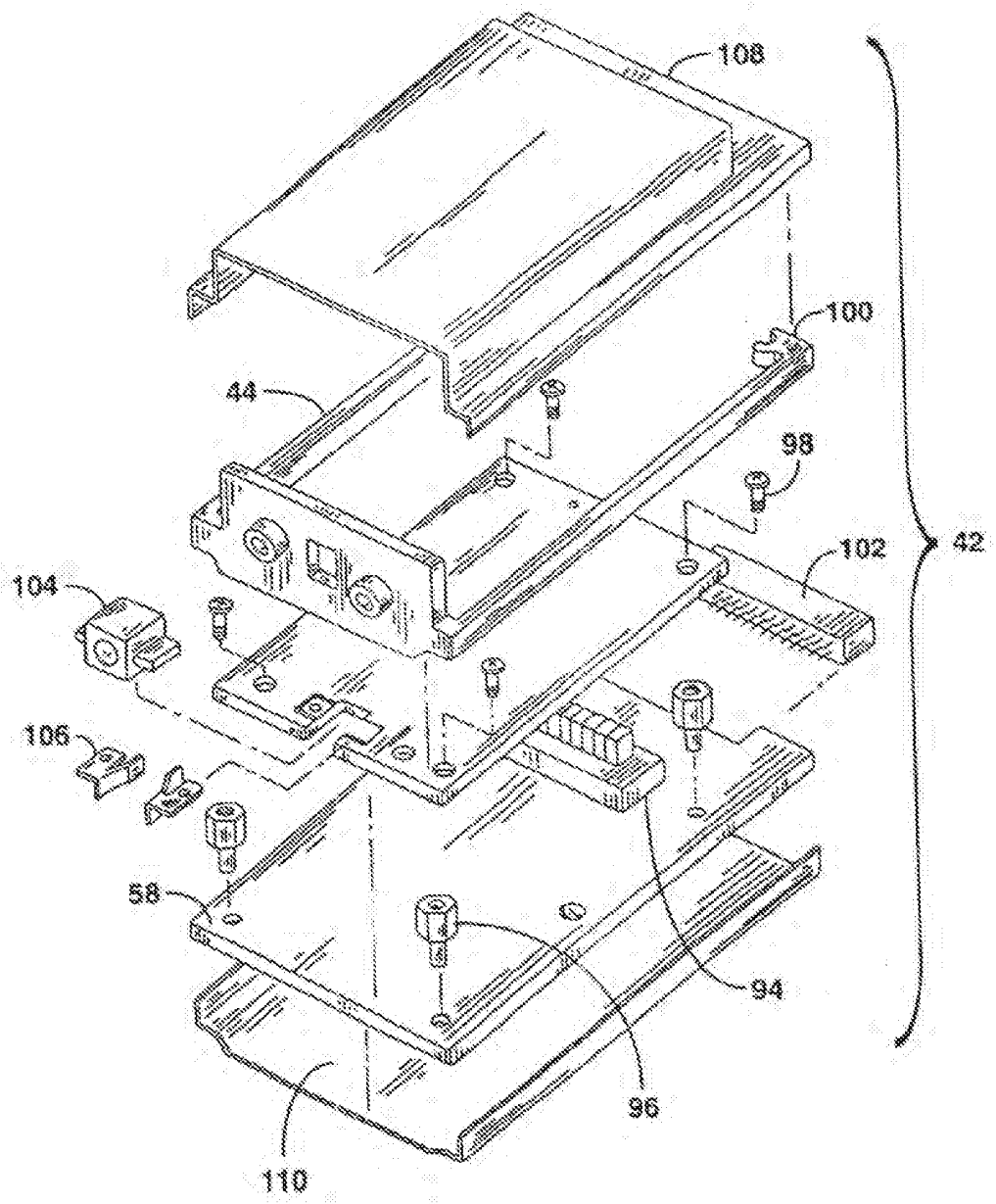

FIG. 9

tion request indicators. After identifying a need to participate, the portable data terminal **1212** awaits a transmission from access device **1202** (on the busy/control channel) that the selected communication channel is clear (not in use). When the channel is clear, the portable data terminal **1212** begins participating thereon.

Second, assume that, while the portable data terminal **1212** is engaged in ongoing communication with a computing device **1206** on a backbone LAN **908** via the access device **1202**, the portable data terminal **1208** comes within range of the access device **1202** and desires to participate on the communication channel. The portable data terminal **1208** adapts itself to participate on the busy/control channel and identifies, in periodic transmissions from the access device **1202**, that the communication channel is busy. Thus, the portable data terminal **1208** must monitor the busy/control channel to identify when the communication channel is clear before participating on the communication channel.

This operation works whether or not the portable data terminals **1208** and **1212** are within range of each other. In particular, portable data terminal **1208**, portable data terminal **1212** and access device **1202** have transmission ranges illustrated by dashed circles **1210**, **1214** and **1204**, respectively. Although both portable data terminals **1208** and **1212** are within range of the access device **1202**, neither are in range of each other and, thus, are referred to as "hidden" from each other. The access device **1202** is within range of both of the portable data terminals **1208** and **1212**. If the portable data terminal **1208** attempted to transmit on the communication channel while the portable data terminal **1212** was transmitting, a collision would occur at the wireless access device **1202**. However, this is not the case because both of the portable data terminals **1208** and **1212** must receive a communication channel clear indication on the busy/control channel from the access device **1202** that is in range of both, avoiding the hidden terminal problem. When participation is completed on the communication channel, the portable data terminals **1208** and **1212** resume monitoring of the busy/control channel.

Participation by the access device **1202** on the busy/control channel need only be by transmitting, although receiving might also be employed in case the busy/control channel is to be shared. Similarly, participation by the portable data terminals **1208** and **1212** need only be by receiving transmissions, although transmitting might also be employed. In particular, transmission might be employed by a wireless terminal on the busy/control channel if the wireless terminal does not support the currently selected communication channel, i.e., does not support the mode and associated parameters.

FIG. **13** is a block diagram illustrating an alternate embodiment of the communication system **1300** of the present invention wherein an access point **1302** includes a dedicated control/busy channel transceiver **1310** and roaming data terminals **1304** communicate with the access point **1302** using either frequency nimble multi-channel transceivers **1305** or a dedicated control/busy channel transceiver **1326**. Thus, the communication system **1300** facilitates bi-directional communication on the busy/control channel so that the access point **1302** may optimize operation of the system **1300**.

In addition to the busy/control transceiver **1310** coupled to antenna **1314**, the access point includes control circuitry **1306**, a data transceiver **1312** coupled to antenna **1316** that facilitates wireless communication on the communication channel and an Ethernet transceiver **1308** that couples the access point **1302** to the backbone LAN **908**. Portable data terminal **1304** includes terminal circuitry **1112** and a multi-mode/multi-channel transceiver **1305** that allows the portable data terminal **1304** to communicate both on the busy/control channel and the communication channel. Portable data terminal **1320** includes terminal circuitry **1322**, a busy/control transceiver **1324** coupled to antenna **1330** that allows the portable data terminal **1320** to communicate on the busy/control channel and a data transceiver **1326** coupled to antenna **1328** that allows the portable data terminal to communicate on the communication channel.

Having separate radio units and antennas, the access device **1302** participates on: 1) a selected communication channel, servicing data exchanges in the communication network cell; and 2) the busy/control channel defined by predeterminal mode and parameter information known to all wireless transmitters, controlling access to the selected communication channel. Such participation is often simultaneous, preventing a portable data terminal **1304** or **1320** from having to wait long on the busy/control channel for a transmission. Within a predefined maximum time period, the portable data terminal **1304** or **1320** receives transmissions from the access device **1302** identifying currently selected communication channel mode and associated parameters, should such be required. The access device **1302** periodically broadcasts such information on the busy/control channel to capture terminals that happen to need communication channel definitions (e.g., selected mode and parameters) to participate. The portable data terminal **1304** utilizes the identified mode and associated parameter information to switch the multi-mode transceiver **1305** over to the selected communication channel and begins participation thereon. Portable data terminal **1320** may also alter the operation of the data transceiver **1326** based upon the receipt from the access point **1302**.

In operation, the wireless terminal **1304** participates on the busy/control channel except when it has a need to gain access to the selected communication channel. Thus, its operation in the system **1300** is satisfactory. By including only the terminal circuitry **1112** and one radio, the portable data terminal is less costly than the multi-radio portable data terminal **1320**. However, because the wireless terminal **1320** includes two radios, the portable data terminal **1320** may place the data transceiver **1326** in a low power state, and only power up the busy/control channel transceiver **1324** to check in. Thus, portable data terminal **1320** may consume less power that portable data terminal **1304**.

FIG. **14***a* is a block diagram illustrating a communication system **1400** according to the present invention wherein an access point **1402** and portable data terminals **1404** and **1406** operate on a deterministic first channel and a non-deterministic second channel and the system **1400** routes communications on the channels based upon system conditions and/or the requirements of a particular communication. To carry out such functionality, the access device **1402** may comprise control circuitry **1408**, a wired LAN transceiver **1410** and either a single, configurable transceiver (for operating on both the deterministic and non-deterministic channels, not shown) or a single transceiver **1412** coupled to antenna **1413** for operating on the deterministic channel and a single transceiver **1414** coupled to antenna **1415** for operating on the non-deterministic channel.

In one embodiment, the deterministic channel allocates a particular communication bandwidth to each wireless device requiring communication, perhaps in a polled, token passing or time slotted implementation. Such operation may be required where many wireless devices reside within a single cell and compete for communication with the access point

1402. In the embodiment, the access point 1402 also allows all devices within the cell to compete for available bandwidth on the non-deterministic channel. However, the access point 1402 may provide overrides to dynamically reallocate bandwidth in the deterministic channel and to assign bandwidth on the non-deterministic channel as may be required for the particular operating conditions.

With a single multi-mode transceiver 1418 coupled to antenna 1419 controlled by terminal circuitry 1416, the portable data terminal 1404 operates on either the deterministic channel or the non-deterministic channel at any time. Alternatively, portable data terminal 1406 having terminal circuitry 1420, a deterministic transceiver coupled to antenna 1425 and a non-deterministic transceiver 1422 coupled to antenna 1423 communicate on both the deterministic channel and non-deterministic channel simultaneously.

Independent of their differing constructions, the portable data terminals 1404 and 1406 may determine which channel to operate upon. During data transfer operations wherein data transfer rates are not critical, portable data terminal 1404 may determine that the deterministic channel provides sufficient bandwidth. In that case, the portable data terminal 1404 configures its multi-mode transceiver 1418 to operate on the deterministic channel. However, during voice message transfer operations, the portable data terminal 1404 may determine that the bandwidth of the deterministic channel is not satisfactory. In that case, the terminal circuitry 1404 would configure the multi-mode transceiver 1418 to operate on the non-deterministic channel.

FIG. 14b is a diagram illustrating a communication system 1450 according to the present invention that facilitates both wired and wireless communications. The communication system 1450 includes a wired backbone 1452 and at least one access point 1456 that supports communication over a deterministic, time bounded first wireless channel and a non-deterministic, contention access second wireless channel. Along with the access point 1456, the communication system 1450 may also include a PBX (Private Broadcast Exchange) system 1454, one or more of a computer 1454, and other typical wired network devices interconnected by the wired backbone 1452. Additionally, the communication system 1450 comprises a plurality of wireless network devices, such as wireless terminals 1470, 1472 and 1474, which may be portable hand-held devices, mobile computing devices, laptop computers, wireless peripherals, etc.

Communication upon the wired backbone 1452 may be accomplished according to various communication techniques. In one embodiment, communication upon the wired backbone 1452 occurs via an STM (Synchronous Transfer Mode) protocol wherein the wired backbone 1452 serves as an STM backbone. With the STM protocol, a particular bandwidth is provided for each communication link established between a sending and a receiving device attached to the wired backbone 1452.

In another embodiment, communication upon the wired backbone 1452 is carried out using an ATM (Asynchronous Transfer Mode) protocol in which bandwidth between a sending and a receiving device on the wired backbone 1452 is adjusted based upon immediate communication requirements. In such operation, the wired backbone 1452 serves as an ATM backbone. Operation according to the ATM protocol allows for variations in data transmission bandwidths as is immediately required but that provides an average bandwidth over time.

The at least one access point 1456 provides a link between the wireless and wired communications within the communication system 1450. The access point 1456 includes a time bounded adapter 1458 connected to an antenna 1460 which provides wireless communication on the deterministic, time bounded first wireless channel governed by a first wireless protocol. The access point 1456 also includes a contention adapter 1462 connected to an antenna 1464 which provides wireless communications on the non-deterministic, contention access second wireless channel governed by a second wireless protocol. Alternatively, part or all of the circuitry underlying the adapters 1458 and 1462 may be combined into a single unit to share common underlying functionality.

The wireless network device 1470 includes either a dual purpose transceiver or two transceivers for communicating on the first and second wireless channels via the first and second wireless protocols, respectively. A transceiver in the wireless network device 1472 only supports communication on the second wireless channel pursuant to the second wireless protocol. Likewise, a transceiver in the wireless network device 1474 supports communication on the first wireless channel pursuant to the first wireless protocol. For example, the wireless network device 1474 might comprise a portable phone unit operating using, e.g., PCS (Personal Communication Service) or other telephony protocol as the first wireless protocol.

Although direct communication is possible, to manage the first wireless channel, the at least one access point 1456 relays wireless communication between the wireless network devices 1470 and 1474 if both participate on the first wireless channel. If the at least one access point 1456 is the only access point involved that services the two devices 1470 and 1474, such relaying need not involve the wired protocol on the backbone 1452. If the device 1470 happens to communicate via the second wireless channel, the access point 1456 internally translates and relays communications between the devices 1470 and 1474. Similarly, if the device 1470 intends to communicate with a wired network device using either the first or second wireless protocol, the access point 1456 utilizes the first or second wireless protocols, respectively, to communicate with the device 1470. The access point 1456 also communicates with the target wired network device, e.g., the computer 1454, via the wired communication protocol. Relaying between the wired and wireless channels also requires translation.

If more than one access point is coupled to the wired backbone 1452, for example, to support many more wireless network devices, roaming wireless network devices and/or extended coverage regions, the access points only utilize wired backbone bandwidth if necessary. Each access point attempts to minimize external bandwidth (of wired and wireless channels) by preferring internally performed relaying and, when needed, translation (between the first and second wireless protocols, or between the wired protocol and either the first or the second wireless protocol).

The PBX system 1454 connects the wired backbone 1452 through a switched telephone network to other communication systems such as the system 1452. This facilitates communications between all wireless and wired network devices, such as the computer 1454, the device 1470 and remote network devices (devices) connected elsewhere to the switched telephone network. In circuit switched applications, a VLAN (virtual local area network) can be established between wired and wireless network devices coupled to the wired backbone 1452. Such coupling also includes remote network devices coupled via the PBX system 1454.

FIG. 15 is a diagram illustrating the access point 1402 and portable data terminals 1404 and 1406 of FIG. 14a wherein a system 1500 routes various transmissions according to

system conditions such as channel activity, data type and data priority. In the system **1500**, access point **1402** forms cell **1512** while access point **1504**, operating on only a single channel, forms cell **1514**. Thus, while access point **1402** must determine how to allocate wireless communications among the deterministic channel and non-deterministic channel in its cell **1512**, access point **1504** routes all communications on its only channel.

In a first example of the operation of the system **1500**, data from computer system **1502** is transmitted to portable data terminal **1406**. The computer system **1502** transmits the data through the wired LAN backbone **908** to the access point **1402**. The access point **1402**, having a deterministic transceiver **1412** and a non-deterministic transceiver **1414**, routes the data through one of the transceivers. Based upon the type of data, the quantity of data, the rate at which data may be passed on either channel, the amount of traffic on the channels and other conditions, the control circuitry **1408** in the access point **1402** routes the data on either the non-deterministic channel via the non-deterministic transceiver **1414** or on the deterministic channel via the deterministic transceiver **1412**. In the present example, the data to be transferred has a relatively low priority and the access point routes the data on the deterministic channel to the portable data terminal **1404**. Likewise, print jobs from the computer **1402** to the printer **1510** would also have relatively low priority and be transmitted via the non-deterministic channel.

Next, consider data transmissions from scanner **1508** to computer system **1502**. During operation, the scanner transmits an image to the computer system **1502** for decoding and the computer system **1502** returns decoded information at which point the scanner ceases scanning. Rapid transmission between the scanner **1508** and the computer system **1502** reduces the time within which the scanner **1508** performs scans. Thus, rapid transmissions may reduce energy consumption in the scanning process that drains battery life of the scanner **1508**. Thus, the scanner **1508** and access point **1402** both attempt to transmit data on the non-deterministic channel at a relatively higher data transfer rate. However, if the non-deterministic channel is unavailable, the transmission on the deterministic channel may be satisfactory.

In the case of a voice message transmission from portable data terminal **1506** in cell **1514** to portable data terminal **1404** in cell **1512**, transmission on the deterministic channel may be unsatisfactory. Thus, upon an incoming voice message transmission, the access point **1402** may reallocate the deterministic channel allocating additional bandwidth for the voice message. In an alternative operation, the access point **1402** may interrupt communication on the non-deterministic channel and transmit the voice message to the portable terminal unit **1404** on the non-deterministic channel. Thus, in the mode of operation of the system **1500** modifies its operation to provide sufficient bandwidth for the voice message.

In view of the above detailed description of the present invention and associated drawings, other modifications and variations will now become apparent to those skilled in the art. It should also be apparent that such other modifications and variations may be effected without departing from the spirit and scope of the present invention as set forth in the claims that follow.

What is claimed is:

1. An access point for communicatively coupling a first roaming wireless device and a second roaming wireless device to a wired link, the access point comprising:

a control circuit;

a wired transceiver that is communicatively coupled to the control circuit and that communicatively couples to the wired link;

a first wireless transceiver that is communicatively coupled to the control circuit, the first wireless transceiver operating on a first wireless communication channel to communicatively couple with the first roaming wireless device;

a second wireless transceiver that is communicatively coupled to the control circuit, the second wireless transceiver operating on a second wireless communication channel to communicatively couple with the second roaming device; and

the control circuit accommodates communications between the first wireless transceiver and the second wireless transceiver.

2. The access point of claim **1**, further comprising a bus interface communicatively coupling the control circuit to the first and second wireless transceivers and the wired transceiver.

3. The access point of claim **2**, wherein the bus interface is substantially compliant with a bus standard.

4. The access point of claim **3**, wherein the bus standard is a PCI standard.

5. The access point of claim **1**, wherein the wired transceiver accommodates communication with an Ethernet network.

6. The access point of claim **1**, wherein the wired transceiver accommodates communication with a token-ring network.

7. The access point of claim **1**, wherein the wired transceiver accommodates communication with an asynchronous transfer mode network.

8. The access point of claim **1**, wherein the wired transceiver accommodates communication with a packetized network.

9. The access point of claim **1**, wherein the first wireless transceiver supports a substantially non-deterministic media access protocol and the second wireless transceiver supports a substantially deterministic media access protocol.

10. The access point of claim **1**, wherein the first wireless transceiver and the second wireless transceiver support substantially distinct non-deterministic media access protocols.

11. The access point of claim **1**, wherein the first wireless transceiver and the second wireless transceiver operate independently to form a first communication cell and a second communication cell.

12. The access point of claim **1**, wherein the control circuit synchronizes transmissions on the first wireless communication channel and the second wireless communication channel to minimize conflicts between transmissions on one wireless transceiver and receipts on the other wireless transceiver.

13. The access point of claim **1**, wherein the wired link is a local area network.

14. The access point of claim **1**, wherein the first wireless transceiver and the second wireless transceiver have substantially different operating characteristics.

15. A communication network comprising:

a wired LAN;

a plurality of access points coupled via the wired LAN, each of the plurality of access points comprising:

a control circuit;

a wired transceiver that is communicatively coupled to the control circuit and that communicatively couples to the wired LAN;

a first wireless transceiver that is communicatively coupled to the control circuit and operates on a first wireless communication channel;

a second wireless transceiver that is communicatively coupled to the control circuit and operates on a second wireless communication channel; and

the control circuit accommodates communications between the first wireless transceiver and the second wireless transceiver;

a first roaming wireless device comprising a third wireless transceiver that operates on the first wireless communication channel; and

a second roaming wireless device comprising a fourth wireless transceiver that operates on the second wireless communication channel.

16. The communication network of claim **15**, wherein the first roaming wire less device operates only on the first wireless communication channel.

17. The communication network of claim **15**, wherein the first roaming wireless device and the second roaming wireless device have different transmission characteristics.

18. The communication network of claim **15**, wherein the first roaming wireless device and the second roaming wireless device incorporate different data throughput capabilities.

19. The communication network of claim **15**, wherein the first roaming wireless device and the second roaming wireless device operate independently to form a first communication cell and a second communication cell, respectively.

20. The communication network of claim **19**, wherein the radius of the first communication cell substantially equals the radius of the second communication cell.

21. The communication network of claim **15**, wherein the wired transceiver accommodates communication with an Ethernet network.

22. The communication network of claim **15**, wherein the wired transceiver accommodates communication with a token-ring network.

23. The communication network of claim **15**, wherein the wired transceiver accommodates communication with an asynchronous transfer mode network.

24. The communication network of claim **15**, wherein the wired transceiver accommodates communication with a packetized network.

25. The communication network of claim **15**, wherein the first wireless transceiver supports a substantially non-deterministic media access protocol and the second wireless transceiver supports a substantially deterministic media access protocol.

26. The communication network of claim **15**, wherein the first wireless transceiver and the second wireless transceiver support substantially distinct non-deterministic media access protocols.

27. The communication network of claim **15**, wherein the third wireless transceiver is a PCMCIA card.

28. The communication network of claim **15**, wherein the first wireless communication channel is a radio frequency (RF) channel.

29. A communication system, comprising:

a plurality of access points, each of the plurality of access points comprising:

a control circuit;

a wired transceiver that communicatively couples the control circuit to a wired LAN;

a first wireless transceiver that is communicatively coupled to the control circuit, the first wireless transceiver operating pursuant to a substantially deterministic, time bounded wireless communication protocol; and

a second wireless transceiver that is communicatively coupled to the control circuit, the second wireless transceiver operating pursuant to a substantially non-deterministic contention access wireless communication protocol; and

a plurality of roaming wireless devices that each wirelessly communicate with at least one of the first and second wireless transceivers.

30. An access point for establishing communications with a wired link, the access point comprising:

a PCMCIA interface adapted to modularly receive a plurality of wireless transceivers for operating on independent wireless communication channels;

a wired transceiver operable on the wired link;

interface circuitry operable to communicate with wireless transceivers modularly received via the PCMCIA interface and with the wired transceiver; and

processing circuitry coupled to the interface circuitry to control communications by the wireless transceivers modularly received via the PCMCIA interface and by the wired transceiver.

31. The access point of claim **30**, wherein the interface circuitry comprises a PCI bus interface for communicating with the wireless transceivers modularly received via the PCMCIA interface and with the wired transceiver according to a PCI bus standard.

32. The access point of claim **30**, wherein the processing circuitry is programmed with a network configuration to selectively route data through the interface circuitry to the plurality of wireless transceivers and the wired link.

33. The access point of claim **30**, wherein the plurality of wireless transceivers operate independently to form a plurality of communication cells.

34. The access point of claim **33**, wherein the plurality of communication cells are formed by the plurality of wireless transceivers operating at different data rates.

35. The access point of claim **33**, wherein the plurality of communication cells are formed by the plurality of wireless transceivers operating at different power levels.

36. A communication system, comprising:

a plurality of access points adapted to be coupled via a wired LAN, each of the plurality of access points comprising:

a control circuit;

a wired transceiver adapted to communicatively couple the control circuit to a wired LAN; and

a wireless transceiver system that is communicatively coupled to the control circuit, the wireless transceiver system adapted to contemporaneously operate on first and second communication channels; and

a plurality of roaming wireless devices, each adapted to wirelessly communicate with the wireless transceiver system using at least one of the first and second communication channels.

37. An access point for establishing communications with a wired link, the access point comprising:

an interface system for modularly receiving a plurality of wireless transceivers for operating on independent wireless communication channels;

interface circuitry operable to communicate with wireless transceivers modularly received via the interface system; and

processing circuitry that couples to the interface circuitry to control communications effected by wireless transceivers modularly received via the interface system.

38. The access point of claim **37**, wherein the interface system is configured to receive a plurality of cards each carrying at least one of the plurality of wireless transceivers.

39. The access point of claim **38**, wherein the plurality of wireless transceivers carried by the plurality of cards have substantially different operating characteristics.

40. An access point for establishing communications with a wired link, the access point comprising:

receiving means for modularly receiving a plurality of wireless transceivers for operating on independent wireless communication channels;

interface means for communicating with wireless transceivers modularly received by the receiving means; and

processing means coupled to the interface means for controlling communications by wireless transceivers modularly received by the receiving means.

* * * * *

UNITED STATES PATENT AND TRADEMARK OFFICE

CERTIFICATE OF CORRECTION

PATENT NO. : 7,013,138 B2
APPLICATION NO. : 10/648726
DATED : March 14, 2006
INVENTOR(S) : Ronald L. Mahany

It is certified that error appears in the above-identified patent and that said Letters Patent is hereby corrected as shown below:

Claim 16, column 21, line 17, delete "wire less" and substitute -- wireless --.

Signed and Sealed this

Eleventh Day of July, 2006

JON W. DUDAS
Director of the United States Patent and Trademark Office

Exhibit G

US007107052B2

(12) **United States Patent**
Mahany

(10) **Patent No.: US 7,107,052 B2**
(45) **Date of Patent: *Sep. 12, 2006**

(54) **LOCAL AREA NETWORK HAVING MULTIPLE CHANNEL WIRELESS ACCESS**

(75) Inventor: **Ronald L. Mahany**, Cedar Rapids, IA (US)

(73) Assignee: **Broadcom Corporation**, Irvine, CA (US)

(*) Notice: Subject to any disclaimer, the term of this patent is extended or adjusted under 35 U.S.C. 154(b) by 207 days.

This patent is subject to a terminal disclaimer.

(21) Appl. No.: **10/648,707**

(22) Filed: **Aug. 26, 2003**

(65) **Prior Publication Data**

US 2004/0038647 A1 Feb. 26, 2004

Related U.S. Application Data

(63) Continuation of application No. 09/357,429, filed on Jul. 20, 1999, now Pat. No. 6,665,536, which is a continuation of application No. 08/878,357, filed on Jun. 27, 1997, now Pat. No. 5,960,344, which is a continuation-in-part of application No. 08/772,895, filed on Dec. 24, 1996, now abandoned, which is a continuation-in-part of application No. 08/696,086, filed on Aug. 13, 1996, now abandoned, which is a continuation of application No. 08/238,180, filed on May 4, 1994, now Pat. No. 5,546,397, which is a continuation-in-part of application No. 08/197,392, filed on Feb. 16, 1994, now abandoned, which is a continuation-in-part of application No. 08/170,121, filed on Dec. 20, 1993, now abandoned.

(51) **Int. Cl.**
H04Q 7/20 (2006.01)

(52) **U.S. Cl.** **455/432.1**; 455/434

(58) **Field of Classification Search** 375/131, 375/147; 455/434, 432.2, 432.1, 422.1, 435.1
See application file for complete search history.

(56) **References Cited**

U.S. PATENT DOCUMENTS

5,291,516 A * 3/1994 Dixon et al. 375/131
5,799,587 A * 8/1998 Smith et al. 375/147
6,665,536 B1 * 12/2003 Mahany 455/434

* cited by examiner

Primary Examiner—Salvatore Cangialosi
(74) *Attorney, Agent, or Firm*—McAndrews Held & Malloy, Ltd.

(57) **ABSTRACT**

A communication network having at least one access point supports wireless communication among a plurality of wireless roaming devices via a first and a second wireless channel. The access point comprises a first and a second transceiver. The first and second transceivers operate on the first and second wireless channels, respectively. Each of the plurality of wireless roaming devices are capable of communicating on the first and second wireless channel. In one embodiment, the first wireless channel is used to exchange data, while the second channel is used to manage such exchanges as well as access to the first channel. In an alternate embodiment, both channels are used to support communication flow, however the first channel supports a protocol that is more deterministic than that of the second channel. Allocation of ones of the plurality of wireless roaming devices from one channel to the next may occur per direction from the access point. It may also result from decisions made by each of the wireless roaming devices made independent of the access point. For example, a decision may be made based on the data type being transferred or based on the current channel load. Such factors may also be used by the access point for allocation determinations. In addition, allocation may be based on the type of roaming device involved, such as allocating peripherals to a slower channel.

24 Claims, 17 Drawing Sheets

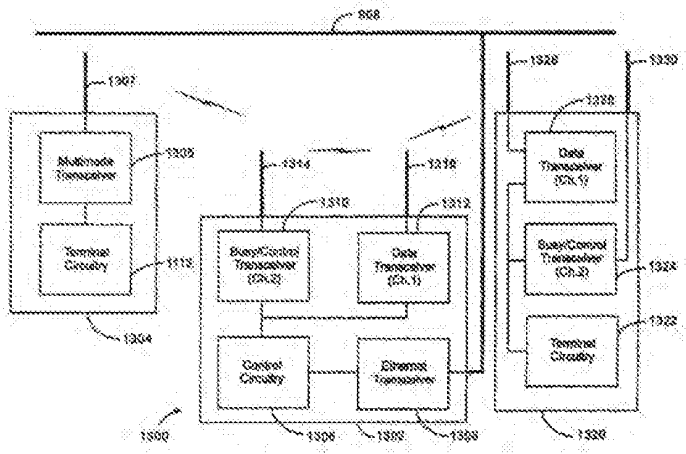

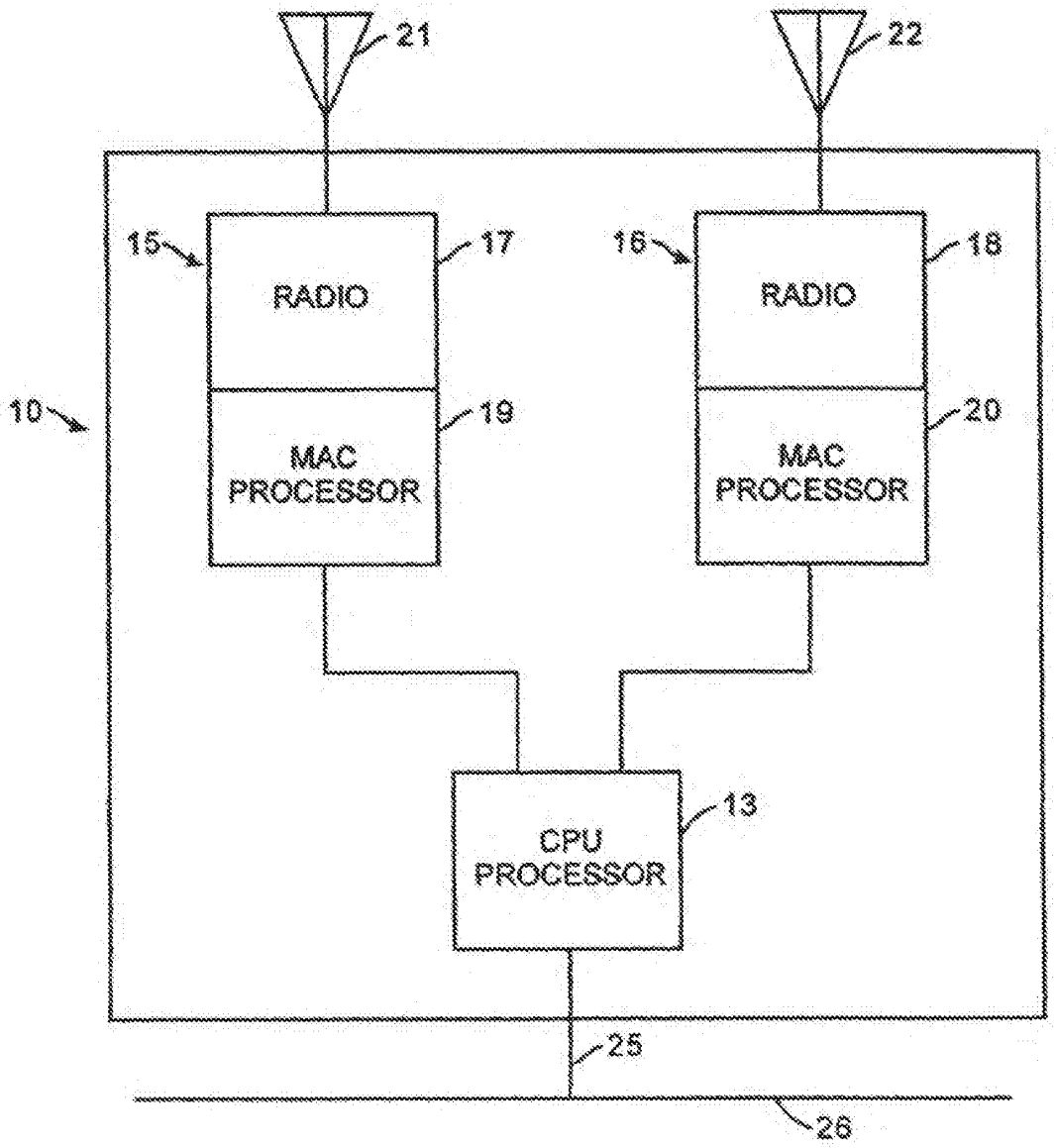
21
22
15
17
16
18
RADIO
RADIO
10
19
20
MAC PROCESSOR
MAC PROCESSOR
13
CPU PROCESSOR
25
26

Fig. 1

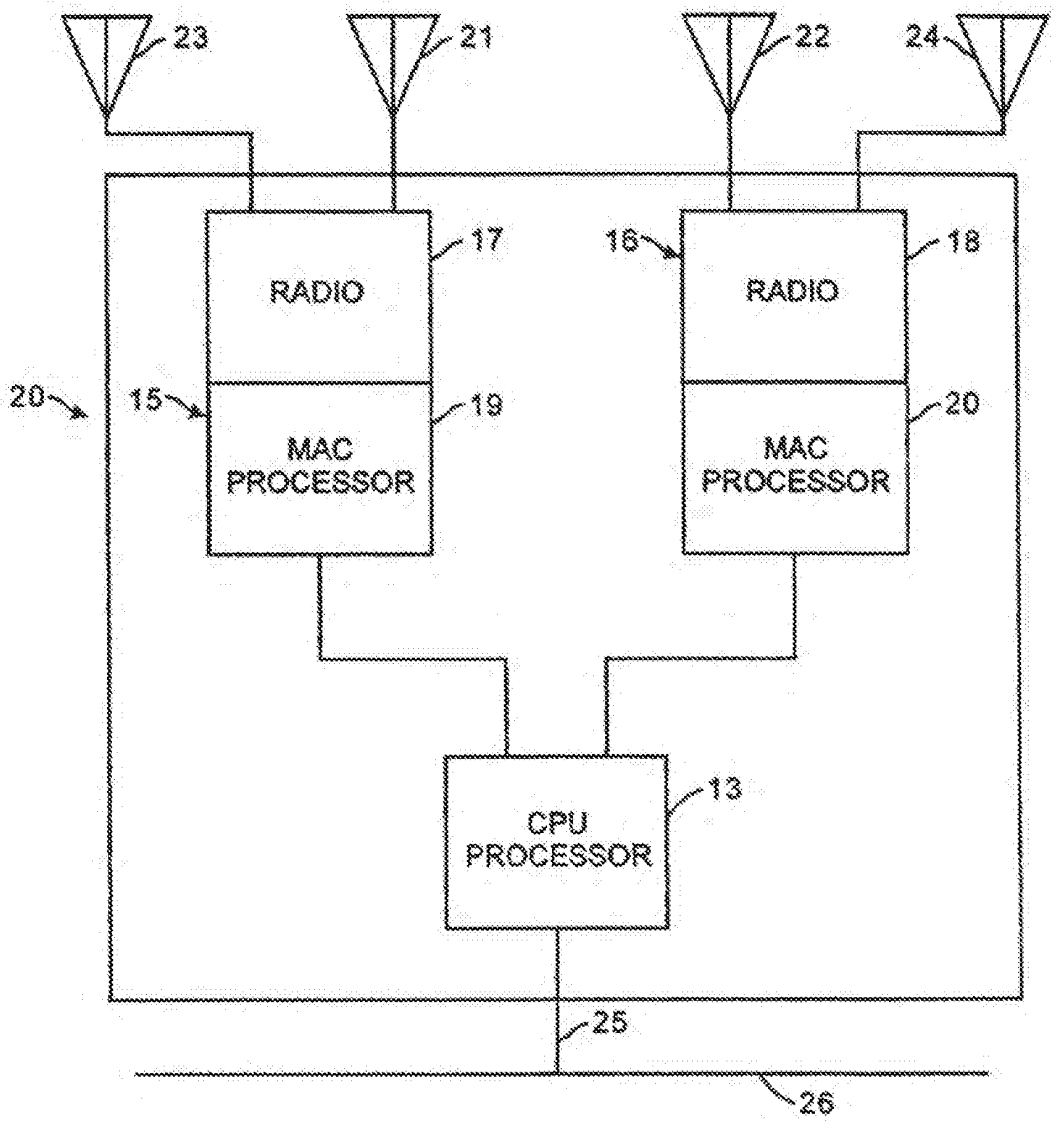
23
21
22
24
17
16
18
RADIO
RADIO
20
15
19
20
MAC PROCESSOR
MAC PROCESSOR
13
CPU PROCESSOR
25
26

Fig. 2

Exhibit A

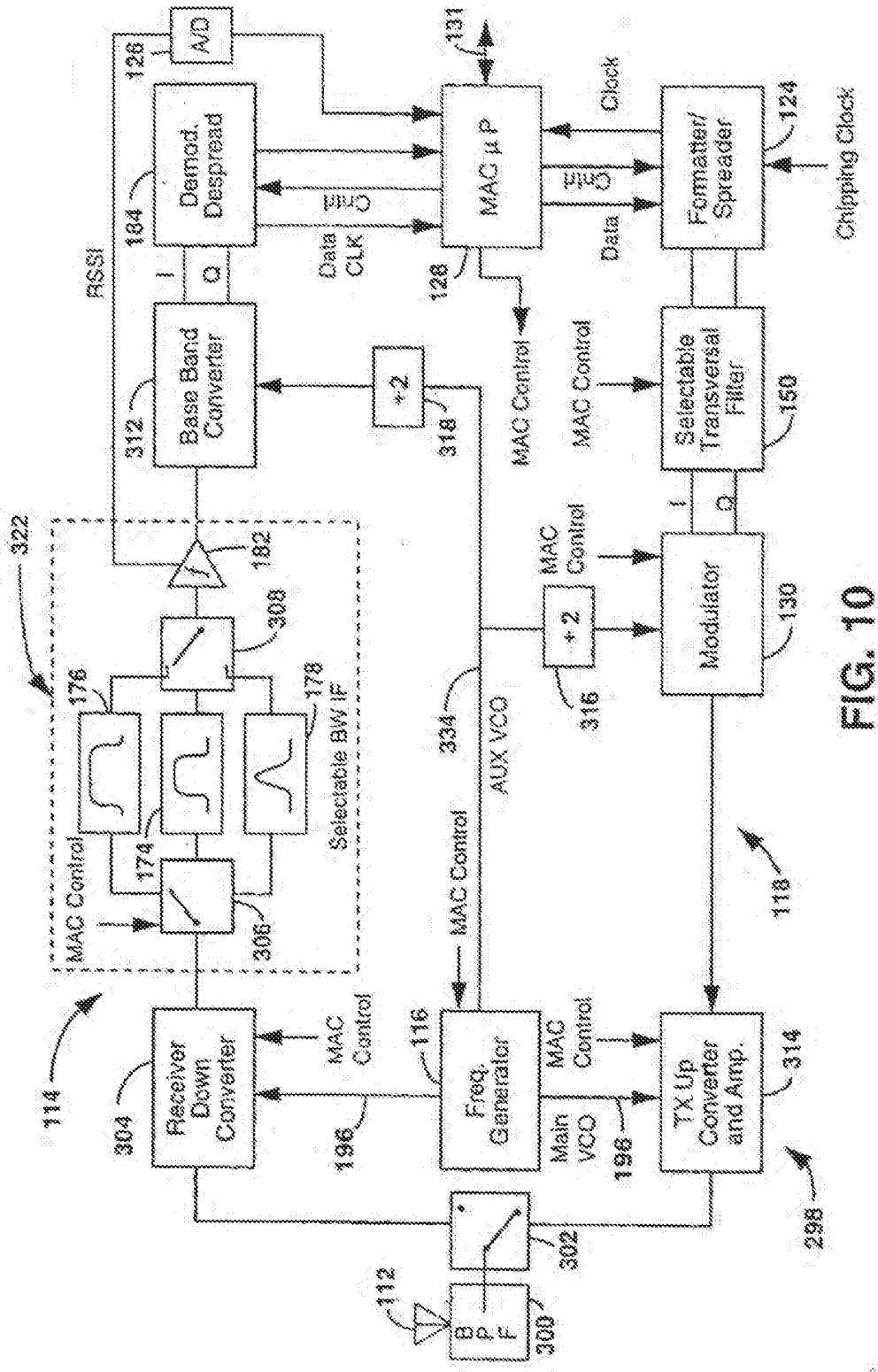
A/D
128
Demod. Despread
184
RSSI
I
Q
Data
CLK
MAC μP
131
Clock
Formatter/ Spreader
124
Chipping Clock
Base Band Converter
312
÷2
318
MAC Control
Selectable Transversal Filter
150
322
182
308
176
178
Selectable BW IF
174
306
MAC Control
334
AUX VCO
÷2
316
Modulator
130
118
114
Receiver Down Converter
304
196
Freq. Generator
116
Main VCO
TX Up Converter and Amp.
314
298
302
112
B P F
300

FIG. 10

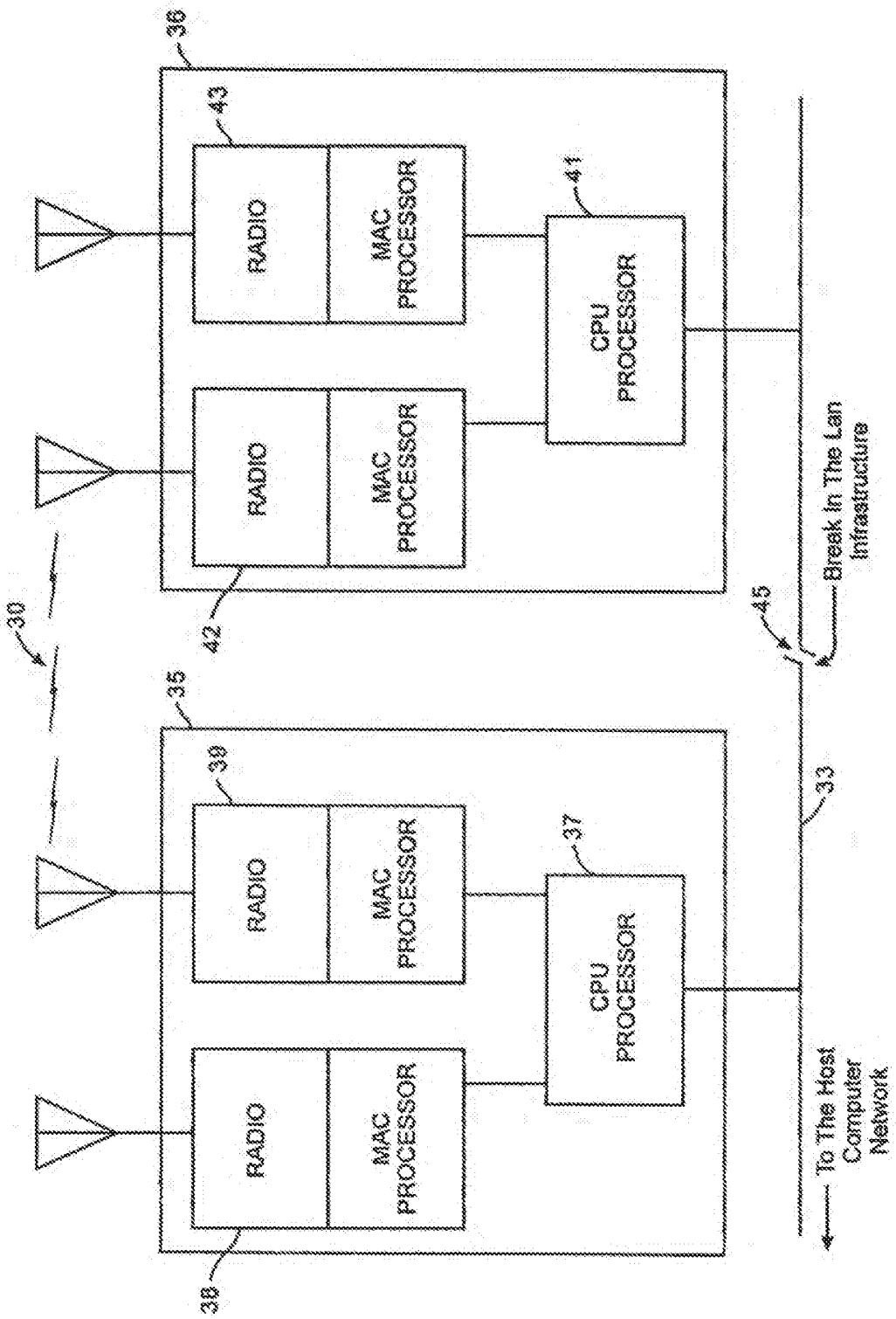
30
36
43
RADIO
MAC PROCESSOR
41
CPU PROCESSOR
RADIO
MAC PROCESSOR
42
35
39
RADIO
MAC PROCESSOR
37
CPU PROCESSOR
RADIO
MAC PROCESSOR
38
45
33
Break In The Lan Infrastructure
To The Host Computer Network

Fig.3

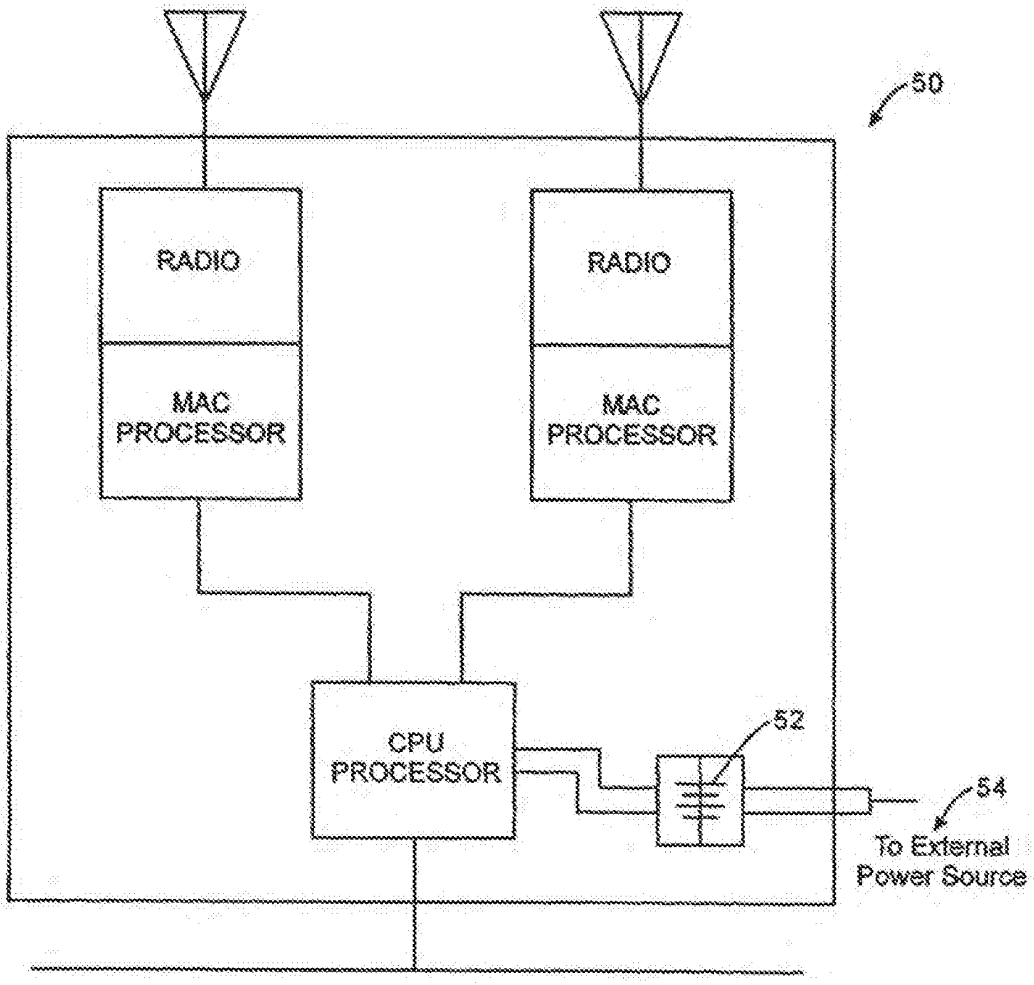
50
RADIO
MAC PROCESSOR
RADIO
MAC PROCESSOR
CPU PROCESSOR
52
54
To External Power Source

Fig. 4

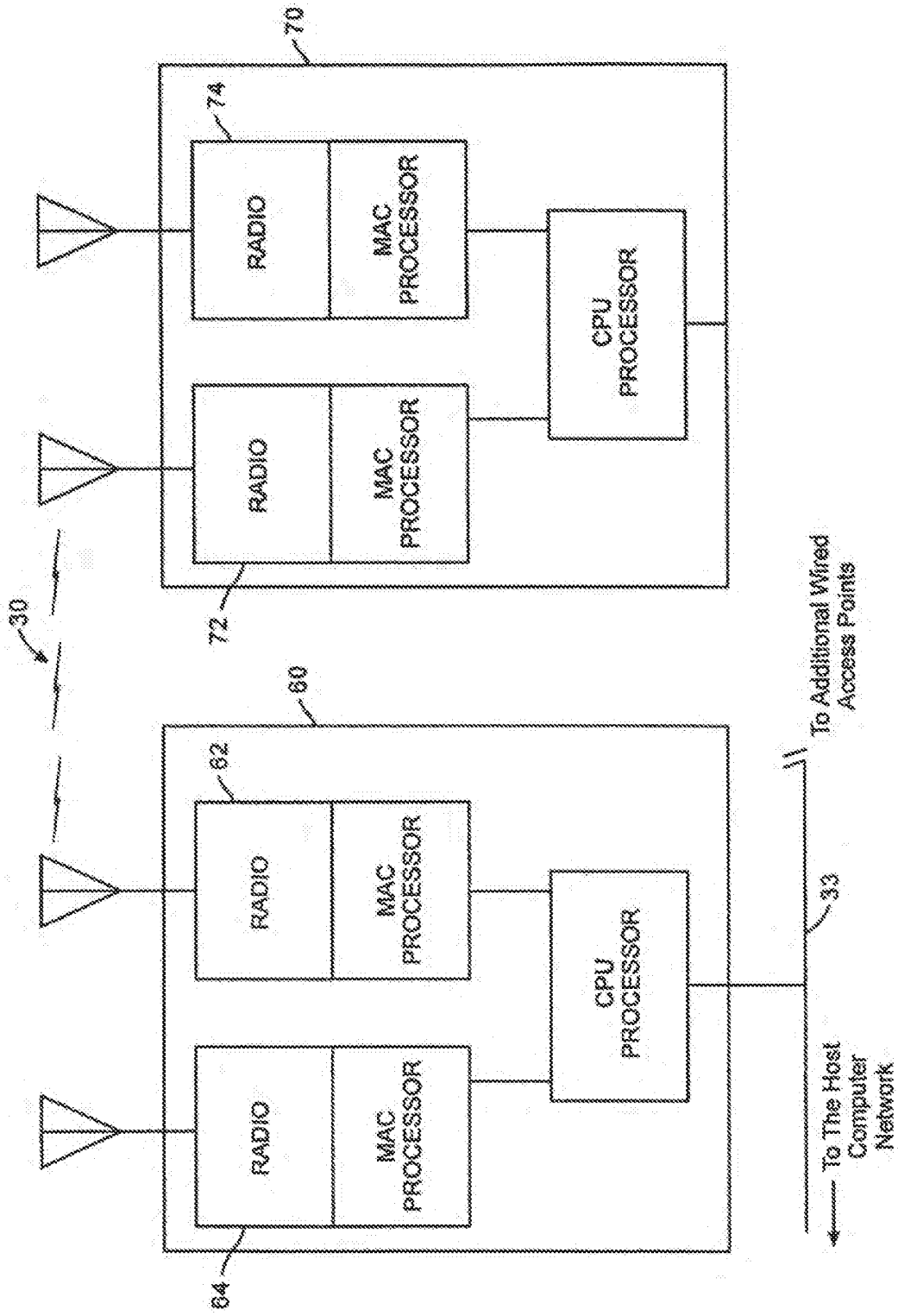
70
74
RADIO
MAC PROCESSOR
CPU PROCESSOR
RADIO
MAC PROCESSOR
72
30
60
62
RADIO
MAC PROCESSOR
CPU PROCESSOR
RADIO
MAC PROCESSOR
64
To Additional Wired Access Points
33
To The Host Computer Network

Fig.5

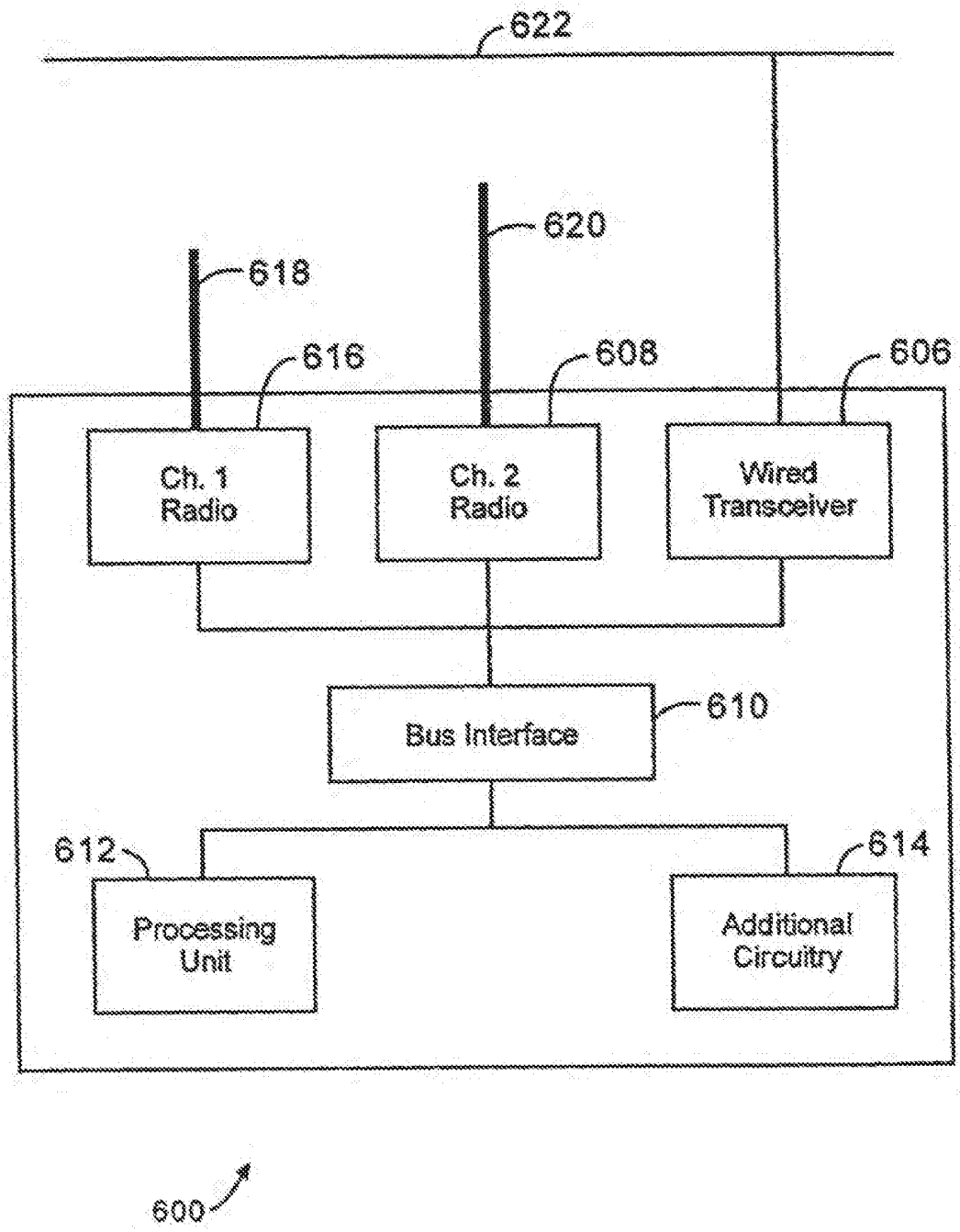
622
620
618
616
608
606
Ch. 1 Radio
Ch. 2 Radio
Wired Transceiver
Bus Interface
610
612
614
Processing Unit
Additional Circuitry
600

Fig. 6

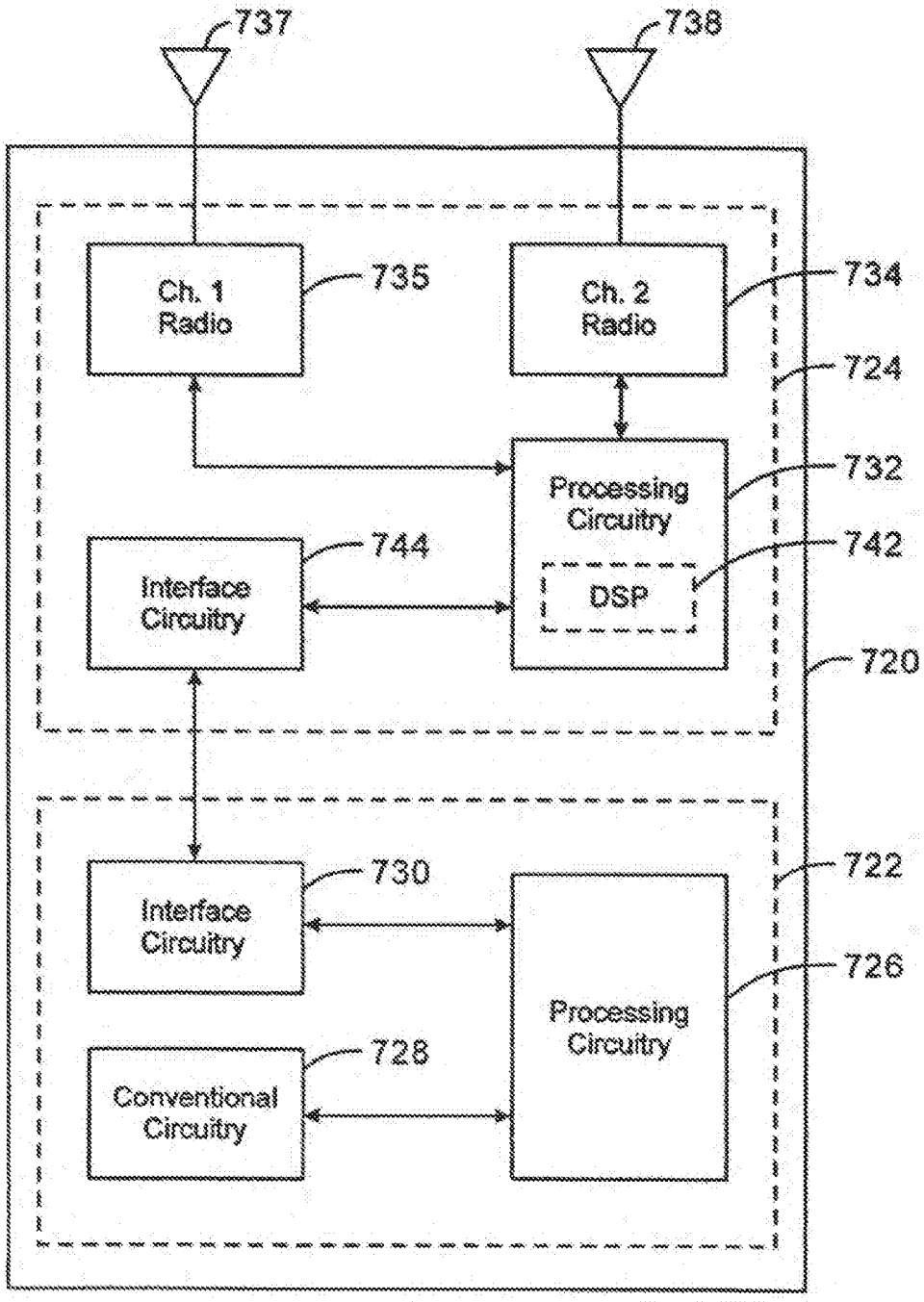
737
738
Ch. 1 Radio
735
Ch. 2 Radio
734
724
Processing Circuitry
732
Interface Circuitry
744
DSP
742
720
Interface Circuitry
730
722
Processing Circuitry
726
Conventional Circuitry
728

Fig. 7a

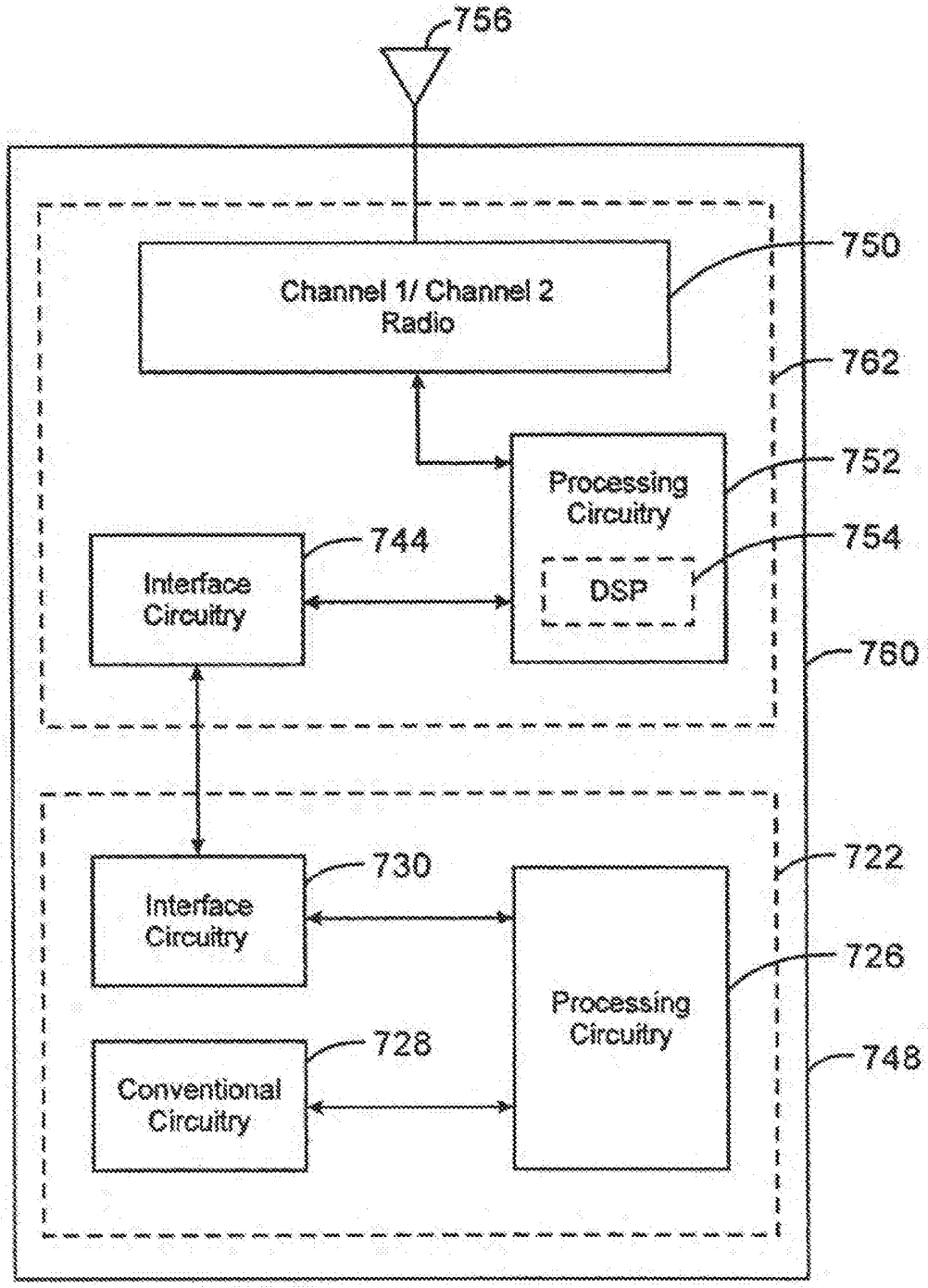
756
Channel 1/ Channel 2
Radio
750
762
Processing
Circuitry
752
754
DSP
Interface
Circuitry
744
760
Interface
Circuitry
730
722
726
Processing
Circuitry
Conventional
Circuitry
728
748

Fig. 7b

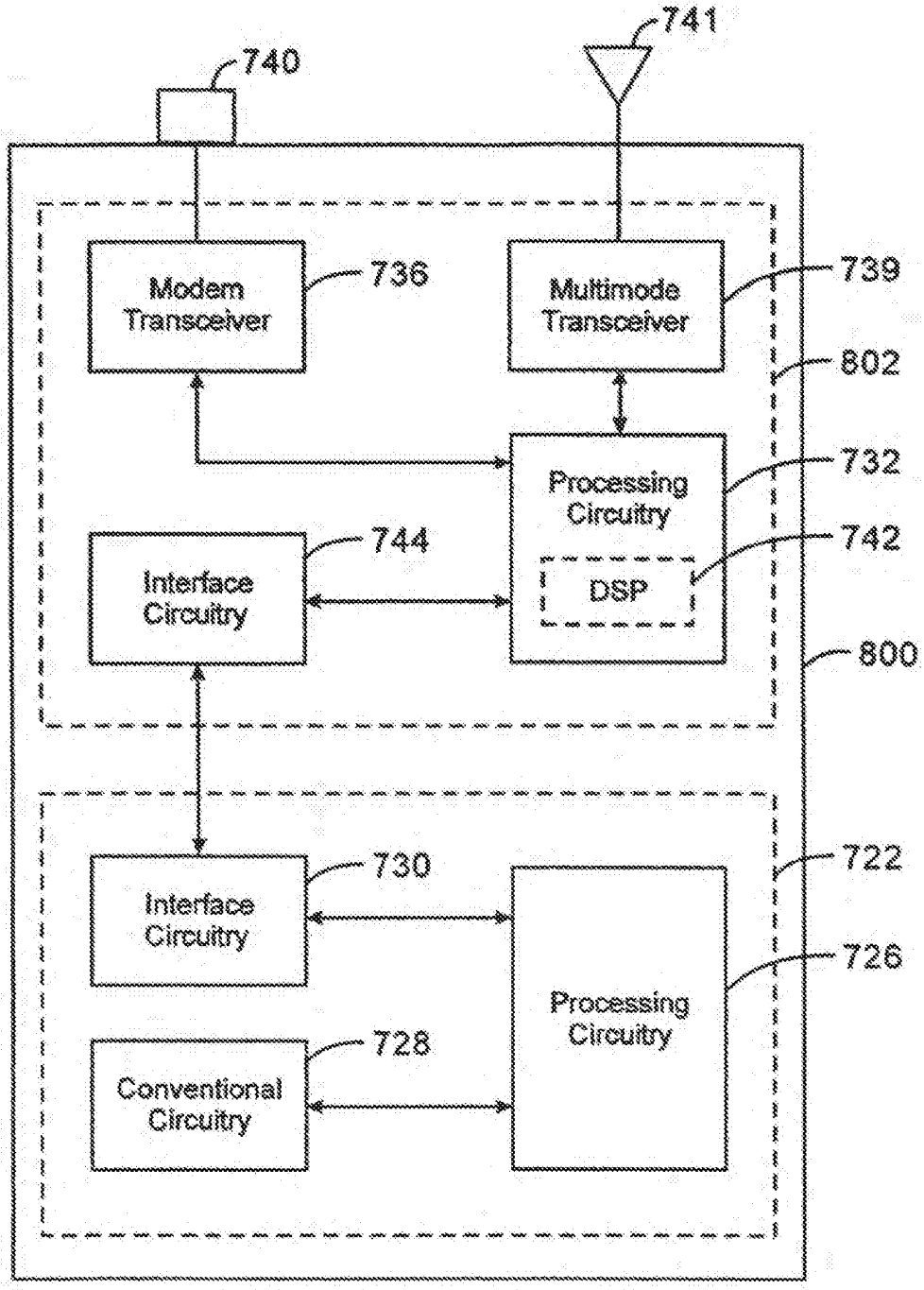
741
740
Modem Transceiver
736
Multimode Transceiver
739
802
Processing Circuitry
732
Interface Circuitry
744
DSP
742
800
Interface Circuitry
730
722
Processing Circuitry
726
Conventional Circuitry
728

Fig. 8

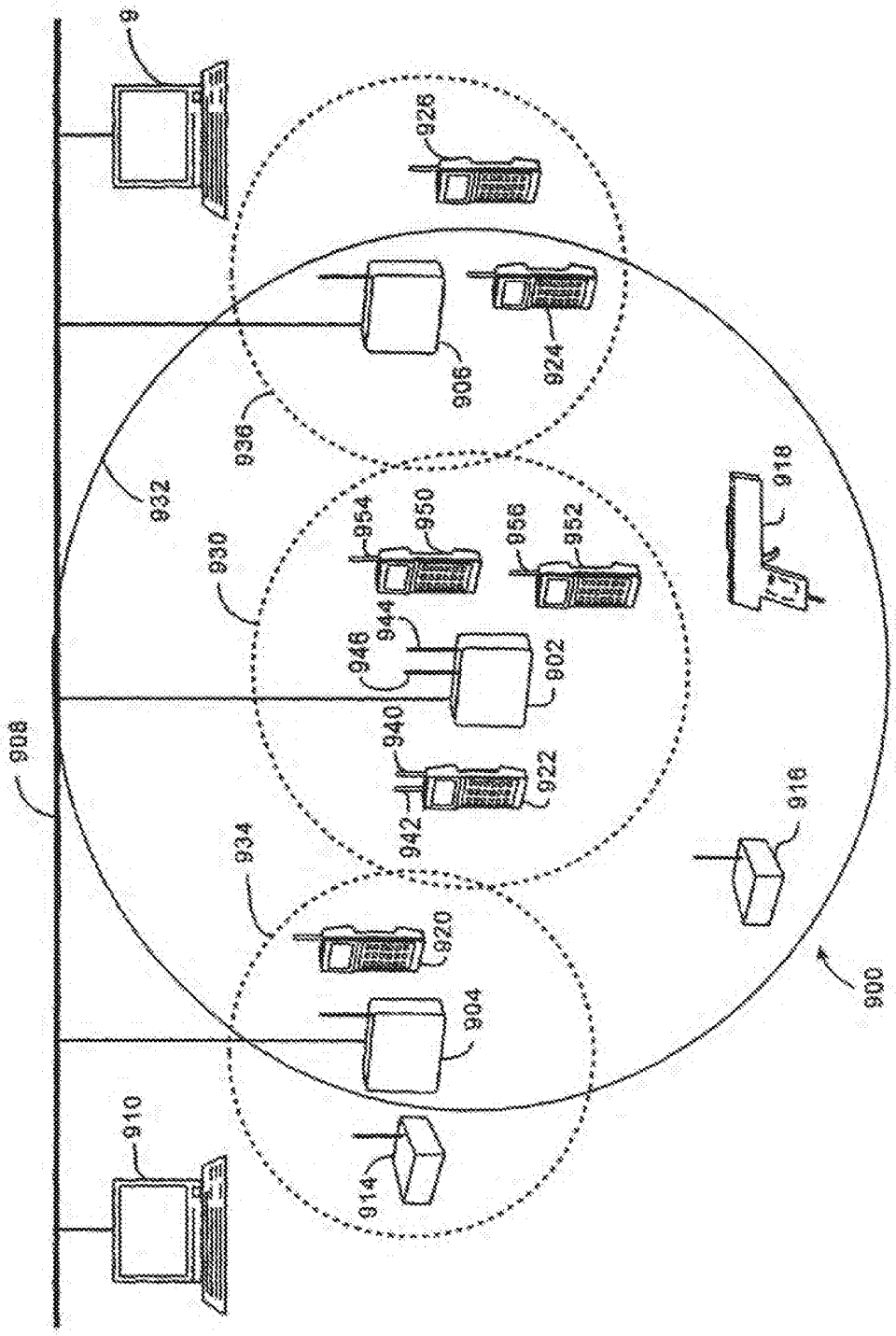
9
926
906
924
936
932
930
954
950
956
952
918
944
946
902
940
922
942
908
934
920
904
916
900
910
914

Fig.9

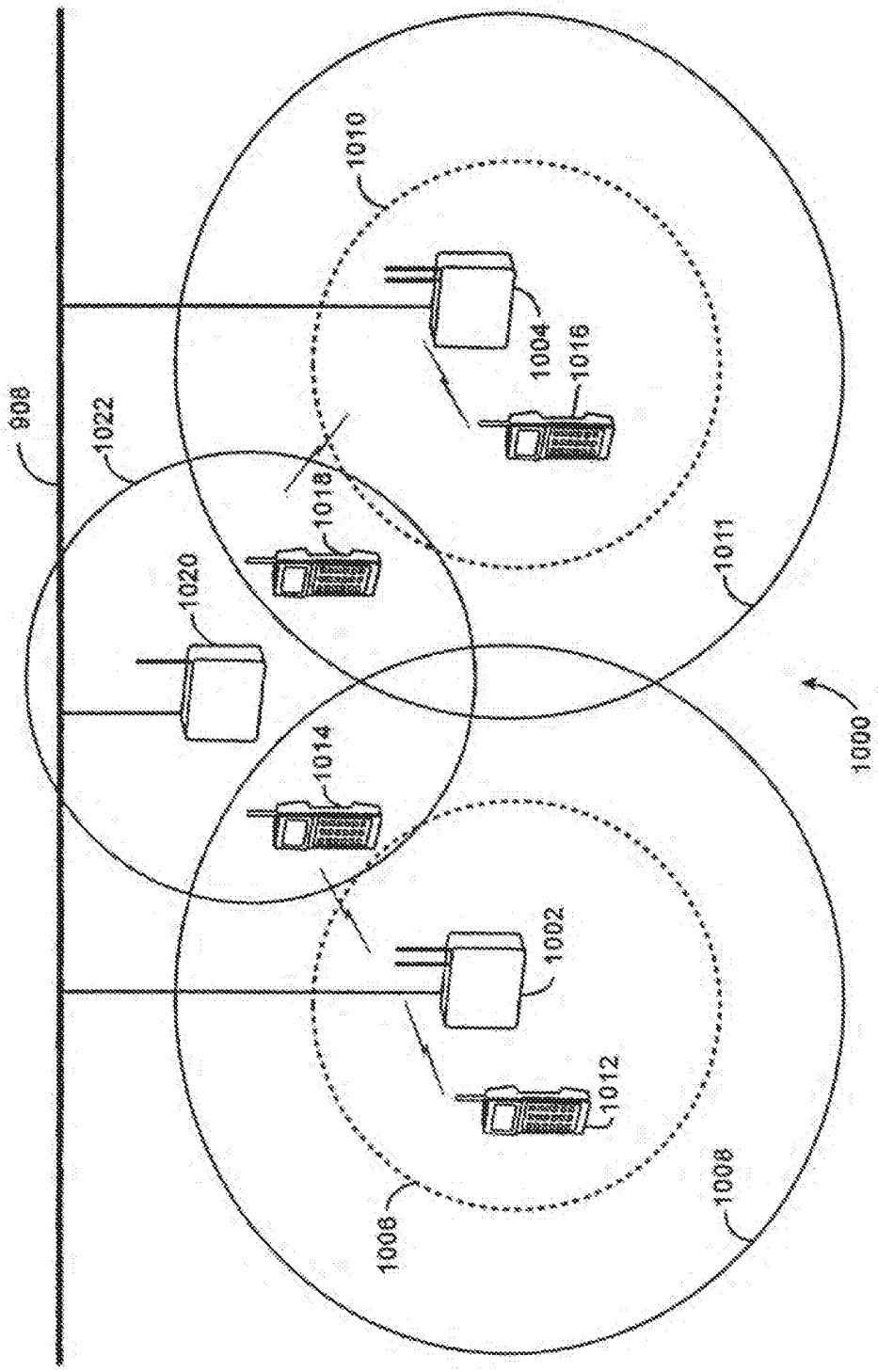
908
1022
1020
1010
1004
1016
1018
1011
1000
1014
1002
1012
1006
1008

Fig.10

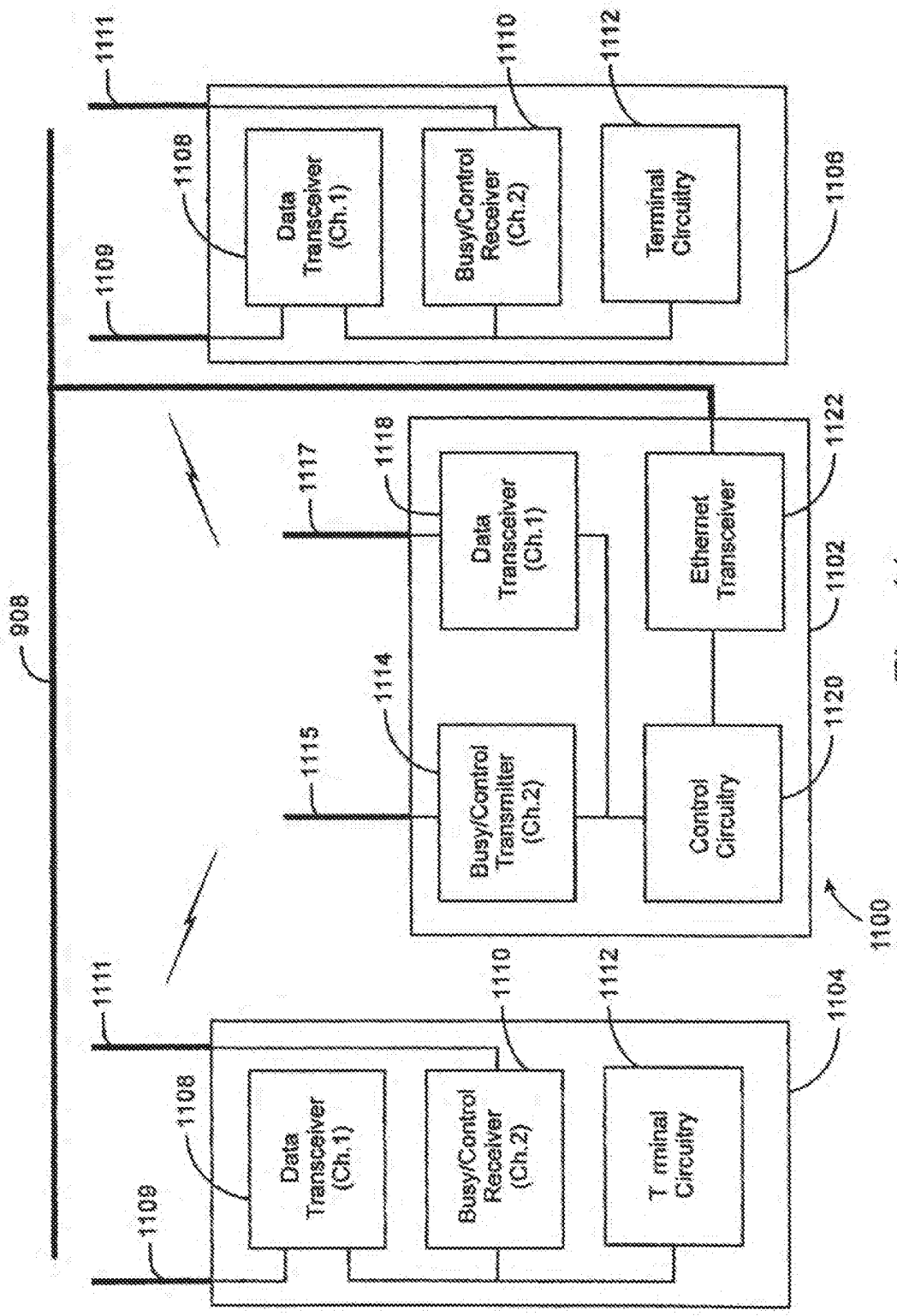
908
1111
1109
1108
Data Transceiver (Ch.1)
1110
Busy/Control Receiver (Ch.2)
1112
Terminal Circuitry
1106
1117
1118
Data Transceiver (Ch.1)
1122
Ethernet Transceiver
1102
1115
1114
Busy/Control Transmitter (Ch.2)
1120
Control Circuitry
1100
1111
1109
1108
Data Transceiver (Ch.1)
1110
Busy/Control Receiver (Ch.2)
1112
T rminal Circuitry
1104

Fig. 11

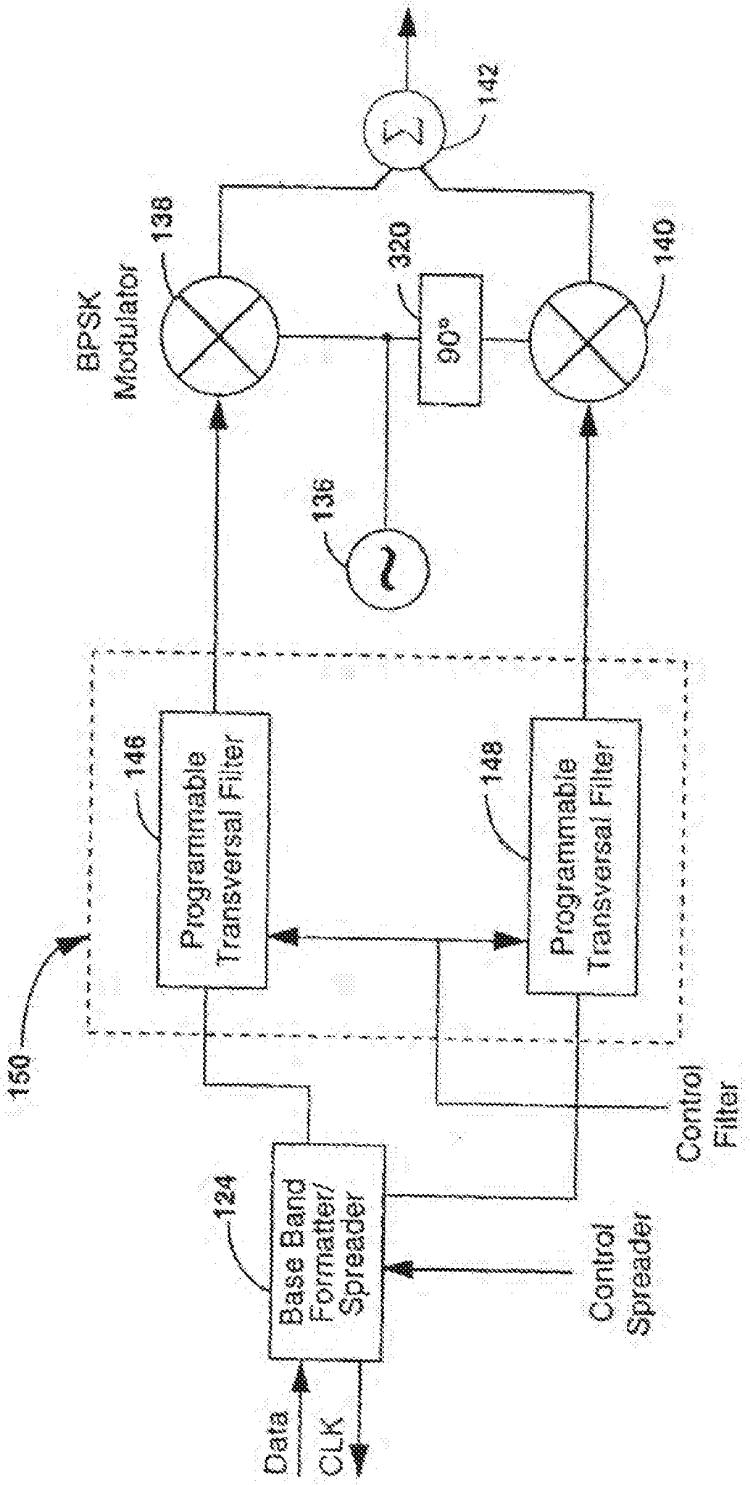
BPSK Modulator
138
320
90°
140
142
136
146
Programmable Transversal Filter
148
Programmable Transversal Filter
150
Control Filter
124
Base Band Formatter/ Spreader
Control Spreader
Data
CLK

FIG. 11

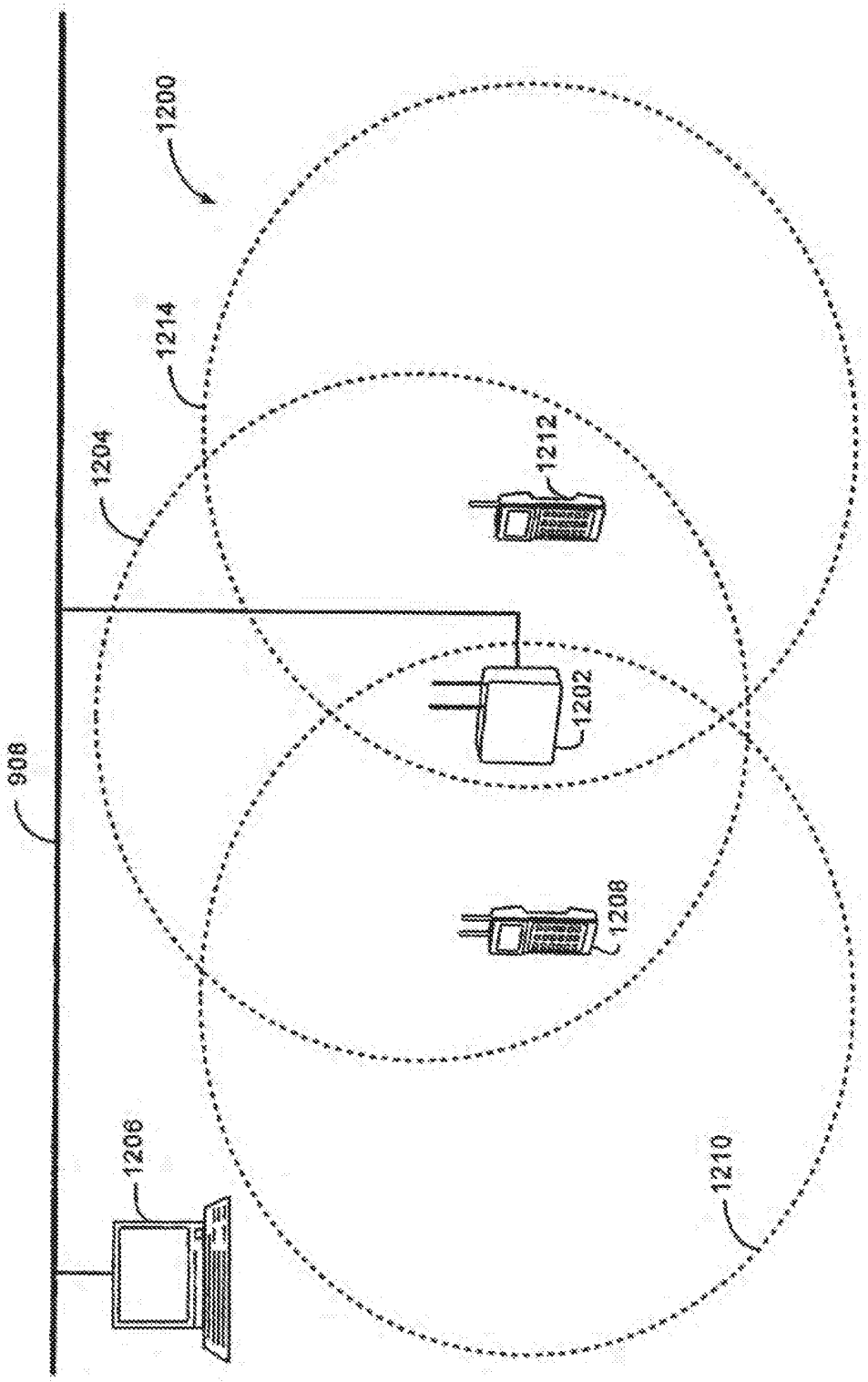

Fig. 12

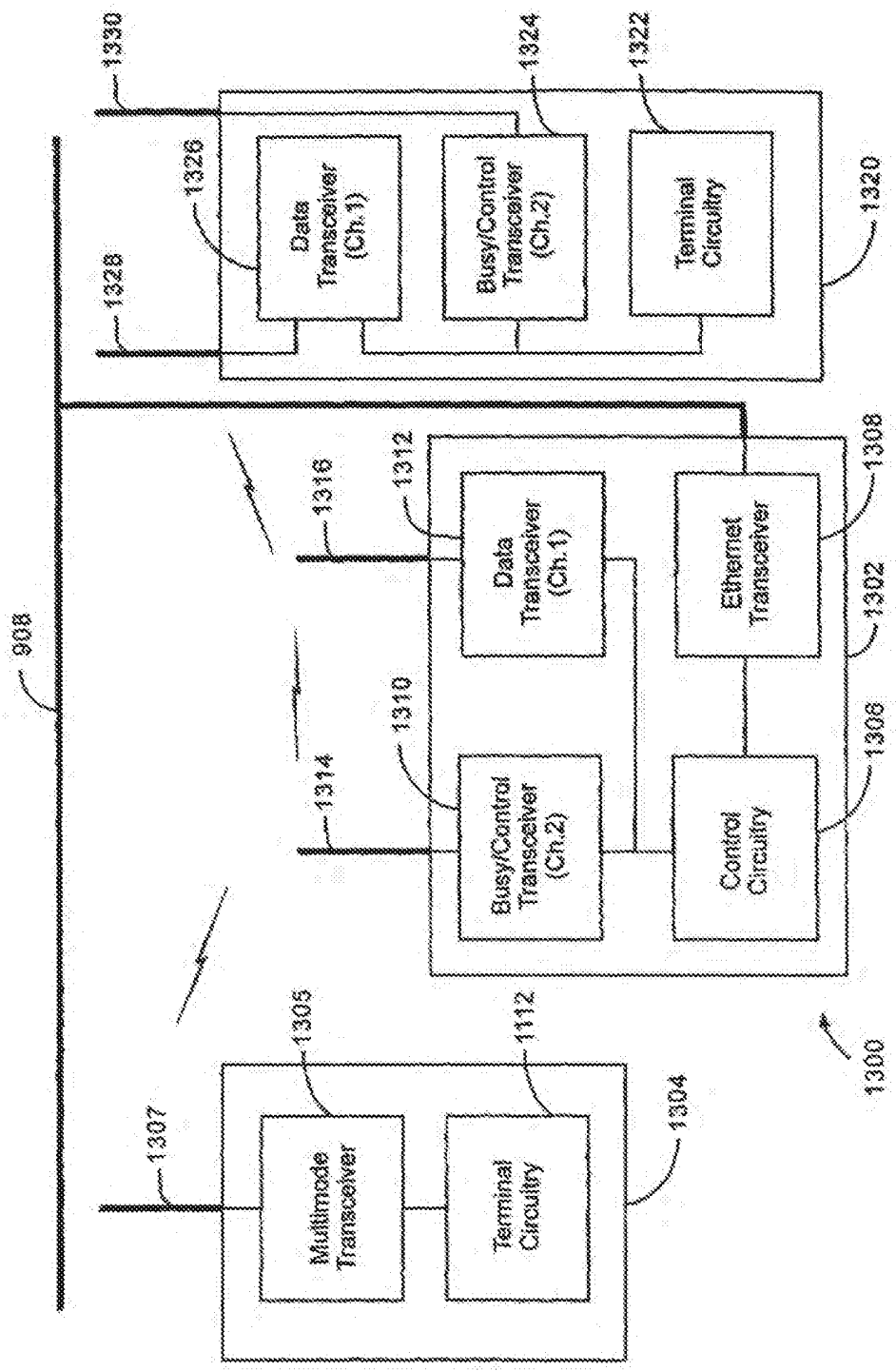
908
1330
1328
1326
Data Transceiver (Ch.1)
1324
Busy/Control Transceiver (Ch.2)
1322
Terminal Circuitry
1320
1316
1312
Data Transceiver (Ch.1)
Ethernet Transceiver
1308
1302
1314
1310
Busy/Control Transceiver (Ch.2)
Control Circuitry
1306
1300
1307
1305
Multimode Transceiver
1112
Terminal Circuitry
1304

Fig. 13

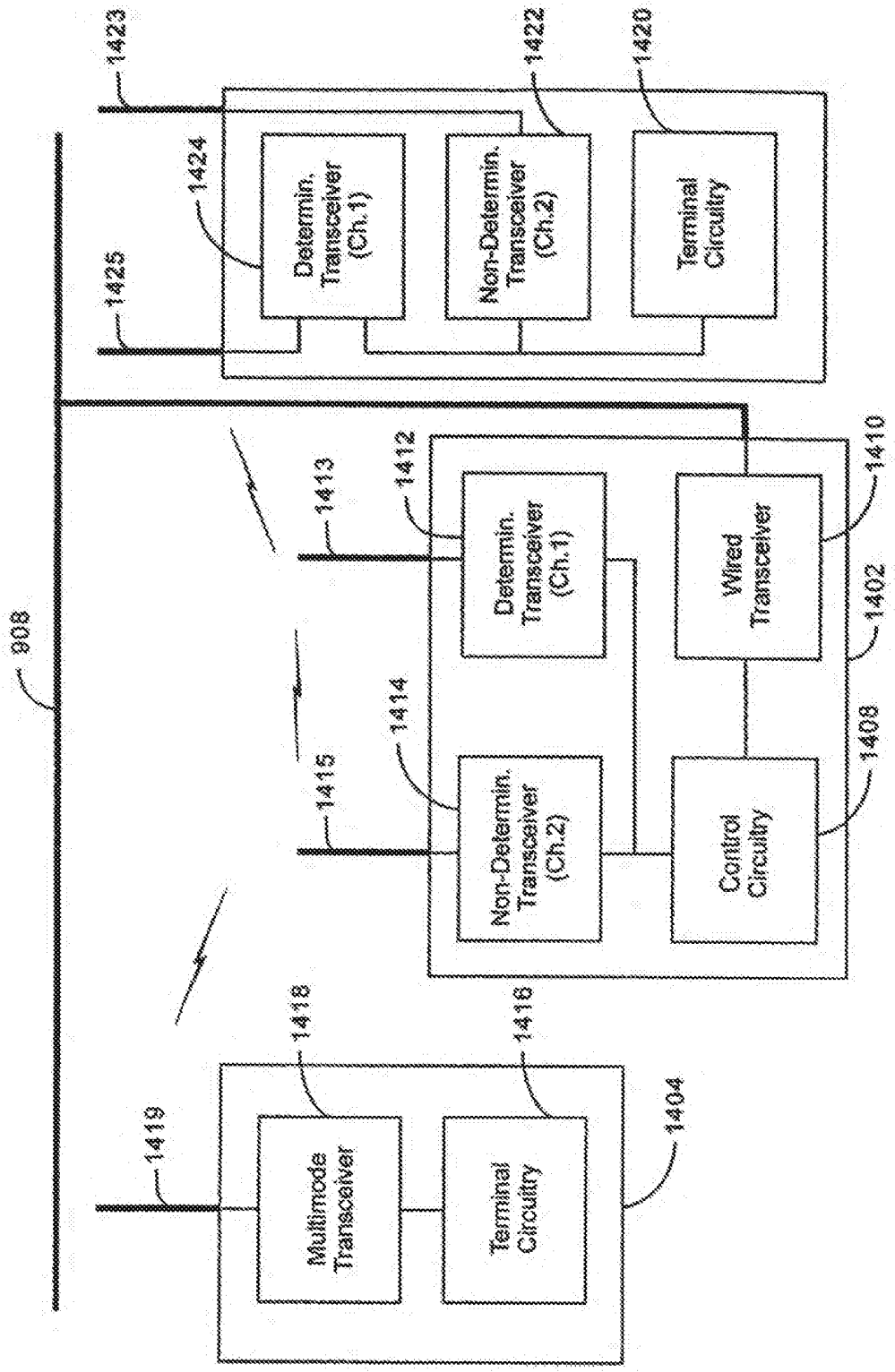
1423
1422
1420
1424
Determin. Transceiver (Ch.1)
Non-Determin. Transceiver (Ch.2)
Terminal Circuitry
1425
1410
1413
1412
Determin. Transceiver (Ch.1)
Wired Transceiver
1402
908
1414
1415
Non-Determin. Transceiver (Ch.2)
Control Circuitry
1408
1418
1416
1419
Multimode Transceiver
Terminal Circuitry
1404

Fig. 14a

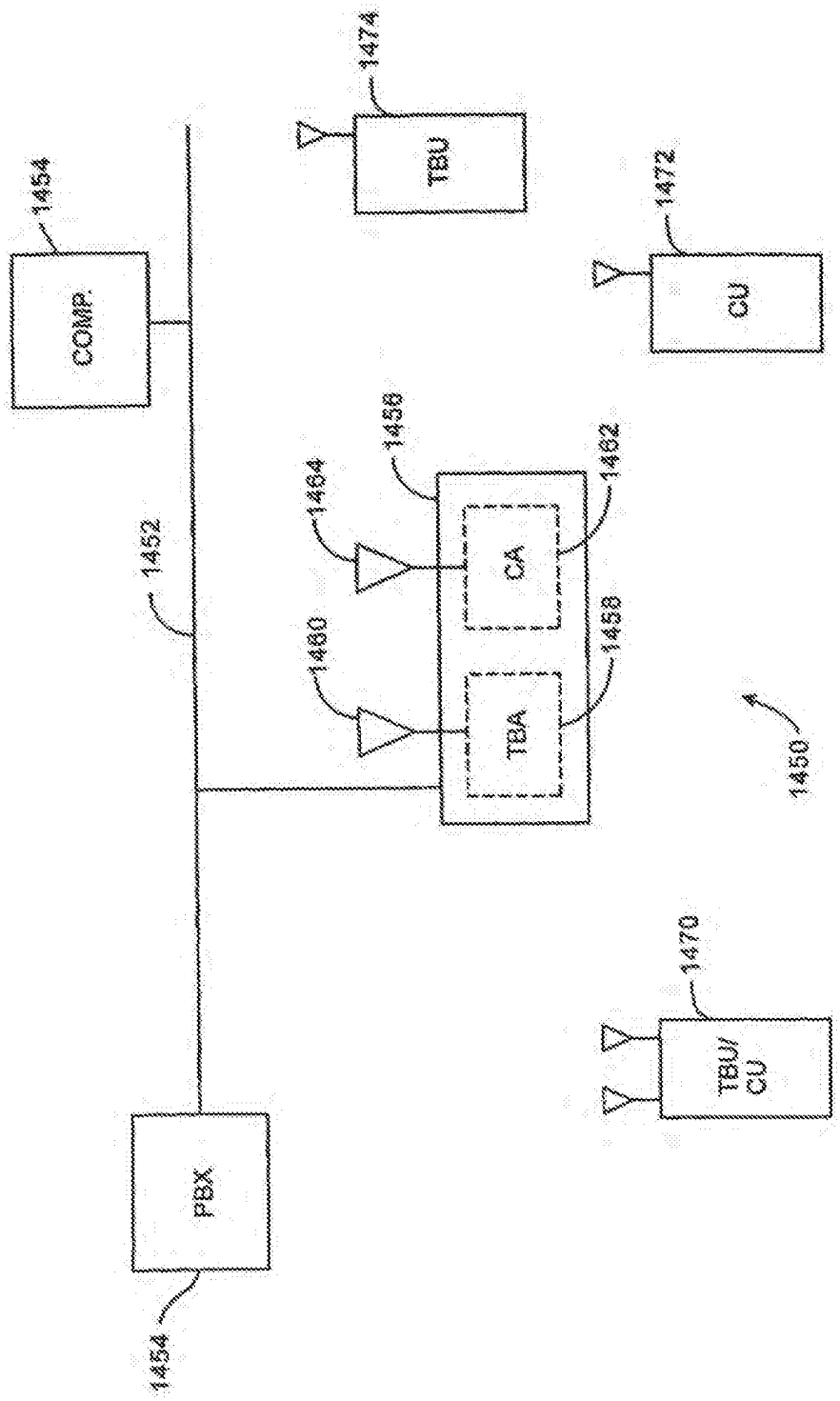
1474
TBU
1454
COMP.
1472
CU
1456
1464
1462
CA
1452
1460
1458
TBA
1450
1470
TBU/
CU
PBX
1454

Fig. 14b

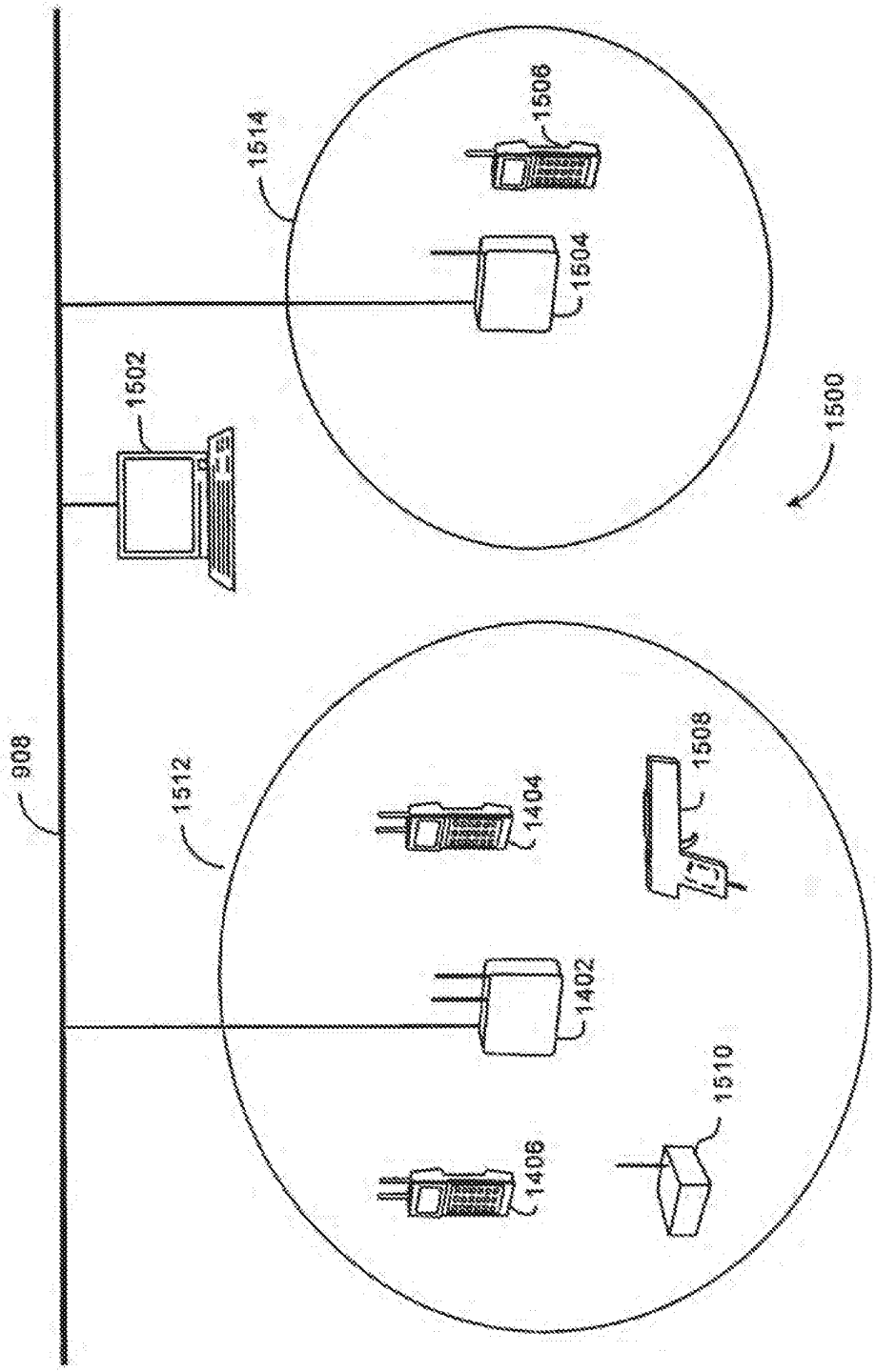

Fig. 15

LOCAL AREA NETWORK HAVING MULTIPLE CHANNEL WIRELESS ACCESS

CROSS-REFERENCE TO RELATED APPLICATIONS

The present application is a continuation of U.S. application Ser. No. 09/357,429, filed Jul. 20, 1999 now U.S. Pat. No. 6,665,536, which is continuation of U.S. application Ser. No. 08/878,357 filed Jun. 27, 1997 now U.S. Pat. No. 5,960,344, which is a continuation-in-part of U.S. application Ser. No. 08/772,895 filed Dec. 24, 1996, abandoned, which is a continuation-in-part of U.S. application Ser. No. 08/696,086 filed Aug. 13, 1996, abandoned, which is a continuation of U.S. application Ser. No. 08/238,180 filed May 4, 1994, now issued as U.S. Pat. No. 5,546,397, which is a continuation-in-part of U.S. application Ser. No. 08/197,392 filed Feb. 16, 1994, abandoned, which is a continuation-in-part of U.S. application Ser. No. 08/170,121 filed Dec. 20, 1993, abandoned.

The U.S. application Ser. No. 08/772,895 filed Dec. 24, 1996, also claims priority to PCT Application Ser. No. PCT/US96/09474, filed on Jun. 3, 1996.

The present application is related to U.S. application Ser. No. 10/648,726, titled "LOCAL AREA NETWORK HAVING MULTIPLE CHANNEL WIRELESS ACCESS" filed concurrently herewith.

All of the aforementioned applications are hereby incorporated herein by reference in their entirety. In addition, U.S. Pat. No. 5,425,051 issued Jun. 13, 1995 to Ronald L. Mahany is also hereby incorporated herein by reference in its entirety.

BACKGROUND

1. Technical Field

The present invention relates generally to access points used in wireless local area networks, and more specifically to an access point which includes multiple wireless adapters.

2. Related Art

Wireless local area networks (WLAN's) use radio frequency transmissions to communicate between roaming computer devices and access points (or base stations). The access points are connected to an infrastructure that electronically connects all of the access points to a host system. The wired infrastructure and the access points make up an information distribution network used for the transfer of information and for communications.

In a wireless networking environment, various types of devices may need to communicate within a given area. When incompatibilities between device types arise, the wireless infrastructure must accommodate the various device types. Accommodating the different device types in a single infrastructure is generally difficult to accomplish. Further, devices within the wireless networking environment typically communicate differing types of data, each with its own priority and bandwidth requirements. Accommodating the various types of data with their related priorities often could not be accomplished by prior devices due to bandwidth limitations, conflicting priorities and incompatible standards within the wireless network.

In prior WLANs, a first wireless terminal that desired to communicate with a base station often could not detect transmissions from a second wireless terminal currently engaged in ongoing communication with the access point. As a result, the wireless terminal often initiated transmissions that collided with the ongoing communications. Operation of this type is referred to as a "hidden terminal" situation. To solve the hidden terminal situation, some prior base stations were configured with a second transmitter for delivering a carrier signal on a "busy channel" whenever the base station was engaged in communication on the "data channel." All terminals were also fitted with a second receiver, tuned to the busy channel, and required to check the busy channel before initiating communication on the data channel. However, the additional power required, bandwidth used, hardware needed and associated cost made the busy channel solution undesirable for most applications.

Some prior WLANs attempted to solve operational difficulties by simply increasing the transmission capacity available on the infrastructure. Such expansion temporarily decreased conflicts in operation of the WLANs. However, the infrastructure, which is expensive to install, typically became overloaded quickly resulting in the same or similar problems.

SUMMARY OF THE INVENTION

The present invention is directed to communication network that supports communication within a premises. The communication network comprises an access point, a plurality of wireless roaming devices, a first wireless communication channel, and a second wireless communication channel. The access point itself comprises a first processing circuit, a first radio transceiver coupled to the first processing circuit, and a second radio transceiver coupled to the first processing circuit. Each of the plurality of wireless roaming devices comprising a second processing circuit, a third radio transceiver and a radio receiver. Therein, the first wireless communication channel that supports communication flow via the communication network, while the second wireless communication channel is used to manage the flow of communication through the first wireless communication channel. In addition, the first and third radio transceivers are operable on the first wireless communication channel, while the second radio transceiver and the radio receiver are operable on the second wireless communication channel.

The communication network also supports various other aspects of the present invention. For example, the access point may further comprise a wired communication interface circuit coupled to the first processing circuit. Selective participation on the first and second communication channels may also provide further benefits. In one embodiment, each of the plurality of wireless roaming devices utilizes the radio receiver on the second wireless communication channel before participating with the third radio transceiver on the first wireless communication channel. In another, each utilizes the radio receiver on the second wireless communication channel to gain access with the third radio transceiver on the first wireless communication channel. Each may also or alternatively utilize the second wireless communication channel to identify ongoing communication on the first wireless communication channel to, perhaps, provide an indication as to when channel capacity may become available.

Other aspects may be found in an alternate communication network which also supports communication within a premises. This communication network comprises an access point, first and second wireless communication channels and plurality of wireless roaming devices. The first wireless communication channel has first communication flow characteristics, while the second wireless communication channel has second communication flow characteristics. The first

and second radio transceivers participate on the first and second wireless communication channels, respectively. Therein, each of the plurality of wireless roaming devices comprises a second processing circuit and means for selectively participating on the first and second wireless communication channels.

The access point may also comprise a wired communication interface circuit coupled to the first processing circuit that may itself comprise a first and a second microprocessor. Additionally, at least one of the plurality of wireless roaming devices may participate on the first wireless communication channel while the other of the plurality of wireless roaming devices participates on the second wireless communication channel. Although the at least one of the plurality of wireless roaming devices may participate on the first wireless communication channel as directed by the access device, other variations and combinations are also possible. For example, at least one of the plurality of wireless roaming devices may participate on the first wireless communication channel to exchange a specific type of data, and/or may participate based on current channel conditions. Such participation may be based the fact that, in some embodiments, the second wireless communication channel is more deterministic than the first wireless communication channel.

In any of the aforementioned embodiment, the communication network may comprise at least a second access point. Other variations and aspects of the present invention will become apparent to ones of ordinary skill in the art after reviewing the entire specification and drawings.

BRIEF DESCRIPTION OF THE DRAWINGS

FIG. **1** is a schematic representation of a high reliability access point in accordance with the present invention.

FIG. **2** is a schematic representation of another high reliability access point of the present invention utilizing an antenna diversity scheme at each wireless adapter.

FIG. **3** is a representation of a distribution network for a wireless LAN system utilizing high reliability access points.

FIG. **4** is a schematic representation of a high reliability access point with a backup power supply.

FIG. **5** is a schematic representation of a remote high reliability access point connecting to the distribution network.

FIG. **6** is block diagram illustrating an embodiment of an access point built in accordance with the present invention which includes two radios and a wired network interface, a first one of the radios operable on a first channel and a second one of the radios operable on a second channel.

FIG. **7***a* is a block diagram illustrating an embodiment of a portable data terminal according to the present invention, the portable data terminal having a single PCMCIA card that contains two radios, a first one of the radios operable on the first channel and a second one of the radios operable on the second channel.

FIG. **7***b* is a block diagram illustrating an alternative embodiment of the portable data terminal of FIG. **7***a*, wherein the single PCMCIA card includes a single radio operable on the first channel and the second channel and controlled by the processing circuitry.

FIG. **8** is a block diagram illustrating an alternative embodiment of a portable data terminal according to the present invention, the portable data terminal having a single PCMCIA card that contains a multi-channel wireless transceiver and a wired network interface.

FIG. **9** is a diagram illustrating a communication system built and operating according to the present invention, the communication system including at least one access point having multiple radios, portable terminals having multiple radios and portable terminals having multi-channel radios.

FIG. **10** is a diagram illustrating a communication system built and operating according to the present invention wherein one of the access points facilitates communication between portable terminal units operating on different channels within its cell by routing communication between two of its radios.

FIG. **11** is a block diagram illustrating an embodiment of a communication system according to the present invention wherein an access point uses a dedicated control/busy channel transmitter to manage transmissions between the access point and a plurality of roaming portable data terminals within its cell.

FIG. **12** is a drawing illustrating advantageous operation of the access device and portable data terminals of FIG. **11** when two roaming terminals encounter hidden terminal conditions.

FIG. **13** is a block diagram illustrating an alternate embodiment of the communication system of the present invention wherein an access point includes a dedicated control/busy channel transceiver and roaming data terminals communicate with the access point using either frequency nimble multi-channel transceivers or dedicated control/busy channel transceivers.

FIG. **14***a* is a block diagram illustrating a communication system of the present invention wherein access points and portable data terminals operate on a deterministic first channel and a non-deterministic second channel and the system routes communications on the channels based upon system conditions.

FIG. **14***b* is a diagram illustrating operation of a communication system of the present invention having both wired and wireless communication capability that includes at least one access point providing communication over a deterministic, time bounded first channel and a non-deterministic, contention access second channel.

FIG. **15** is a diagram illustrating the use of the access points and portable data terminals of FIG. **14***a* wherein the system routes various transmissions within the network system according to system conditions such as channel activity, data type and data priority.

DETAILED DESCRIPTION

Referring now to the drawings wherein like reference numerals designate identical or corresponding parts throughout the several views, FIG. **1** shows a high reliability access point **10** built in accordance with the present invention. An access point is a base station on a wireless local area network with which roaming portable or mobile computer devices can connect and communicate. The access point is typically part of an overall distribution network which is connected to a host computer or entire computer local area network (LAN). The access points and the infrastructure make up the distribution network and allow for communications between the roaming computer devices and the host computer or entire computer local area network (LAN).

A high reliability access point **10** of the present invention includes a central processing unit CPU processor **13** and at least two wireless adapters **15** and **16**. Each of the wireless adapters **15** and **16** include a radio **17** and **18**, a media access control (MAC) processor **19** and **20** and an antenna **21** and **22**, respectively. The radios and antennas are used for RF transmission and reception. The MAC processor controls low level protocol functions including controlling the opera-

tion of the radio, radio channel, error control, e.g., ARQ or Selective Response, and communication with the CPU processor 13. The CPU processor 13 controls the high-level communications protocol functions and controls the interface 25 between the high reliability access point 10 and the infrastructure 26. In a preferred embodiment there is a PCMCIA standard interface between the wireless adapters and the access point.

The distribution network is comprised of all of the access points and the infrastructure which connects all of the access points. A host computer or an entire host network is connected to the distribution network. The distribution network allows computer devices to communicate with the host computer or host network.

The division between what is high level protocol, and thus handled by the CPU processor, and what is low level protocol, and thus handled by the MAC processor, can vary greatly depending upon the intelligence level of the MAC processor. In a preferred embodiment, the infrastructure conforms to an industry standard wired LAN such as Ethernet. The MAC processor can be made very intelligent and therefore capable of handling a great deal of radio specific protocol. On the other hand, the MAC processor can be minimally intelligent and handle only the most basic protocol functions allowing the CPU processor to handle the majority of the protocol functions.

Utilizing multiple wireless adapters in a single access point, as well as incorporating independent intelligence and low level protocol responsibility into each wireless adapter, yields several significant advantages. The examples depicted in FIGS. 1–4 show access points using only two wireless adapters per access point. Utilizing two wireless adapters in the manner discussed below will greatly increase the reliability of a particular access point, as well as increase the reliability of the entire distribution network. Access points could use more than two wireless adapters and the utilization of the multiple wireless adapters would be similar to the implementation describes using only two wireless adapters with addition protocol being required to handle the increased redundancy and to allow for more sophisticated self monitoring.

Referring still to FIG. 1, the CPU processor 13 can designate the RF address to which each wireless adapter 15 and 16 is to respond. The CPU processor 13 can, but need not, assign the same address to each wireless adapter. Therefore, in one configuration, the CPU processor 13 can designate that each of the wireless adapters 15 and 16 respond to the address assigned to that access point 10. Designated as such, both radios 17 and 18 will be operating simultaneously on the same channel. In a frequency hopping system, both radios 17 and 18 would be operating on the same hopping sequence, and be mutually synchronized to that hopping sequence.

Accordingly, the wireless adapters 15 and 16 are configured to receive incoming transmission from roaming computer devices within range. As both wireless adapters 15 and 16 receive the transmission, each adapter can evaluate the quality information to the CPU processor 13. The CPU processor 13 uses the quality information to determine which wireless adapter is receiving the higher quality signal. The CPU processor 13 will then typically choose to receive the incoming transmission on the wireless adapter with the higher signal quality and respond using the same adapter.

The antennas 21 and 22 can be positioned to allow the access point 10 to implement an antenna diversity scheme which will help reduce the negative effects caused by multipath interference. Antenna diversity can be accomplished in various ways. For example, the antennas can be placed sufficiently far apart, typically greater than a quarter wavelength apart, or the antennas can be positioned at a 90 degree angle with respect to each other to create a polarization antenna diversity scheme.

With an antenna diversity scheme in place, the signal from a wireless computer device will be received differently on each antenna due to multipath signal propagation. Therefore, each wireless adapter may receive a signal of a different quality. The CPU processor 13 can choose which wireless adapter to use based upon the quality of the received signal. Each wireless adapter includes the capability of measuring signal quality and only good messages will be forwarded on to the CPU processor 13. The quality can be appended to the message or can be presented to the CPU in a memory register.

Referring now to FIG. 2, another high reliability access point 20 built in accordance with the present invention is shown. In this embodiment, in addition to having an antenna diversity scheme at the access point level, there is an antenna diversity scheme at the wireless adapter level. Each wireless adapter 15 and 16 includes at least two antennas 21 and 23, 22 and 24, respectively positioned to create an antenna diversity scheme. Thus for the wireless adapter 15 the antennas 21 and 23 are either positioned sufficiently far apart, more than a quarter wavelength, or the antennas 21 and 23 are positioned in an asymmetrical or orthogonal manner to provide polarization diversity. The antennas 22 and 24 for the wireless adapter 26 are placed in a similar manner.

In this embodiment, an incoming signal is received on both antennas 21 and 23 of the wireless adapter 15. The MAC processor 19 then determines the quality if the signal coming in on each of the antennas 21 and 23 connected to the wireless adapter 15. Based upon the signal quality information, the MAC processor 19 will choose which of the antennas 21 and 23 to use to receive the incoming transmission. The MAC processor will also forward the signal quality information regarding the selected antenna to the CPU processor 13. The wireless adapter 16 will perform a similar process and forward the signal quality information for its best antenna to the CPU processor 13. The CPU processor 13 can then determine which wireless adapter is receiving the highest quality signal and use that wireless adapter to receive the incoming transmission and respond to the transmitting station.

When a high reliability access point wishes to transmit a message, such as an acknowledgment of a received message, to a roaming computer device, the CPU processor 13 will utilize the received quality signal information to determine which wireless adapter to use to send the message. Likewise, if the wireless adapter is utilizing an antenna diversity scheme it will also select the most appropriate antenna for transmitting a message.

While one of the wireless adapters is transmitting, the other wireless adapter can operate as a promiscuous listener to determine if the correct message is being sent. For example, referring to FIG. 1, if the CPU processor 13 is sending a message to a roaming computer device via wireless adapter 16, wireless adapter 17 can operate in the receive mode and monitor the message being sent by the wireless adapter 16. This provides a local loop back capability and allows the access point to perform self-monitoring. If the CPU processor 13 determines that one of the wireless adapters is not operating correctly, the malfunctioning wireless adapter can be disabled. Additionally, the CPU processor 13 can then send a message to the system

management portion of the host network via the infrastructure **26** that it has a defective wireless adapter and repairs are needed.

Referring again to the configuration in which each of the wireless adapters is listening on the same channel, another advantage achieved by this configuration is the ability to receive two concurrent messages. In an access point that only contains one adapter, this situation will cause a collision and neither message will be received. In a high reliability access point built in accordance with the present invention, it is possible that the one wireless adapter will be able to receive one of the messages while the other wireless adapter receives the other, due to multipath fading at each of the wireless adapter antennas.

Referring now to FIG. **3**, a portion of a distribution network **30** utilizing high reliability access points is shown. The distribution network **30** includes an infrastructure **33** and two high reliability access points **35** and **36**. Access point **35** includes a CPU processor **37** and two wireless adapters **38** and **39**. Access point **36** includes a CPU processor **41** and two wireless adapters **42** and **43**. In the present example, a break **45** in the infrastructure **33** has occurred. Access point **35** is upstream to the break with respect to the host computer network and thus is not immediately affected by the break **45**. However, access point **36** is downstream to the break **45** and therefore is no longer connected to the host computer network.

When a situation like this occurs, the downstream access point **36** will begin attempting to communicate with an upstream access point using wireless communication. In this example, the upstream access point is access point **35**. However, the communication need not be with the access point immediately upstream, the only requirement is that it be with an access point which is upstream with respect to the break. The host computer network or other access points will previously have shared the logistic and address information concerning all of the access points to each access point in the distribution network.

Once communications with an upstream access point **35** is established, each access point **35** and **36** will dedicate one of its wireless adapters **39** and **42**, respectively to provide a wireless repair of the break **45** in the infrastructure **33**. When this happens, the CPU processor for each of the access points will instruct the dedicated wireless adapter to change so that it is no longer operating on the same channel as the other adapter in the access point. A communication channel between access points is established. The dedicated wireless adapters **39** and **42** will no longer be used to transmit or receive information to or from roaming computer devices. However, the non-dedicated wireless adapters **38** and **43** will communicate with the roaming computer devices. Once the top priority of reestablishing communications between all of the access points in the distribution network **30** and the host computer network has been accomplished, the access points can then send a message to the system management portion of the host computer network detailing where the break (or breaks) exists.

It is conceivable that the distribution network could lose its entire infrastructure. In this case, each of the high reliability access points would dedicate one of its wireless adapters to network infrastructure communications while retaining one of its wireless adapters for communication with roaming computer devices. Using the same technique described above, a temporary or remote access point could be established that, intentionally, is not connected to the infrastructure. This configuration is discussed below in greater detail with reference to FIG. **5**. The use of directional gain antennas for the dedicated wireless adapter would allow the temporary or remote access point to be positioned a considerable distance from the infrastructure.

Referring now to FIG. **4**, a high reliability access point **50** with a backup power supply **52** is shown. Typically, the access point will be wired to an external power source **54** such as a wall outlet. However, there is a great desire that if power is lost that the distribution network not shut down since the roaming computer devices will normally not be dependent upon the external power source **54**. In this embodiment of the present invention, the back-up power source **52** is wired in parallel with respect to the external power source **54**. Thus, if the external power source **54** fails, the access point **50** will not lose power.

Referring now to FIG. **5**, a remote access point **70** is shown connecting to the infrastructure **33** by means of dedicated wireless adapters **62** and **72**. The access point **70** is not hard wired to the infrastructure **33**. Therefore, the access point dedicates one of its wireless adapters **72** to network infrastructure communication. The other wireless adapter **74** continues to communicate with roaming computer devices within the range of the access point **70**. An access point **60** that is hard wired into the infrastructure **33** dedicates one of its wireless adapters **62** to network infrastructure communication and establishes a link between the infrastructure **33** and the remote access point **70**. The access point **60** can continue to service the roaming computer devices within its range through the wireless adapter **64**.

The hard wired access point **60** that is used to connect the remote access point **70** to the infrastructure need not be the access point that is physically closest to the remote access point **70**. Use of the directional antenna would allow a remote access point to establish communication with virtually any of the access points that are hard wired to the infrastructure. Additionally, several remote access points could establish wireless infrastructure communication by each dedicating one of their wireless adapters. In this arrangement, only one of the remote access points need be in communication with a wired access point. All other remote access points could establish communication with the host computer network via the remote access point in communication with a wired access point.

FIG. **6** is block diagram illustrating an embodiment of an access point **600** built in accordance with the present invention capable of communicating with wireless devices in its cell on both a first channel and a second channel. The access point **600** thus includes a first radio **616** operating on a first channel and a second radio **608** operating on a second channel. The access point also includes a processing unit **612** and additional circuitry **614**, both of which couple to the first radio **616**, the second radio **608** and a wired Ethernet transceiver through a bus interface **610**. The wired transceiver **606** allows the access point **600** to access a wired LAN backbone **622** to which various other system components may connect. The wired LAN backbone may include, for example, an ethernet network, a token-ring network or an asynchronous transfer mode (ATM) network among other network types. In any such case, the wired transceiver **606** facilitates communication between the access point **600** and devices coupled to the wired LAN backbone **622**.

The blocks illustrated in FIG. **6** are simplified for exemplary purposes, and it will be understood by one skilled in the art that an access point **600** according to the present invention is not limited to the block circuitry shown in FIG. **6**. In another embodiment, the access point **600** may contain additional transceivers for communicating on other channels, over other mediums and in other networks as well.

The first channel radio **616** couples to first antenna **618** while the second channel radio **608** couples to second antenna **620**. The antennas **618** and **620** may either be protruding or non-protruding antennas, depending upon system requirements. The first channel radio **616** and the second channel radio **608** operate independently to form a first communication cell and a second communication cell, respectively. When a radius of the first communication cell substantially equals a radius of the second communication cell, the cells substantially overlay one another. However, when the radii of the communication cells differ, the larger cell fully overlays and extends beyond the smaller cell. The first and second channels may operate using different frequencies, modulation schemes and code spreading schemes. The selections of such operational channel variations depend on overall system constraints, yet should result in two independent channels that do not interfere with one another unacceptably.

The bus interface **610** isolates the processing unit **612** and the additional circuitry **614** of the access point **600** from the operating characteristics of the radios **616** and **608** and the wired transceiver **606**. Thus, communication with any of the transceivers can be accommodated by general circuitry and software routines of the access point **600**. In one embodiment, the bus interface **610** is a PCI bus interface with the first channel radio **616**, second channel radio **606** and wired transceiver compatible with PCI bus standards. However, in other embodiments, differing interface standards may be employed.

In operation, the processing unit **612** is programmed with the network configuration to route communications through the first channel radio **616**, the second channel radio **608** and the wired transceiver **606**. However, roaming portable units may alter the network configuration as they move between cells. Thus, the access point **600** periodically polls devices within its communication cell to update the network configuration. Updates are entered and forwarded for other units in the system.

Incoming messages received via the wired transceiver **606** may be stored, displayed and routed via the first channel radio **616** or routed via the second channel radio **608** to portable data terminals or other wireless devices operating within the cell(s) of one or more of the access point **600**. Similarly, an incoming message on one of the radios **616** or **608** may be stored, displayed, routed through one of the radios **616** or **608** or routed through the wired transceiver **606**, depending upon the message destination and type.

By providing routing within the access point **600** between the first channel radio **616** and the second channel radio **608**, message delivery is expedited. Further, as will be described herein, by providing two radios in various access points, fewer cells may be required to adequately service a premises such as a factory. Moreover, when one of the radios is employed to provide control within a cell while the other radio provides primary communication within the cell, collisions between devices may be eliminated. Still further, when one of the radios provides a deterministic communication path while another one of the radios provides a non-deterministic communication path, data and message transmissions within the network may be controlled to satisfy bandwidth requirements of the various devices within the system. It may be preferable to utilize a deterministic communication path for some types of communications such as telephony video or real-time data transfer, for example. However, when the preferred deterministic path is unavailable for some reason, the alternative non-deterministic path may still be used.

The access point **600** may synchronize transmissions on the first channel radio **616** and the second channel radio **608** to avoid unacceptable conflicts between transmissions on one radio and receipts on the other radio. In this fashion, unacceptable conflicts are minimized.

FIG. 7*a* is a block diagram illustrating an embodiment of a portable data terminal **720** according to the present invention, the portable data terminal having a single PCMCIA card that contains two radios. In particular, the portable data terminal **720** contains terminal circuitry **722** that includes processing circuitry **726**, conventional terminal circuitry **728** and interface circuitry **730**. The interface circuitry **730** provides a PCMCIA interface for receiving PCMCIA cards of various functionality. Terminal circuitry **722** is well known and can be found in conventional portable or hand held computing devices.

Via the interface circuitry **730**, the portable data terminal **720** accepts PCMCIA cards. As illustrated, the PCMCIA card inserted constitutes a communication module **724** that provides wireless access on two channels. Specifically, the communication module **724** comprises processing circuitry **732**, first channel radio **735**, second channel radio **734** and interface circuitry **744**. The first channel radio **735** communicates via first antenna **737** while the second channel radio **734** communicates via second antenna **738**. Configured and operable in this manner, the portable data terminal **720** may communicate with the access point **600** of FIG. **6** on either the first channel or the second channel.

Independent of whether the first channel radio **735** or the second channel radio **734** is used, the processing circuitry **726** delivers and receives data and messages via the interface circuitry **730** in the same manner and format, i.e., the interface circuitry **730** supports a common communication interface and protocol. The processing circuitry **732** of the communication module **724** receives data and messages via the interface circuitry **744**. The processing circuitry **732**, including a DSP **742**, participates to assist in wireless communication via both the first channel radio **735** and the second channel radio **734**. Thus, the module **724** not only saves on PCMCIA slots, but also saves costs and increases reliability by sharing common circuitry resources. In particular, the first channel radio **735** and second channel radio **734** share the interface circuitry **744** and processing circuitry **732** which includes the DSP **742**. In another embodiment of the portable data terminal **720**, a PCMCIA compatible wired network adapter could be installed which would also share some of the common circuitry resources.

FIG. 7*b* is a block diagram illustrating an alternative embodiment of a portable data terminal **748** that receives a single PCMCIA card having a radio **750** that includes two separate radio units. As contrasted to the dual radio design of the portable data terminal **720** of FIG. 7*a*, the radio **750** of the portable data terminal **748** of FIG. 7*b* operates on both the first channel and the second channel. The radio **750** is coupled to antenna **756** and controlled by processing circuitry **752** that includes digital signal processing circuitry **754**. The radio **750** includes a first radio unit operable on the first channel and a second radio unit operable on the second channel with the radio units sharing some common components.

The processing circuitry **752** may control operation of the radio **750** in a simplex fashion such that the radio **750** operates on the first channel as required and operates on the second channel as required. Because the radio **750** may includes circuitry shared by the radio units, the radio **750** may only operate on one channel at a given time. By multiplexing its operation over time, however, the radio **750**

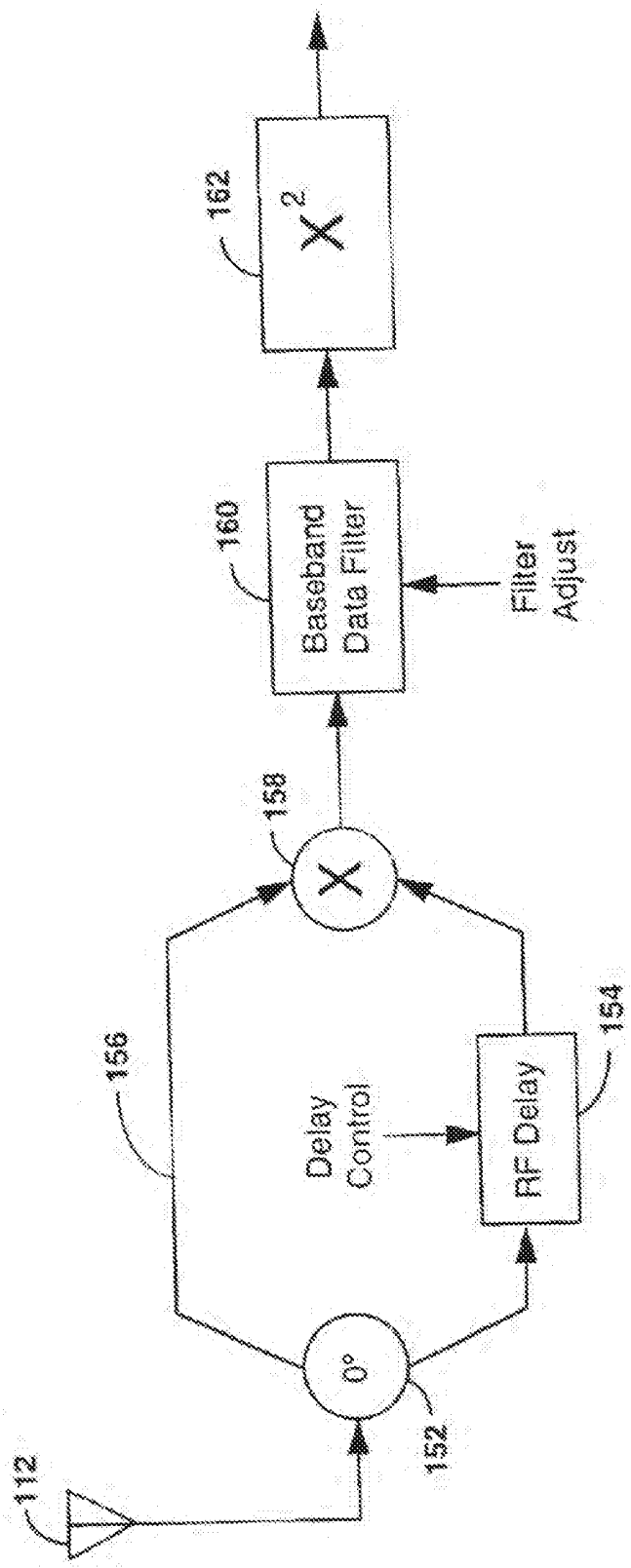
112
0°
152
156
Delay Control
RF Delay
154
158
Baseband Data Filter
160
Filter Adjust
X^2
162

FIG. 12

provides sufficient coverage on the channels at a reduced cost. Other components of the portable data terminal of FIG. 7*b* were previously described with reference to FIG. 7*a* and will not be further described herein.

FIG. **8** is a block diagram illustrating an alternative embodiment of a portable data terminal **800** according to the present invention, the portable data terminal **800** having a single PCMCIA card that contains a multi-channel (or multi-mode) wireless transceiver **739** and a wired network interface **736** (or modem transceiver). The portable terminal **800** includes terminal circuitry **722** and a module **802** including various components previously described with reference to FIG. 7*a*. The terminal circuitry **722** includes processing circuitry **726**, conventional terminal circuitry **728** and interface circuitry **730**. The communication module **802** includes processing circuitry **732**, the multi-mode wireless transceiver **739**, the wired modem transceiver **736** and interface circuitry **744**. When in use, the wired modem transceiver **736** interfaces via a jack **740** to a telephone line (not shown). Similarly, the wireless multi-mode transceiver **739** communicates via an antenna **741**.

The processing circuitry **732** of the communication module **802** receives data and messages via the interface circuitry **744**. If the modem transceiver **736** is being used, the processing circuitry **732** appropriately (de)segments and (de)compresses the data/messages utilizing a digital signal processor (DSP) **742**. Otherwise, the processing circuitry **732**, including the DSP **742**, participate to assist in wireless communication via the multi-mode transceiver **739**. Thus, the module **802** not only saves on PCMCIA slots (as required when a conventional radio card and a conventional modem card are both being used), but also saves costs and increases reliability by sharing common circuitry resources.

The multi-mode transceiver **739** is frequency tunable and may operate in various modes, such as those that may be used with a frequency spreading scheme such as those described in U.S. Pat. No. 5,425,051 issued Jan. 13, 1995 to Ronald L. Mahany, which is incorporated herein by reference. Thus, the multi-mode transceiver **739** may operate on both the first channel and the second channel and communicate with the access point **600** of FIG. **6** on either the first channel or the second channel. As will be further described herein, operation on differing channels may be employed to reduce installed system component requirements, to alleviate various potential interfering operating conditions and to more efficiently route data and messages within the wireless local area network.

FIG. **9** is a diagram illustrating a communication system **900** built and operating according to the present invention. The communication system includes an access point **902** operating on two channels and access points **904** and **906** operating on a single channel. Each of the access points **902**, **904** and **906** connects to a wired LAN backbone **908** to facilitate wired communication between the access points and computer systems **910** and **912** connected to the wired LAN backbone **908**.

Access point **902** includes both a first channel radio and a second channel radio. In the embodiment illustrated, the first channel radio creates a first channel cell **930** extending with a first channel radius about the access point **902**. The second channel radio of the access point **900** creates a second channel cell **932** extending with a second channel radius about the access point **902**. As illustrated, the second channel cell **932** has a larger radius than the radius of the first channel cell **930**. To create the relatively larger cell, the second radio may operate at a higher power, operate at a lower data rate or operate in another differing manner to create the relatively larger cell.

Access points **904** and **906** generate first channel cells **934** and **936**, respectively. Portable data terminals **920**, **922**, **924** and **926** and scanning unit **918** communicate with the various access points **902**, **904** and **906** and roam about the communication system **900**, potentially moving from cell to cell. Other devices, such as stationary printers **914** and **916** typically remain within one cell of the communication system **900**. In the embodiment illustrated, portable data terminals **920** and **926** include multi-mode radios while portable data terminals **922** and **924** include both a first channel radio and a second channel radio. However, in other embodiments, some of the portable data terminals may only on one of the channels.

As illustrated, terminal **922** includes a first channel antenna **940** and a second channel antenna **942** while access point **902** includes both a first channel antenna **944** and a second channel antenna **946**. Thus, whenever the terminal **922** roams within the second channel cell **932**, the terminal **922** communicates via a second channel radio and second channel antenna **942**. Further, terminal **950** may communicate with access point **902** on the first channel via its first channel antenna **954** when resident within the first channel cell **903**. Finally, terminal **952**, having a single radio operable the first channel via antenna **956** may communicate with access point **902** on the first channel when resident within the first channel cell **932**.

As shown, portable data terminal **922** resides both within the first channel cell **930** and the channel cell **932** generated by access point **902**. Thus, the portable data terminal **922** may communicate with access point **902** on either the first channel or the second channel. However, printer **916** and scanning unit **918** reside only within the second channel cell **932** generated by access point **902** and must communicate with the access point **902** on the second channel.

Print data originating at computer **910** and intended for printer **916** travels from computer **910**, through the wired LAN backbone **908** to access point **902** and across first channel cell **932** to the printer **916**. During this transmission, the data is routed through the wired LAN backbone and the wireless network based upon the network locations of the computer **910** and the printer **916**. The combination of these segments forms a unique network path. However, a message moving from portable data terminal **926** to portable data terminal **922** may be routed along two different network paths. While both network paths include access point **906**, wired LAN backbone **908** and access point **902**, one network path includes first channel cell **930** while the other network path includes second channel cell **932**. Thus, depending upon system conditions and the system configuration, the message is routed via one of the two network paths. Such conditions may include cell traffic, required data rates and other factors.

FIG. **10** is a diagram illustrating a communication system **1000** built and operating according to the present invention wherein one of the access points routes communication between two portable terminal units operating on different channels within its cell. In the communication system **1000**, both a first access point **1002** and a second access point **1004** include both first and second channel radios. The first access point **1002** generates a first channel cell **1006** and a second channel cell **1008** within which portable data terminals **1012** and **1014** operate. Further, second access point **1004** generates a first channel cell **1010** and a second channel cell **1011** within which portable data terminals **1012** and **1014** may operate. In the embodiment, the system **1000** prefers to

route communication on the first channel due to its characteristics although the portable data terminals may operate on either channel.

As illustrated, portable data terminal **1012** resides within both the first channel cell **1006** and the second channel cell **1008** generated by access point **1002**. However, portable data terminal **1014** resides only within the second channel cell **1008** of the access point **1002**. Thus, in the transmission of a message from portable data terminal **1012** to portable data terminal **1014**, access point **1002** receives the message from portable data terminal on the first channel radio and transmits the message to portable data terminal **1014** on the second channel. With reference to FIG. **6**, the processing unit **612** receives the message via the first channel radio **616** across the bus interface **610**. The processing unit **612** determines the destination of the message, and routes the message back across the bus interface **610** to the second channel radio **608** that transmits the message to portable data terminal **1014**. Access point **1004** also provides multiple channel routing of messages between portable data terminals **1016** and **1018**.

Without the multiple channel communication capabilities of the communication system **1000**, an additional access point **1020** having a first channel cell **1022** would be required to facilitate communication with portable data terminals **1014** and **1018**. The cost of such an additional access point **1020** would not only include the cost of the access point **1020** itself but the expense of connecting the access point **1020** to the wired LAN backbone **908** and AC power. The cost of such addition would far exceed the cost of the second channel radios in access points **1002** and **1004**. Furthermore, in some installation, extensions of the wired LAN backbone **908** are not possible. Even if such access point **1020** were installed, the exemplary communication would require routing of messages between portable data terminal **1012** and **1014** across the wired LAN backbone **908**. Such additional loading slows operation of the wired LAN backbone **908** and decreases system performance.

FIG. **11** is a block diagram illustrating an embodiment of a communication system **1100** according to the present invention wherein an access point **1102** uses a dedicated control/busy channel transmitter **1114** operating on a busy/control channel to manage transmissions between the access point **1100** and a plurality of roaming portable data terminals **1104** and **1106** within its cell. The communication system may also contain wired communication to a wired Ethernet backbone LAN **908**.

The access device **1102** includes control circuitry **1120**, a data transceiver **1118**, a busy/control transmitter **1114** and antennas **1115** and **1117**. The data transceiver **1117** supports communication on a communication channel (first channel) between the access point **1102** and wireless network devices operating within range of the access point, such as the portable data terminals **1104** and **1106**. Further, the busy/control transmitter **1114** supports transmissions on the busy/control channel (second channel). The Ethernet transceiver **1115** supports communication between the backbone LAN **908** and the control circuitry **1120**.

Portable data terminals **1104** and **1106** include terminal circuitry **1112**, a data transceiver **1108** that communicates on the communication channel via antenna **1109** and a busy/control receiver **1110** that receives busy/control information via antenna **1111**. As previously described, the communication channel and the busy/control channel are non-convergent and may operate concurrently in a single area or location. However, the access point **1102** must operate so as not to interfere with incoming transmissions by concurrently initiating a transmission. Thus, in one embodiment, transmissions on the communication channel and the control/busy channel are synchronized to prevent such conflicts.

The access point **1102** employs the busy/control transmitter **1114** to control operations within the first wireless network cell. In one embodiment, the access point **1102** periodically transmits control parameters that the portable data terminals **1104** and **1106** use to synchronize with communications on the communication channel. For example, with the data transceiver of the communication channel operating in a spread spectrum mode, the busy/control transmitter **1114** transmits code spreading sequences, frequency hopping parameters and other operating parameters that allow the portable data terminals **1104** and **1106** to communicate within the cell on the communication channel. Such control information may be intermittently transmitted by the access point **1102** or may be continuously transmitted.

Additionally, the access point **1102** transmits a busy signal on the busy/control transmitter **1114** to authorize communication within the cell. To prevent portable data terminal **1104**, for example, from transmitting while portable data terminal **1106** is communicating with the access point **1102**, the access point **1102** transmits a busy signal on the busy/control channel using the busy/control transmitter **1114**. The portable data terminal **1104** receives the busy signal and does not transmit information while such busy signal is active, perhaps entering a sleep mode instead and waking up periodically to determine availability. The busy signal may include a continuous transmission or periodic transmission. However, in both embodiments, portable data terminals **1104** and **1106** listen with their respective control/busy receivers **1110** prior to initiating communication with the access point **1102**. Thus, upon roaming into range of the wireless access device **1102**, the portable data terminals **1104** do not interfere with ongoing communication.

FIG. **12** is a drawing illustrating advantageous operation of the access device and portable data terminals of FIG. **11** when two roaming terminals encounter hidden terminal conditions. In particular, each of the portable data terminals **1208** and **1212** is configured to listen on the busy/control channel and to communicate on the communication channel only when the communication channel is clear (available). In this configuration, when no desire to communicate is present, the portable data terminals **1208** and **1212** need only occasionally check the busy/control channel to identify any outstanding messages or communication requests as transmitted by the access device **1202**. If either portable data terminal **1208** or **1212** desires to participate on the communication channel (to initiate communication or to respond to awaiting messages or communication requests), that terminal need only monitor the busy/control channel long enough to identify that the communication channel is clear before responding to a poll on the communication channel. As before, the wireless access device **1202** may also periodically identify the communication channel mode and associated parameters as selected and reselected by the wireless access device **1202**.

To fully appreciate this process, first assume that the portable data terminals **1208** and **1212** are not within range of the wireless access device **1202**. Upon wandering within range of the access device **1202**, the portable data terminal **1212** begins listening for transmissions on a busy/control channel. Within some time period thereafter, the access device **1202** participates on the busy/control channel to transmit current channel conditions and optionally, the currently selected communication channel definition (i.e., mode and parameters) and/or pending message and communica-

tion request indicators. After identifying a need to participate, the portable data terminal **1212** awaits a transmission from access device **1202** (on the busy/control channel) that the selected communication channel is clear (not in use). When the channel is clear, the portable data terminal **1212** begins participating thereon.

Second, assume that, while the portable data terminal **1212** is engaged in ongoing communication with a computing device **1206** on a backbone LAN **908** via the access device **1202**, the portable data terminal **1208** comes within range of the access device **1202** and desires to participate on the communication channel. The portable data terminal **1208** adapts itself to participate on the busy/control channel and identifies, in periodic transmissions from the access device **1202**, that the communication channel is busy. Thus, the portable data terminal **1208** must monitor the busy/control channel to identify when the communication channel is clear before participating on the communication channel.

This operation works whether or not the portable data terminals **1208** and **1212** are within range of each other. In particular, portable data terminal **1208**, portable data terminal **1212** and access device **1202** have transmission ranges illustrated by dashed circles **1210**, **1214** and **1204**, respectively. Although both portable data terminals **1208** and **1212** are within range of the access device **1202**, neither are in range of each other and, thus, are referred to as "hidden" from each other. The access device **1202** is within range of both of the portable data terminals **1208** and **1212**. If the portable data terminal **1208** attempted to transmit on the communication channel while the portable data terminal **1212** was transmitting, a collision would occur at the wireless access device **1202**. However, this is not the case because both of the portable data terminals **1208** and **1212** must receive a communication channel clear indication on the busy/control channel from the access device **1202** that is in range of both, avoiding the hidden terminal problem. When participation is completed on the communication channel, the portable data terminals **1208** and **1212** resume monitoring of the busy/control channel.

Participation by the access device **1202** on the busy/control channel need only be by transmitting, although receiving might also be employed in case the busy/control channel is to be shared. Similarly, participation by the portable data terminals **1208** and **1212** need only be by receiving transmissions, although transmitting might also be employed. In particular, transmission might be employed by a wireless terminal on the busy/control channel if the wireless terminal does not support the currently selected communication channel, i.e., does not support the mode and associated parameters.

FIG. **13** is a block diagram illustrating an alternate embodiment of the communication system **1300** of the present invention wherein an access point **1302** includes a dedicated control/busy channel transceiver **1310** and roaming data terminals **1304** communicate with the access point **1302** using either frequency nimble multi-channel transceivers **1305** or a dedicated control/busy channel transceiver **1326**. Thus, the communication system **1300** facilitates bi-directional communication on the busy/control channel so that the access point **1302** may optimize operation of the system **1300**.

In addition to the busy/control transceiver **1310** coupled to antenna **1314**, the access point includes control circuitry **1306**, a data transceiver **1312** coupled to antenna **1316** that facilitates wireless communication on the communication channel and an Ethernet transceiver **1308** that couples the access point **1302** to the backbone LAN **908**. Portable data terminal **1304** includes terminal circuitry **1112** and a multi-mode/multi-channel transceiver **1305** that allows the portable data terminal **1304** to communicate both on the busy/control channel and the communication channel. Portable data terminal **1320** includes terminal circuitry **1322**, a busy/control transceiver **1324** coupled to antenna **1330** that allows the portable data terminal **1320** to communicate on the busy/control channel and a data transceiver **1326** coupled to antenna **1328** that allows the portable data terminal to communicate on the communication channel.

Having separate radio units and antennas, the access device **1302** participates on: 1) a selected communication channel, servicing data exchanges in the communication network cell; and 2) the busy/control channel defined by predetermined mode and parameter information known to all wireless transmitters, controlling access to the selected communication channel. Such participation is often simultaneous, preventing a portable data terminal **1304** or **1320** from having to wait long on the busy/control channel for a transmission. Within a predefined maximum time period, the portable data terminal **1304** or **1320** receives transmissions from the access device **1302** identifying currently selected communication channel mode and associated parameters, should such be required. The access device **1302** periodically broadcasts such information on the busy/control channel to capture terminals that happen to need communication channel definitions (e.g., selected mode and parameters) to participate. The portable data terminal **1304** utilizes the identified mode and associated parameter information to switch the multi-mode transceiver **1305** over to the selected communication channel and begins participation thereon. Portable data terminal **1320** may also alter the operation of the data transceiver **1326** based upon the receipt from the access point **1302**.

In operation, the wireless terminal **1304** participates on the busy/control channel except when it has a need to gain access to the selected communication channel. Thus, its operation in the system **1300** is satisfactory. By including only the terminal circuitry **1112** and one radio, the portable data terminal is less costly than the multi-radio portable data terminal **1320**. However, because the wireless terminal **1320** includes two radios, the portable data terminal **1320** may place the data transceiver **1326** in a low power state, and only power up the busy/control channel transceiver **1324** to check in. Thus, portable data terminal **1320** may consume less power that portable data terminal **1304**.

FIG. **14***a* is a block diagram illustrating a communication system **1400** according to the present invention wherein an access point **1402** and portable data terminals **1404** and **1406** operate on a deterministic first channel and a non-deterministic second channel and the system **1400** routes communications on the channels based upon system conditions and/or the requirements of a particular communication. To carry out such functionality, the access device **1402** may comprise control circuitry **1408**, a wired LAN transceiver **1410** and either a single, configurable transceiver (for operating on both the deterministic and non-deterministic channels, not shown) or a single transceiver **1412** coupled to antenna **1413** for operating on the deterministic channel and a single transceiver **1414** coupled to antenna **1415** for operating on the non-deterministic channel.

In one embodiment, the deterministic channel allocates a particular communication bandwidth to each wireless device requiring communication, perhaps in a polled, token passing or time slotted implementation. Such operation may be required where many wireless devices reside within a single cell and compete for communication with the access point

1402. In the embodiment, the access point 1402 also allows all devices within the cell to compete for available bandwidth on the non-deterministic channel. However, the access point 1402 may provide overrides to dynamically reallocate bandwidth in the deterministic channel and to assign bandwidth on the non-deterministic channel as may be required for the particular operating conditions.

With a single multi-mode transceiver 1418 coupled to antenna 1419 controlled by terminal circuitry 1416, the portable data terminal 1404 operates on either the deterministic channel or the non-deterministic channel at any time. Alternatively, portable data terminal 1406 having terminal circuitry 1420, a deterministic transceiver coupled to antenna 1425 and a non-deterministic transceiver 1422 coupled to antenna 1423 communicate on both the deterministic channel and non-deterministic channel simultaneously.

Independent of their differing constructions, the portable data terminals 1404 and 1406 may determine which channel to operate upon. During data transfer operations wherein data transfer rates are not critical, portable data terminal 1404 may determine that the deterministic channel provides sufficient bandwidth. In that case, the portable data terminal 1404 configures its multi-mode transceiver 1418 to operate on the deterministic channel. However, during voice message transfer operations, the portable data terminal 1404 may determine that the bandwidth of the deterministic channel is not satisfactory. In that case, the terminal circuitry 1404 would configure the multi-mode transceiver 1418 to operate on the non-deterministic channel.

FIG. 14b is a diagram illustrating a communication system 1450 according to the present invention that facilitates both wired and wireless communications. The communication system 1450 includes a wired backbone 1452 and at least one access point 1456 that supports communication over a deterministic, time bounded first wireless channel and a non-deterministic, contention access second wireless channel. Along with the access point 1456, the communication system 1450 may also include a PBX (Private Broadcast Exchange) system 1454, one or more of a computer 1454, and other typical wired network devices interconnected by the wired backbone 1452. Additionally, the communication system 1450 comprises a plurality of wireless network devices, such as wireless terminals 1470, 1472 and 1474, which may be portable hand-held devices, mobile computing devices, laptop computers, wireless peripherals, etc.

Communication upon the wired backbone 1452 may be accomplished according to various communication techniques. In one embodiment, communication upon the wired backbone 1452 occurs via an STM (Synchronous Transfer Mode) protocol wherein the wired backbone 1452 serves as an STM backbone. With the STM protocol, a particular bandwidth is provided for each communication link established between a sending and a receiving device attached to the wired backbone 1452.

In another embodiment, communication upon the wired backbone 1452 is carried out using an ATM (Asynchronous Transfer Mode) protocol in which bandwidth between a sending and a receiving device on the wired backbone 1452 is adjusted based upon immediate communication requirements. In such operation, the wired backbone 1452 serves as an ATM backbone. Operation according to the ATM protocol allows for variations in data transmission bandwidths as is immediately required but that provides an average bandwidth over time.

The at least one access point 1456 provides a link between the wireless and wired communications within the communication system 1450. The access point 1456 includes a time bounded adapter 1458 connected to an antenna 1460 which provides wireless communication on the deterministic, time bounded first wireless channel governed by a first wireless protocol. The access point 1456 also includes a contention adapter 1462 connected to an antenna 1464 which provides wireless communications on the non-deterministic, contention access second wireless channel governed by a second wireless protocol. Alternatively, part or all of the circuitry underlying the adapters 1458 and 1462 may be combined into a single unit to share common underlying functionality.

The wireless network device 1470 includes either a dual purpose transceiver or two transceivers for communicating on the first and second wireless channels via the first and second wireless protocols, respectively. A transceiver in the wireless network device 1472 only supports communication on the second wireless channel pursuant to the second wireless protocol. Likewise, a transceiver in the wireless network device 1474 supports communication on the first wireless channel pursuant to the first wireless protocol. For example, the wireless network device 1474 might comprise a portable phone unit operating using, e.g., PCS (Personal Communication Service) or other telephony protocol as the first wireless protocol.

Although direct communication is possible, to manage the first wireless channel, the at least one access point 1456 relays wireless communication between the wireless network devices 1470 and 1474 if both participate on the first wireless channel. If the at least one access point 1456 is the only access point involved that services the two devices 1470 and 1474, such relaying need not involve the wired protocol on the backbone 1452. If the device 1470 happens to communicate via the second wireless channel, the access point 1456 internally translates and relays communications between the devices 1470 and 1474. Similarly, if the device 1470 intends to communicate with a wired network device using either the first or second wireless protocol, the access point 1456 utilizes the first or second wireless protocols, respectively, to communicate with the device 1470. The access point 1456 also communicates with the target wired network device, e.g., the computer 1454, via the wired communication protocol. Relaying between the wired and wireless channels also requires translation.

If more than one access point is coupled to the wired backbone 1452, for example, to support many more wireless network devices, roaming wireless network devices and/or extended coverage regions, the access points only utilize wired backbone bandwidth if necessary. Each access point attempts to minimize external bandwidth (of wired and wireless channels) by preferring internally performed relaying and, when needed, translation (between the first and second wireless protocols, or between the wired protocol and either the first or the second wireless protocol).

The PBX system 1454 connects the wired backbone 1452 through a switched telephone network to other communication systems such as the system 1452. This facilitates communications between all wireless and wired network devices, such as the computer 1454, the device 1470 and remote network devices (devices) connected elsewhere to the switched telephone network. In circuit switched applications, a VLAN (virtual local area network) can be established between wired and wireless network devices coupled to the wired backbone 1452. Such coupling also includes remote network devices coupled via the PBX system 1454.

FIG. 15 is a diagram illustrating the access point 1402 and portable data terminals 1404 and 1406 of FIG. 14a wherein a system 1500 routes various transmissions according to

system conditions such as channel activity, data type and data priority. In the system **1500**, access point **1402** forms cell **1512** while access point **1504**, operating on only a single channel, forms cell **1514**. Thus, while access point **1402** must determine how to allocate wireless communications among the deterministic channel and non-deterministic channel in its cell **1512**, access point **1504** routes all communications on its only channel.

In a first example of the operation of the system **1500**, data from computer system **1502** is transmitted to portable data terminal **1406**. The computer system **1502** transmits the data through the wired LAN backbone **908** to the access point **1402**. The access point **1402**, having a deterministic transceiver **1412** and a non-deterministic transceiver **1414**, routes the data through one of the transceivers. Based upon the type of data, the quantity of data, the rate at which data may be passed on either channel, the amount of traffic on the channels and other conditions, the control circuitry **1408** in the access point **1402** routes the data on either the non-deterministic channel via the non-deterministic transceiver **1414** or on the deterministic channel via the deterministic transceiver **1412**. In the present example, the data to be transferred has a relatively low priority and the access point routes the data on the deterministic channel to the portable data terminal **1404**. Likewise, print jobs from the computer **1402** to the printer **1510** would also have relatively low priority and be transmitted via the non-deterministic channel.

Next, consider data transmissions from scanner **1508** to computer system **1502**. During operation, the scanner transmits an image to the computer system **1502** for decoding and the computer system **1502** returns decoded information at which point the scanner ceases scanning. Rapid transmission between the scanner **1508** and the computer system **1502** reduces the time within which the scanner **1508** performs scans. Thus, rapid transmissions may reduce energy consumption in the scanning process that drains battery life of the scanner **1508**. Thus, the scanner **1508** and access point **1402** both attempt to transmit data on the non-deterministic channel at a relatively higher data transfer rate. However, if the non-deterministic channel is unavailable, the transmission on the deterministic channel may be satisfactory.

In the case of a voice message transmission from portable data terminal **1506** in cell **1514** to portable data terminal **1404** in cell **1512**, transmission on the deterministic channel may be unsatisfactory. Thus, upon an incoming voice message transmission, the access point **1402** may reallocate the deterministic channel allocating additional bandwidth for the voice message. In an alternative operation, the access point **1402** may interrupt communication on the non-deterministic channel and transmit the voice message to the portable terminal unit **1404** on the non-deterministic channel. Thus, in the mode of operation of the system **1500** modifies its operation to provide sufficient bandwidth for the voice message.

In view of the above detailed description of the present invention and associated drawings, other modifications and variations will now become apparent to those skilled in the art. It should also be apparent that such other modifications and variations may be effected without departing from the spirit and scope of the present invention as set forth in the claims that follow.

What is claimed is:

1. A communication module for establishing communications with a wired link, the communication module comprising:

processing circuitry operating to send and receive data according to a first protocol; and

interface circuitry operable to:

receive data from the processing circuitry according to the first protocol;

send data to a plurality of wireless transceivers operating on independent wireless communication channels, according to at least a second protocol independent of the first protocol;

send data to a wired transceiver operating on the wired link,

according to a third protocol independent of the first and second protocols;

receive data from the plurality of wireless transceivers according to at least the second protocol independent of the first protocol;

receive data from the wired transceiver according to the third protocol independent of the first and second protocols; and

send data to the processing circuitry according to the first protocol.

2. The communication module of claim **1**, wherein said communication module is adapted for coupling to computer interface circuitry.

3. The communication module of claim **1**, wherein said communication module is adapted for insertion into a computing device.

4. The communication module of claim **1**, wherein the second and third protocols are the same and comply with PCI bus standards.

5. The communication module of claim **1**, wherein the processing circuitry is programmed with a network configuration to selectively route data through the interface circuitry to the plurality of wireless transceivers and the wired link.

6. The communication module of claim **1**, further comprising at least one acceptor for modularly receiving the plurality of wireless transceivers.

7. The communication module of claim **6**, wherein the plurality of transceivers are carried by at least one PCMCIA card.

8. The communication module of claim **1**, wherein the plurality of wireless transceivers operate independently to form a plurality of communication cells.

9. The communication module of claim **8**, wherein the plurality of communication cells are formed by the plurality of wireless transceivers operating at different data rates.

10. The communication module of claim **8**, wherein the plurality of communication cells are formed by the plurality of wireless transceivers operating at different power levels.

11. The communication module of claim **1**, wherein the independent wireless communication channels are differentiated by a characteristic selected from the group consisting of frequencies, modulation schemes and code spreading schemes.

12. A communication module for establishing communications with a wired link, the communication module comprising:

an interface system for modularly receiving a plurality of wireless transceivers for operating on independent wireless communication channels;

interface circuitry operable to communicate with wireless transceivers modularly received via the interface system; and

processing circuitry coupled to the interface circuitry to control communications effected by wireless transceivers modularly received via the interface system.

13. The communication module of claim **12**, wherein said communication module is adapted for coupling to computer interface circuitry.

14. The communication module of claim 12, wherein said communication module is adapted for insertion into a computing device.

15. The communication module of claim 12, wherein the interface system is configured to receive a plurality of cards each carrying at least one of the plurality of wireless transceivers.

16. The communication module of claim 12, wherein the plurality of wireless transceivers carried by the plurality of cards have substantially different operating characteristics.

17. The communication module of claim 12, further comprising a wired transceiver that operates on the wired link, and wherein:

the interface system comprises a PCMCIA interface capable of modularly receiving a plurality of wireless transceivers for operating on independent wireless communication channels;

the interface circuitry comprises interface circuitry operable to communicate with wireless transceivers modularly received via the PCMCIA interface and with the wired transceiver; and

the processing circuitry comprises processing circuitry coupled to the interface circuitry to control communications by the wireless transceivers modularly received via the PCMCIA interface and by the wired transceiver.

18. The communication module of claim 17, wherein said communication module is adapted for coupling to computer interface circuitry.

19. The communication module of claim 17, wherein said communication module is adapted for insertion into a computing device.

20. The communication module of claim 17, wherein the interface circuitry comprises a PCI bus interface for communicating with the wireless transceivers modularly received via the PCMCIA interface and with the wired transceiver according to PCI bus standards.

21. The communication module of claim 17, wherein the processing circuitry is programmed with a network configuration to selectively route data through the interface circuitry to the plurality of wireless transceivers and the wired link.

22. The communication module of claim 17, wherein the plurality of wireless transceivers operate independently to form a plurality of communication cells.

23. The communication module of claim 22, wherein the plurality of communication cells at formed by the plurality of wireless transceivers operating at different data rates.

24. The communication module of claim 22, wherein the plurality of communication cells are formed by the plurality of wireless transceivers operating at different power levels.

* * * * *

UNITED STATES PATENT AND TRADEMARK OFFICE

CERTIFICATE OF CORRECTION

PATENT NO. : 7,107,052 B2
APPLICATION NO. : 10/648707
DATED : September 12, 2006
INVENTOR(S) : Ronald L. Mahany

It is certified that error appears in the above-identified patent and that said Letters Patent is hereby corrected as shown below:

Column 21, line 8 delete "12" and insert --15--.
Column 22, line 20 delete "at" and insert --are--.

Signed and Sealed this

Ninth Day of January, 2007

JON W. DUDAS
Director of the United States Patent and Trademark Office

Exhibit H

US005546397A

United States Patent [19]

Mahany

[11] Patent Number: 5,546,397

[45] Date of Patent: Aug. 13, 1996

[54] **HIGH RELIABILITY ACCESS POINT FOR WIRELESS LOCAL AREA NETWORK**

[75] Inventor: **Ronald L. Mahany**, Cedar Rapids, Iowa

[73] Assignee: **Norand Corporation**, Cedar Rapids, Iowa

[21] Appl. No.: **238,180**

[22] Filed: **May 4, 1994**

Related U.S. Application Data

[63] Continuation-in-part of Ser. No. 197,392, Feb. 16, 1994, abandoned, which is a continuation-in-part of Ser. No. 170,121, Dec. 20, 1993, abandoned.

[51] **Int. Cl.**[6] **H04B 7/04**

[52] **U.S. Cl.** **370/85.1**; 375/347; 455/52.1; 455/101; 455/133; 455/272

[58] **Field of Search** 455/52.1, 52.2, 455/53.1, 54.1, 56.1, 101, 103, 132, 133, 271, 277.1, 277.2; 370/18, 26, 37, 85.1, 85.3, 95.1, 95.3; 371/68.2; 375/260, 285, 347; 359/113, 152, 164, 167

[56] **References Cited**

U.S. PATENT DOCUMENTS

5,097,484	3/1992	Akaiwa	455/101
5,164,942	11/1992	Kamerman et al.	455/277.1
5,181,200	1/1993	Harrison	455/54.2
5,268,933	12/1993	Averbuch	455/101
5,321,542	6/1994	Freitas et al.	359/152
5,390,166	2/1995	Rohani	370/95.3
5,410,740	4/1995	Hagström	455/54.1
5,410,752	4/1995	Scholefield	455/54.1
5,465,392	11/1995	Baptist et al.	455/55.2

Primary Examiner—Benedict V. Safourek
Attorney, Agent, or Firm—Henderson & Sturm

[57] **ABSTRACT**

A high reliability access point for RF communications in a wireless local area network. The high reliability access point includes a central processing unit (CPU) for handling high level protocol functions and for interfacing with the infrastructure of the local area network. The high reliability access point also includes at least two wireless adapters. Each wireless adapter includes a radio, a media access control (MAC) processor for handling low level protocol functions, and at least one antenna. The multiple wireless adapters allow the access point to perform self monitoring, reduce the effects of multipath interference, reduce some occurrences of collisions at the access point and provide infrastructure backup in the event of an infrastructure failure. The access points also allow for wireless network infrastructure communication for connection of one or more remote access points to the infrastructure. A backup power supply for the access point is also shown.

21 Claims, 5 Drawing Sheets

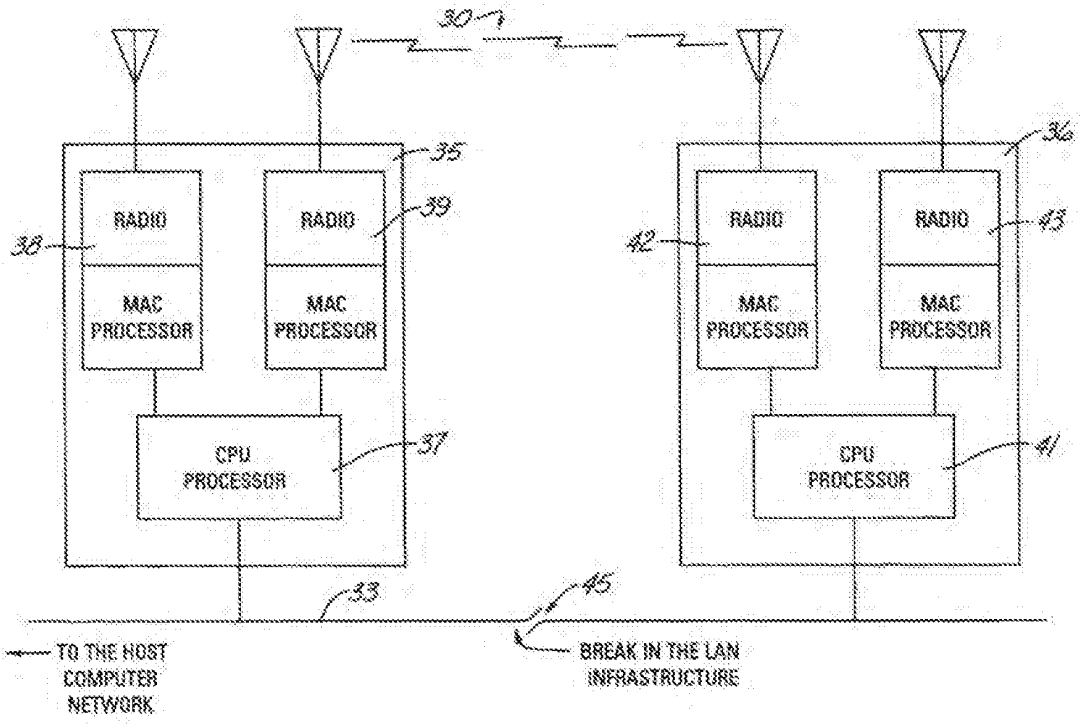

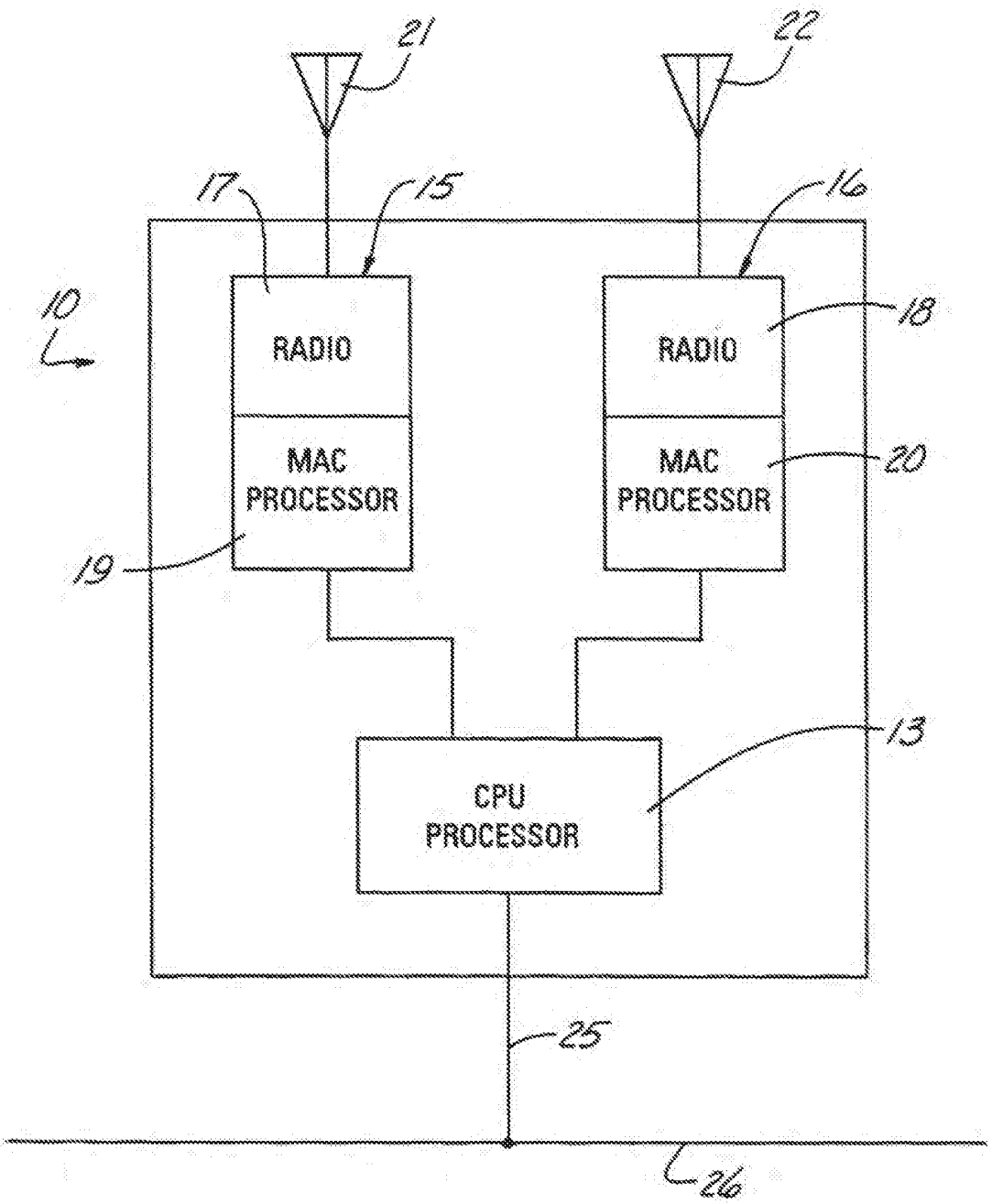
21
22
17
15
16
10
RADIO
RADIO
18
MAC PROCESSOR
MAC PROCESSOR
20
19
13
CPU PROCESSOR
25
26

Fig. 1

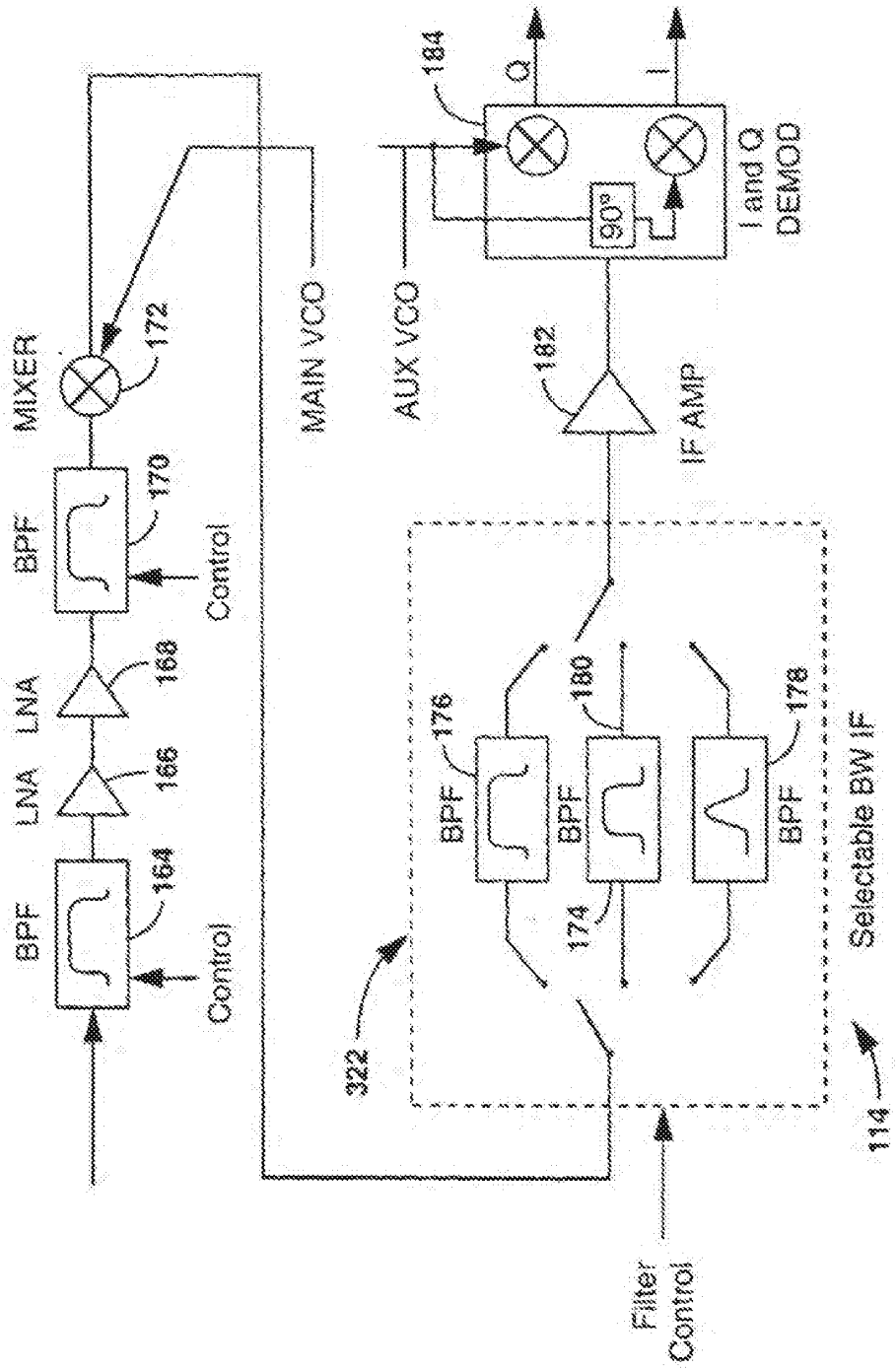
BPF
164
Control
LNA
166
LNA
168
BPF
170
Control
MIXER
172
MAIN VCO
AUX VCO
184
Q
I
90°
I and Q
DEMOD
182
IF AMP
322
BPF
176
BPF
180
174
BPF
178
Selectable BW IF
114
Filter
Control

FIG. 13

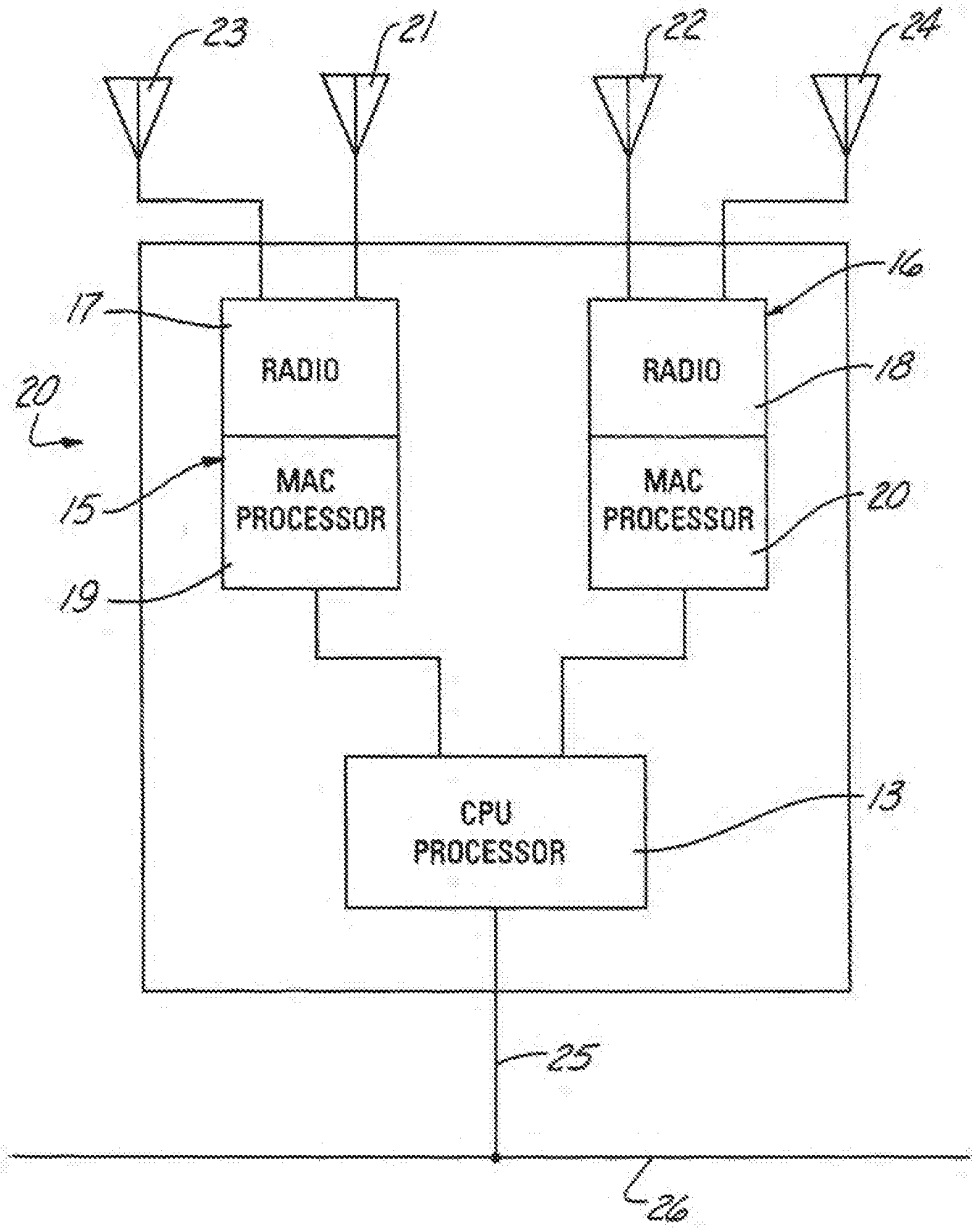
23
21
22
24
16
17
RADIO
RADIO
18
20
MAC PROCESSOR
MAC PROCESSOR
15
20
19
CPU PROCESSOR
13
25
26

Fig. 2

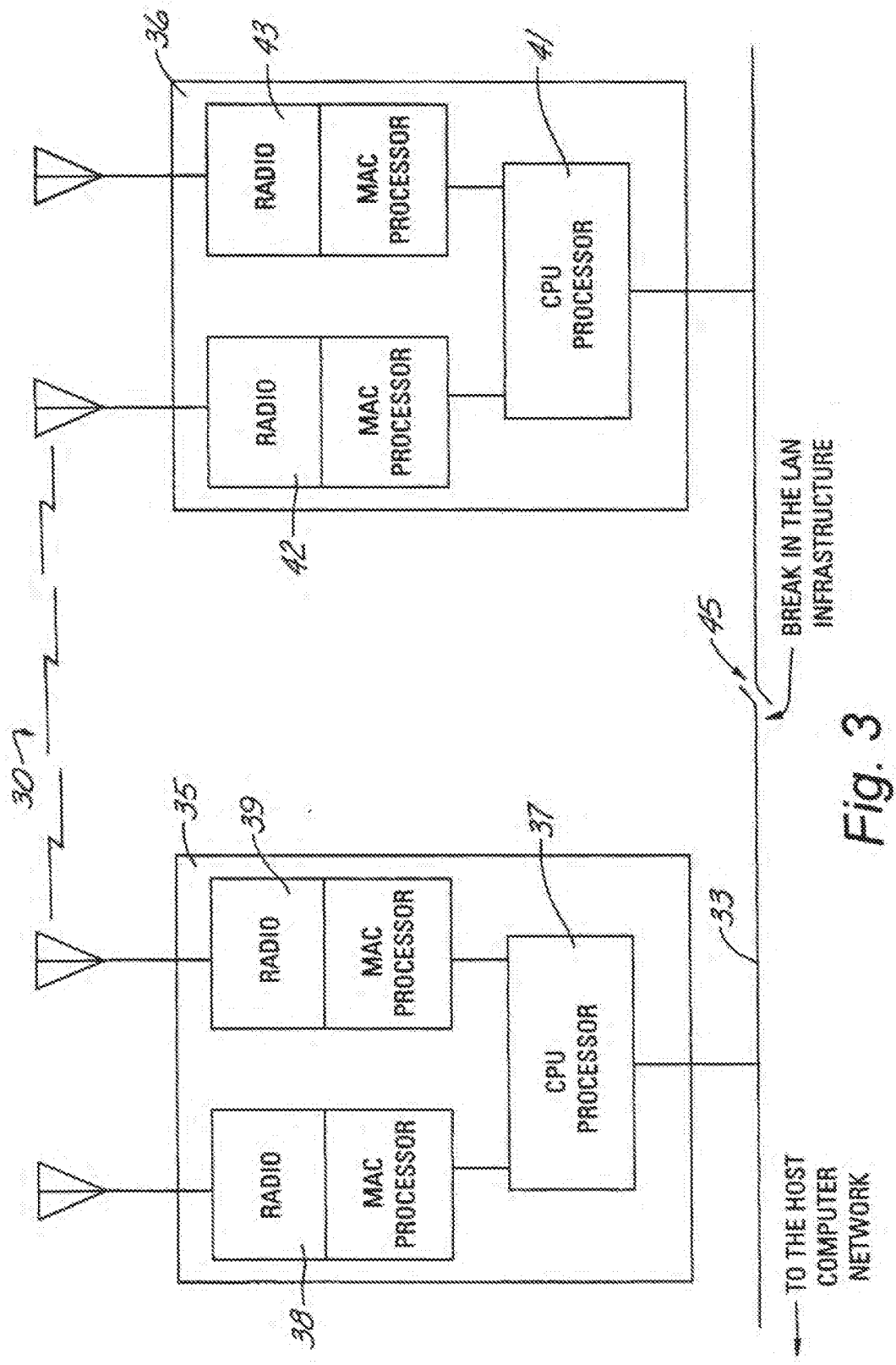
36
43
41
RADIO
MAC PROCESSOR
CPU PROCESSOR
RADIO
MAC PROCESSOR
42
30
35
39
37
RADIO
MAC PROCESSOR
CPU PROCESSOR
RADIO
MAC PROCESSOR
38
33
45
BREAK IN THE LAN INFRASTRUCTURE
TO THE HOST COMPUTER NETWORK

Fig. 3

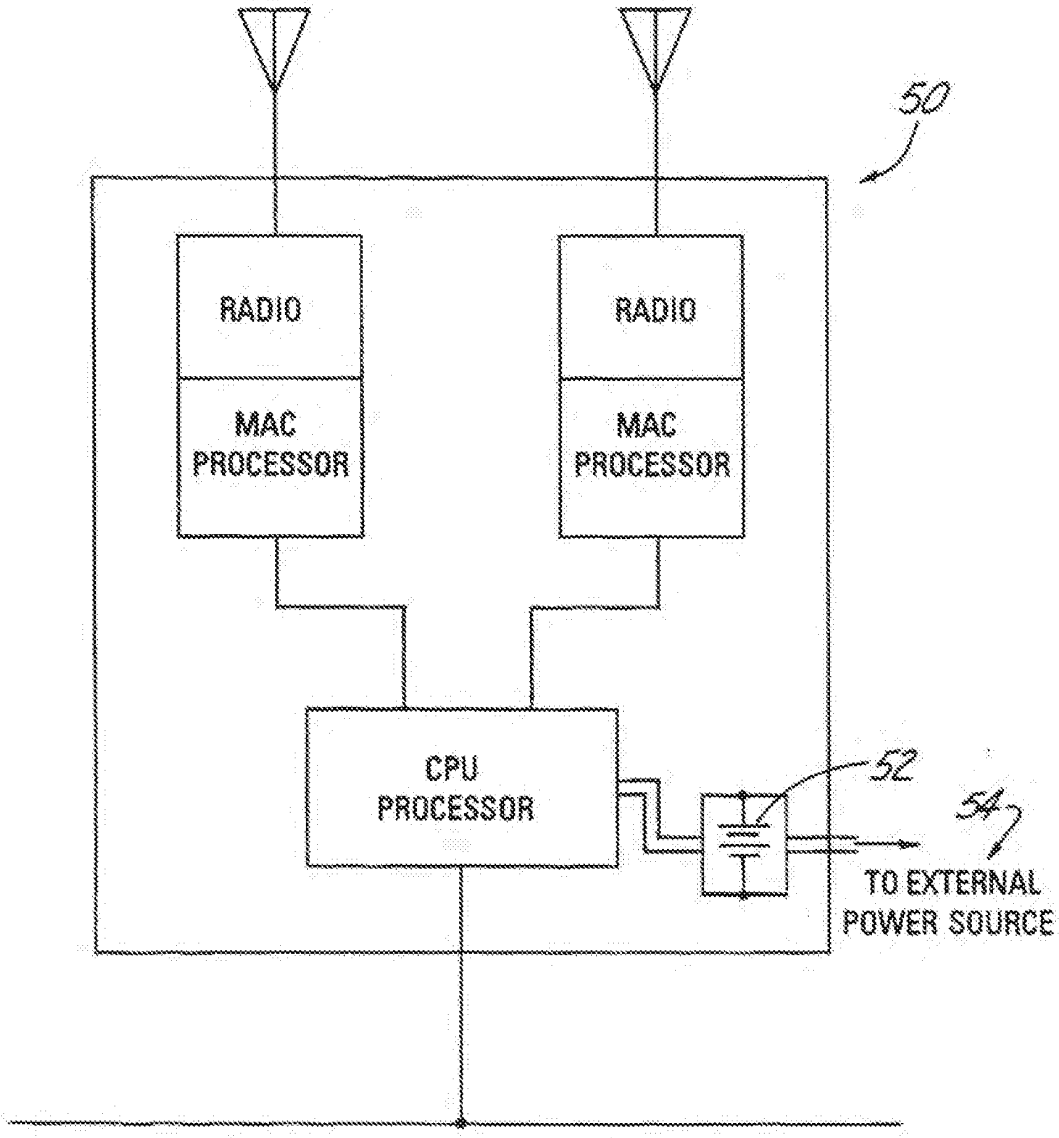
50
RADIO
MAC PROCESSOR
RADIO
MAC PROCESSOR
CPU PROCESSOR
52
54
TO EXTERNAL POWER SOURCE

Fig. 4

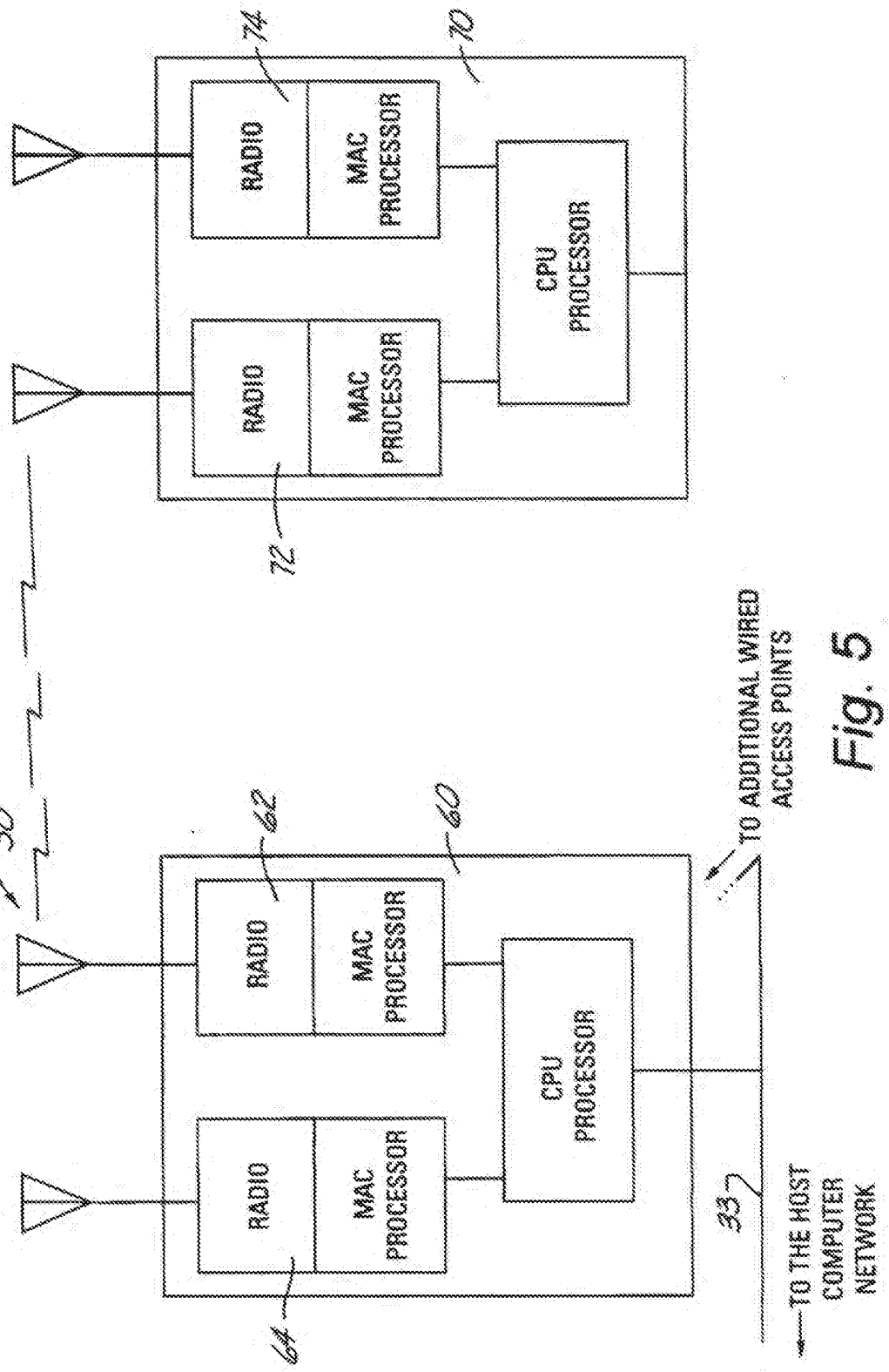
RADIO
MAC PROCESSOR
RADIO
MAC PROCESSOR
CPU PROCESSOR
74
70
72
30
RADIO
MAC PROCESSOR
RADIO
MAC PROCESSOR
CPU PROCESSOR
62
60
64
33
TO ADDITIONAL WIRED ACCESS POINTS
TO THE HOST COMPUTER NETWORK

Fig. 5

HIGH RELIABILITY ACCESS POINT FOR WIRELESS LOCAL AREA NETWORK

CROSS REFERENCE TO RELATED APPLICATIONS (Claiming Benefit Under 35 U.S.C. 120)

This application is a continuation-in-part of U.S. application Ser. No. 08/197,392, filed Feb. 16, 1994, by R. Mahany (Attorney Docket No. DN 28050A) which is in turn a continuation-in-part of U.S. application Ser. No. 08/170,121, filed Dec. 20, 1993, by R. Mahany (Attorney Docket No. DN 28050), both abandoned.

AUTHORIZATION PURSUANT TO 37 CFR 1.71 (d) (e)

A portion of the disclosure of this patent document contains material which is subject to copyright protection. The copyright owner has no objection to the facsimile reproduction by anyone of the patent document or the patent disclosure, as it appears in the Patent and Trademark Office patent file or records, but otherwise reserves all copyright rights whatsoever.

TECHNICAL FIELD

The present invention relates generally to access points used in wireless local area networks and more specifically to a highly reliable access point which uses redundant wireless adapters.

BACKGROUND OF THE INVENTION

Wireless local area networks (WLAN's) use radio frequency transmissions to communicate between roaming computer devices and access points (or base stations). These access points are connected to an infrastructure which electronically connect all of the access points to a host system. The infrastructure and the access points make up the information distribution network.

DISCLOSURE OF THE INVENTION

The present invention relates generally to access points used in wireless local area networks and more specifically to a highly reliable access point which uses redundant wireless adapters. An access point built in accordance with the present invention includes at least two wireless adapters. Each wireless adapter includes a radio portion and a low level communication protocol processor. The low level processor could be a MAC (media access control) processor implementing a portion of the data link layer with the ISO protocol model. The access point also includes a Central Processing Unit (CPU) which controls all of the higher level communication protocol as well as controlling the interface between the access point and the infrastructure (the LAN).

The use of multiple wireless adapters allows for the access point to increase its reliability as well as the reliability of the entire distribution network in several ways. One way to increase reliability is to have all of the radios in an access point operating on the same channel simultaneously. This creates an antenna diversity scheme which helps eliminate the negative effects associated with multipath interference problems since each wireless adapter has its own antenna. The antennas of the adapter must be positioned apart from each other a minimum distance of at least one-fourth wavelength. The multiple listening strategy also helps to reduces the number of collisions which occur at the access point when multiple roaming computer devices concurrently attempt to communicate with the access point.

Another way to improve reliability is to have one wireless adapter within the access point monitor the transmission of another wireless adapter thereby creating a Local Loop Back. This provides a means for determining if a particular wireless adapter is working properly. If it is not, the Central Processing Unit can disable the malfunctioning wireless adapter and use only the properly functioning wireless adapters.

Increased reliability is also achieved when there is a break in the infrastructure between access points. In this case, an access point which is no longer connected to the host via the infrastructure can establish communication with an access point that is still connected to the host side infrastructure by having each access point dedicate one of their wireless adapters to infrastructure communication. This technique can also be employed to establish temporary or remote access points in a distribution network without use of a wired infrastructure.

In order to accomplish the strategies described above, the central processing unit of the access point can designate and change the addresses of the wireless adapters. Thus the CPU can set the wireless adapters to all be responsive to the same address or set each wireless adapter to be responsive to different address.

An access point of the present invention could include a back-up power supply to provide power for the access point when the externally supplied power to the access point is interrupted.

An object of the present invention is to provide a high reliability access point for a wireless local area network.

Another object of the present invention is to provide a high reliability access point which utilizes multiple wireless adapters and a central processing unit.

A further object of the present invention is to provide a high reliability access point with wireless adapters which includes low level processing capabilities.

Another object of the present invention is to provide a high reliability access point which utilizes a multiple listening scheme to reduce the negative effects of multipath interference.

Still another object of the present invention is to provide a high reliability access point which utilizes multiple wireless adapters to implement a local loop back listening scheme.

Other objects, advantages, and novel features of the present invention will become apparent from the following detailed description of the invention when considered in conjunction with the accompanying drawings.

BRIEF DESCRIPTION OF THE DRAWINGS

FIG. 1 is a schematic representation of a high reliability access point built in accordance with the present invention;

FIG. 2 is a schematic representation of another high reliability access point of the present invention utilizing an antenna diversity scheme at each wireless adapter;

FIG. 3 is a schematic representation of a distribution network for a wireless LAN system utilizing high reliability access points;

FIG. 4 is a schematic representation of a high reliability access point with a backup power supply; and

FIG. 5 is a schematic representation of a remote high reliability access point connecting to the distribution network.

BEST MODES FOR CARRYING OUT THE INVENTION

Referring now to the drawings wherein like reference numerals designate identical or corresponding parts throughout the several views, FIG. 1 shows a high reliability access point (10) built in accordance with the present invention. An access point is a base station on a wireless local area network with which roaming portable or mobile computer devices can connect and communicate. The access point is typically part of an overall distribution network which is connected to a host computer or entire computer local area network (LAN). The access points and the infrastructure make up the distribution network and allow for communications between the roaming computer devices and the host computer or entire computer local area network (LAN).

A high reliability access point (10) of the present invention includes a central processing unit (CPU) processor (13) and at least two wireless adapters (15 and 16). Each of the wireless adapters (15 and 16) include a radio (17 and 18), a media access control (MAC) processor (19 and 20) and an antenna (21 and 22), respectively. The radios and antennas are used for RF transmission and reception. The MAC processor controls low level protocol functions including controlling the operation of the radio, radio channel, error control, e.g. ARQ or Selective Response, and communication with the CPU processor (13). The CPU processor (13) controls the high level communications protocol functions and controls the interface (25) between the high reliability access point (10) and the infrastructure (26). In a preferred embodiment there is a PCMCIA standard interface between the wireless adapters and the access point.

The distribution network is comprised of all of the access points and the infrastructure which connects all of the access points. A host computer or an entire host network is connected to the distribution network. The distribution network allows computer devices roaming within the range of the distribution network to communicate with the host computer or host network.

The division between what is high level protocol, and thus handled by the CPU processor, and what is low level protocol, and thus handled by the MAC processor, can vary greatly depending upon the intelligence level of the MAC processor. In a preferred embodiment, the infrastructure conforms to an industry standard wired LAN such as Ethernet. The MAC processor can be made very intelligent and therefor capable of handling a great deal of radio specific protocol. On the other hand, the MAC processor can be minimally intelligent and handle only the most basic protocol functions allowing the CPU processor to handle the majority of the protocol functions.

Utilizing multiple wireless adapters in a single access point, as well as incorporating independent intelligence and low level protocol responsibility into each wireless adapter, yields several significant advantages. The examples depicted in FIGS. 1–4 show access points using only two wireless adapters per access point. Utilizing two wireless adapters in the manner discussed below will greatly increase the reliability of a particular access point as well as increase the reliability of the entire distribution network. Access points could use more than two wireless adapters and the utilization of the multiple wireless adapters would be similar to the implementation described using only two wireless adapters with addition protocol being required to handle the increased redundancy and to allow for more sophisticated self monitoring.

Referring still to FIG. 1, the CPU processor (13) can designate the RF address to which each wireless adapter (15 and 16) is to respond. The CPU processor (13) can, but need not, assign the same address to each wireless adapter. Therefore, in one configuration, the CPU processor (13) can designate that each of the wireless adapters (15 and 16) respond to the address assign to that access point (10). Designated as such, both radios (17 and 18) will be operating simultaneously on the same channel. In a frequency hopping system, both radios (17 and 18) would be operating on the same hopping sequence and be mutually synchronized to that hopping sequence.

Accordingly, when a roaming computer device within the range of the access point (10) attempts to communicate with the access point (10), both of the wireless adapters (15 and 16) are configured to receive the incoming transmission. As both wireless adapters (15 and 16) receive the transmission, each adapter can evaluate the quality of the of the signal it is receiving. Each adapter provides the received message and quality information to the CPU processor (13) The CPU processor (13) uses the quality information to determine which wireless adapter is receiving the higher quality signal. The CPU processor (13) will then typically choose to receive the incoming transmission on the wireless adapter with the higher signal quality and respond using the same adapter.

The antennas (21 and 22) can be position to allow the access point (10) to implement an antenna diversity scheme which will help reduce the negative effects caused by the interference associated with multipath reception. Antenna diversity can be accomplished in one of two ways. The antennas can either be places sufficiently far apart, typically greater than a quarter wavelength apart, or the antennas can be positioned at a 90 degree angle with respect to each other to create a polarization antenna diversity scheme.

With an antenna diversity scheme in place, the signal from a roaming computer device will be received differently on each antenna due to multipath signal propagation. Therefore, each wireless adapter may receive a signal of a different quality. The CPU processor (13) can choose which wireless adapter to use based upon the quality of the received signal. Each wireless adapter includes the capability of measuring signal quality and only good messages will be forwarded on to the CPU processor (13). The quality can be appended to the message or can be presented to the CPU in a memory register.

Referring now to FIG. 2, another high reliability access point (20) built in accordance with the present invention is shown. In this embodiment, in addition to having an antenna diversity scheme at the access point level, there is an antenna diversity scheme at the wireless adapter level. Each wireless adapter (15 and 16) includes at least two antennas (21 and 23, 22 and 24, respectively) positioned to create an antenna diversity scheme. Thus for the wireless adapter (15) the antennas (21 and 23) are either positioned sufficiently far apart, more than a quarter wavelength, or the antennas (21 and 23) are positioned in an asymmetrical or orthogonal manner to provide polarization diversity. The antennas (22 and 24) for the wireless adapter (26) are placed in a similar manner.

In this embodiment, an incoming signal is received on both antennas (21 and 23) of the wireless adapter (15). The MAC processor (19) then determines the quality of the signal coming in on each of the antennas (21 and 23) connected to the wireless adapter (15). Based upon the signal quality information, the MAC processor (19) will

choose which of the antennas (21 and 23) to use to receive the incoming transmission. The MAC processor will also forward the signal quality information regarding the selected antenna to the CPU processor (13). The wireless adapter (16) will perform a similar process and forward the signal quality information for its best antenna to the CPU processor (13). The CPU processor (13) can then determine which wireless adapter is receiving the highest quality signal and use that wireless adapter to receive the incoming transmission and respond to the transmitting station.

When a high reliability access point wishes to transmit a message, such as an acknowledgement of a received message, to a roaming computer device, the CPU processor (13) will utilize the received quality signal information to determine which wireless adapter to use to send the message. Likewise, if the wireless adapter is utilizing an antenna diversity scheme it will also select the most appropriate antenna for transmitting a message.

While one of the wireless adapters is transmitting, the other wireless adapter can operate as a promiscuous listener to determine if the correct message is being sent. For example, referring to FIG. 1, if the CPU processor (13) is sending a message to a roaming computer device via wireless adapter (16), wireless adapter (17) can operate in the receive mode and monitor the message being sent by the wireless adapter (16). This provides a local loop back capability and allows the access point to perform self monitoring. If the CPU processor (13) determines that one of the wireless adapters is not operating correctly, the malfunctioning wireless adapter can be disabled. Additionally, the CPU processor (13) can then send a message to the system management portion of the host network via the infrastructure (36) that it has a defective wireless adapter and repairs are needed.

Referring again to the configuration in which each of the wireless adapters are listening on the same channel, another advantage achieved by this configuration is the ability to receive two concurrent messages. In an access point which only contains one adaptor this situation will cause a collision and neither message will be received. In a high reliability access point built in accordance with the present invention, it is possible that the one wireless adapter will be able to receive one of the messages while the other wireless adapter receives the other, due to multipath fading at each of the wireless adapter antennas.

Referring now to FIG. 3, a portion of a distribution network (30) utilizing high reliability access points is shown. The distribution network (30) includes an infrastructure (33) and two high reliability access points (35 and 36). Access point (35) includes a CPU processor (37) and two wireless adapters (38 and 39). Access point (36) includes a CPU processor (41) and two wireless adapters (42 and 43). In the present example, a break (45) in the infrastructure (33) has occurred. Access point (35) is upstream to the break with respect to the host computer network and thus is not immediately affected by the break (45). However, access point (36) is downstream to the break (45) and therefore is no longer connected to the host computer network.

When a situation like this occurs, the downstream access point (36) will begin attempting to communicate with an upstream access point using wireless communication. In this example, the upstream access point is access point (35). However, the communication need not be with the access point immediately upstream, the only requirement is that it be with an access point which is upstream with respect to the break. The host computer network or other access points will previously have shared the logistic and address information concerning all of the access points to each access point in the distribution network.

Once communications with an upstream access point (35) is established, each access point (35 and 36) will dedicate one of its wireless adapters (39 and 42, respectively) to provide a wireless repair of the break (45) in the infrastructure (33). When this happens, the CPU processor for each of the access points will instruct the dedicated wireless adapter to change so that it is no longer operating on the same channel as the other adapter in the access point. A communication channel between access points is established. The dedicated wireless adapters (39 and 42) will no longer be used to transmit or receive information to or from roaming computer devices. However, the non dedicated wireless adapters (38 and 43) will continue to communicate with the roaming computer devices. Once the top priority of re-establishing communications between all of the access points in the distribution network (30) and the host computer network has been accomplished, the access points can then send a message to the system management portion of the host computer network detailing where the break (or breaks) exists.

It is conceivable that the distribution network could lose its entire infrastructure. In this case, each of the high reliability access points would dedicate one of its wireless adapters to network infrastructure communications while retaining one of its wireless adapters for communication with roaming computer devices. Using the same technique described above, a temporary or remote access point could be established which is intentionally not connected directly to the infrastructure. This configuration is discussed below in greater detail with reference to FIG. 5. The use of directional gain antennas for the dedicated wireless adapter would allow the temporary or remote access point to be positioned a considerable distance from the infrastructure.

Referring now to FIG. 4, a high reliability access point (50) with a back up power supply (52) is shown. Typically, the access point will be wired to an external power source (54) such as a wall outlet. However, there is a great desire that if power is lost that the distribution network not shut down since the roaming computer devices will normally not be dependent upon the external power source (54). In this embodiment of the present invention, the back-up power source (52) is wired in parallel with respect to the external power source (54). Thus, if the external power source (54) fails, the access point (50) will not lose power.

Referring now to FIG. 5, a remote access point (70) is shown connecting to the infrastructure (33) by means of dedicated wireless adapters (62 and 72). The access point (70) is not hard wired to the infrastructure (33). Therefore, the access point dedicates one of its wireless adapters (72) to network infrastructure communication. The other wireless adapter (74) continues to communicate with roaming computer devices within the range of the access point (70). An access point (60) which is hard wired into the infrastructure (33) dedicates one of its wireless adapters (62) to network infrastructure communication and establishes a link between the infrastructure (33) and the remote access point (70). The access point (60) can continue to service the roaming computer devices within its range through the wireless adapter (64).

The hard wired access point (60) which is used to connect the remote access point (70) to the infrastructure need not be the access point which is physically closest to the remote access point (70). Use of directional antenna would allow a

remote access point to establish communication with virtually any of the access points which are hard wired to the infrastructure. Additionally, several remote access points could establish wireless infrastructure communication by each dedicating one of their wireless adapters. In this arrangement, only one of the remote access points need be in communication with a wired access point. All other remote access points could establish communication with the host computer network via the one remote access point in communication with a wired access point.

Obviously, many modifications and variations of the present invention are possible in light of the above teachings. It is therefore to be understood that, within the scope of the appended claims, the invention may be practiced otherwise than as specifically described.

I claim:

1. A high reliability access point for use in a wireless local area network, comprising:

at least two wireless adapters wherein each adapter includes an RF radio, control processor means for handling low level protocol for said wireless adapter and antenna means operably connected to said adapter for transceiving radio signals; and

central processing unit means operably connected to each of said wireless adapters for controlling high level communication protocol for said high reliability access point.

2. The high reliability access point of claim 1 including:

means operably connected to said central processing means for connecting said high reliability access point to a wired local area network distribution system, said distribution system including a host network; and

wherein said central processing unit means includes means for interfacing said central processor unit means with said host network.

3. The high reliability access point of claim 1 wherein said antenna means for at least one of said wireless adapters comprises two antennas providing an antenna diversity function.

4. The high reliability access point of claim 1 wherein said control processor means for said wireless adapters comprises a media access control (MAC) processor.

5. The high reliability access point of claim 3 wherein said control processor means for said wireless adapter with said two antennas includes means for determining which of said two antennas is receiving the better signal.

6. The high reliability access point of claim 1:

wherein said control processor means for each of said wireless adapters includes means for quantifying the signal quality of the signal received on said antenna means;

wherein said control processor means for each of said wireless adapters includes means for transmitting said signal quality information to said central processing unit means; and

wherein said central processing unit means includes means for comparing said signal qualities for each of said wireless adapters whereby the central processing unit means can utilize the wireless adapter with the best signal.

7. The high reliability access point of claim 2 wherein said central processing unit means includes means for assigning addresses to each of said wireless adapters.

8. The high reliability access point of claim 7 wherein each of said wireless adapters are assigned the same address whereby the wireless adapters operate in a similar and simultaneous manner.

9. The high reliability access point of claim 7 wherein at least two of said wireless adapters are assigned different addresses and operate on different channels or on different frequency hopping sequences.

10. The high reliability access point of claim 8 wherein said central processing unit means includes means for selectively choosing which wireless adapter to receive incoming RF transmission whereby said central processing unit means will select the wireless adapter with the highest quality signal reception.

11. The high reliability access point of claim 10 wherein said central processing unit means includes means for utilizing wireless adaptor selected incoming RF transmission to transmit responsive outgoing RF transmission.

12. The high reliability access point of claim 8 wherein said central processing unit means includes means for using the multiple wireless adapters with the same address to reduce the occurrence of collisions when two or more RF transmissions are received at the access point at the same time.

13. The high reliability access point of claim 9 wherein said central processing unit means includes means for dedicating one of said wireless adapters for communication with another access point.

14. The high reliability access point of claim 13 wherein said central processing unit means includes means for detecting a break in the wired local area network distribution system.

15. The high reliability access point of claim 14 wherein said central processing unit means includes means for indicating to the host network that a break has occurred in the infrastructure.

16. The high reliability access point of claim 1:

wherein said central processing unit means includes means for initiating an RF transmission over one of said wireless adapters; and

wherein said central processing unit means includes means for listening to said initiated RF transmission using one of said remaining wireless adapters.

17. The high reliability access point of claim 16:

wherein said central processing unit means includes means for detecting when a wireless adapter is malfunctioning; and

wherein said central processing unit means includes means for excluding said malfunctioning wireless adapter from being used.

18. The high reliability access point of claim 17 wherein said central processing unit means includes means for indicating to the host network that a wireless adapter at the access point is malfunctioning.

19. The high reliability access point of claim 8:

wherein two of said wireless adapters receive the same transmitted RF signal;

wherein said central processing unit means includes means for comparing the information received by said two of said wireless adapters; and

wherein said central processing unit means includes means for utilizing said compared information to detect when a wireless adapter is receiving information incorrectly.

20. The high reliability access point of claim 19 wherein said central processing unit means includes means for indicating to the system management that a wireless adapter at the access point is malfunctioning.

21. The high reliability access point of claim 2 further including a back-up power source.

* * * * *

Exhibit I

US007873343B2

(12) **United States Patent**
Gollnick et al.

(10) **Patent No.: US 7,873,343 B2**
(45) **Date of Patent: *Jan. 18, 2011**

(54) **COMMUNICATION NETWORK TERMINAL WITH SLEEP CAPABILITY**

(75) Inventors: **Charles D. Gollnick**, Cedar Rapids, IA (US); **Ronald E. Luse**, Marion, IA (US); **John G. Pavek**, Cedar Rapids, IA (US); **Marvin L. Sojka**, Cedar Rapids, IA (US); **James D. Cnossen**, Marion, IA (US); **Arvin D. Danielson**, Cedar Rapids, IA (US); **Ronald L. Mahany**, Cedar Rapids, IA (US); **Mary L. Detweiler**, Pamell, IA (US); **Gary N. Spiess**, Lisbon, IA (US); **Guy J. West**, Cedar Rapids, IA (US); **Amos D. Young**, Cedar Rapids, IA (US); **Robert C. Meier**, Cedar Rapids, IA (US); **Keith K. Cargin, Jr.**, Cedar Rapids, IA (US); **Richard C. Arensdorf**, Ely, IA (US); **Robert G. Geers**, Cedar Rapids, IA (US)

(73) Assignee: **Broadcom Corporation**, Irvine, CA (US)

(*) Notice: Subject to any disclaimer, the term of this patent is extended or adjusted under 35 U.S.C. 154(b) by 0 days.
This patent is subject to a terminal disclaimer.

(21) Appl. No.: **12/468,698**

(22) Filed: **May 19, 2009**

(65) **Prior Publication Data**

US 2009/0247241 A1 Oct. 1, 2009

Related U.S. Application Data

(63) Continuation of application No. 10/630,138, filed on Jul. 29, 2003, now Pat. No. 7,536,167, which is a continuation of application No. 09/318,668, filed on May 25, 1999, now Pat. No. 7,558,557, which is a continuation of application No. 08/545,108, filed on

(51) **Int. Cl.** (Continued)
H04W 52/44 (2009.01)
H04W 52/28 (2009.01)

(52) **U.S. Cl.** **455/343.3**; 455/412.2; 455/517; 455/574

(58) **Field of Classification Search** ..... None
See application file for complete search history.

(56) **References Cited**

U.S. PATENT DOCUMENTS

3,781,815 A 12/1973 Boudreau et al.

(Continued)

FOREIGN PATENT DOCUMENTS

EP 281334 9/1988

(Continued)

OTHER PUBLICATIONS

Respondent Qualcomm Incorporated's Notice of Prior Art, with Exhibits A & D attached thereto, Nov. 15, 2005.

(Continued)

Primary Examiner—Philip J Sobutka
(74) *Attorney, Agent, or Firm*—McAndrews, Held & Malloy, Ltd.

(57) **ABSTRACT**

Improved apparatus for a radio communication system having a multiplicity of mobile transceiver units selectively in communication with a plurality of base transceiver units which, in turn, communicate with one or more host computers for storage and manipulation of data collected by bar code scanners or other collection means associated with the mobile transceiver units. A network controller and an adapter which has a simulcast and sequential mode provide selective interface between host computers and base transceivers. A scheme for routing data through the communication system is also disclosed wherein the intermediate base stations are organized into an optimal spanning-tree network to control the routing of data to and from the RF terminals and the host computer efficiently and dynamically. Additionally, redundant network and communication protocol is disclosed wherein the network utilizes a polling communication protocol which, under heavy loaded conditions, requires that a roaming terminal wishing to initiate communication must first determine that the channel is truly clear by listing for an entire interpoll gap time. In a further embodiment, a criterion used by the roaming terminals for attaching to a given base station reduces conflicts in the overlapping RF regions of adjacent base stations.

60 Claims, 26 Drawing Sheets

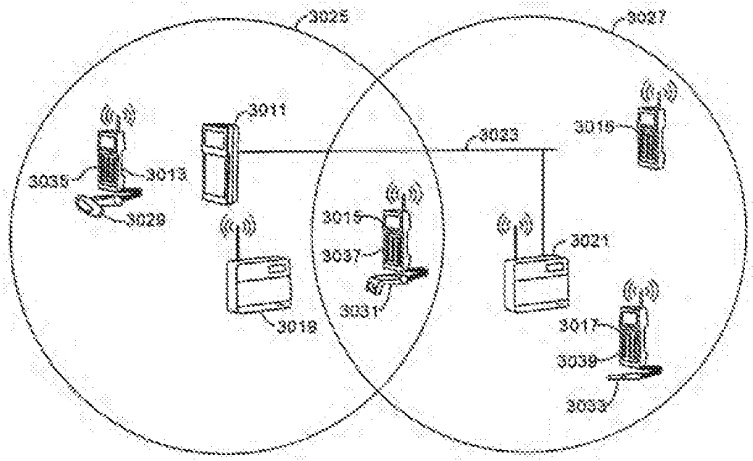

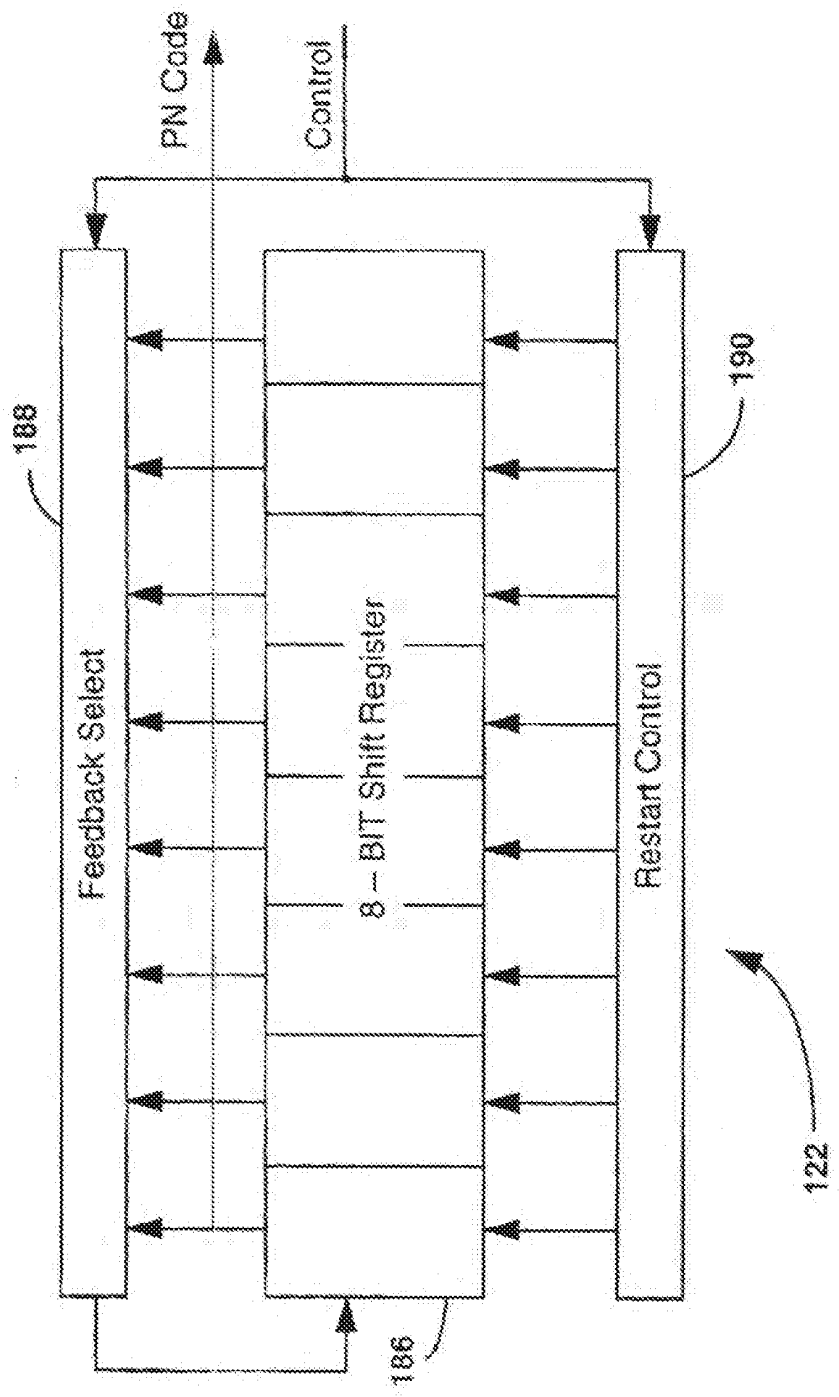
PN Code
Control
188
Feedback Select
8 – BIT Shift Register
186
190
Restart Control
122

FIG. 14A

Related U.S. Application Data

Oct. 19, 1995, now Pat. No. 5,940,771, which is a continuation of application No. 07/947,102, filed on Sep. 14, 1992, now abandoned, and a continuation of application No. 07/907,927, filed on Jun. 30, 1992, now abandoned, said application No. 07/947,102 is a continuation-in-part of application No. 07/907,927, which is a continuation-in-part of application No. 07/857,603, filed on Mar. 30, 1992, now abandoned, and a continuation-in-part of application No. PCT/US92/03982, filed on May 13, 1992, now abandoned, and a continuation-in-part of application No. 07/769,425, filed on Oct. 1, 1991, now abandoned, and a continuation-in-part of application No. 07/802,348, filed on Dec. 4, 1991, now abandoned, which is a continuation-in-part of application No. 07/790,946, filed on Nov. 21, 1991, now abandoned.

(56) **References Cited**

U.S. PATENT DOCUMENTS

4,164,628	A		8/1979	Ward et al.
4,332,027	A		5/1982	Malcom et al.
4,414,661	A		11/1983	Karlstrom
4,449,248	A		5/1984	Leslie et al.
4,630,314	A		12/1986	Smith
4,644,532	A		2/1987	George et al.
4,663,706	A		5/1987	Allen et al.
4,679,244	A		7/1987	Kawasaki et al.
4,725,993	A		2/1988	McNutt et al.
4,734,694	A		3/1988	Umetsu et al.
4,736,461	A		4/1988	Kawasaki et al.
4,745,408	A		5/1988	Nagata et al.
4,747,126	A		5/1988	Hood et al.
4,748,658	A		5/1988	Gopal et al.
4,794,649	A		12/1988	Fujiwara
4,799,253	A		1/1989	Stern et al.
4,804,954	A		2/1989	Macnak et al.
4,809,257	A		2/1989	Gamenbein et al.
4,837,858	A		6/1989	Ablay et al.
4,857,915	A		8/1989	Andres et al.
4,864,559	A		9/1989	Perlman
4,884,268	A		11/1989	Pilaumer
4,885,780	A		12/1989	Gopal et al.
4,903,319	A		2/1990	Kasai et al.
4,916,728	A		4/1990	Morley, Jr. et al.
4,926,064	A		5/1990	Tapang
4,942,552	A		7/1990	Merrill et al.
4,964,121	A		10/1990	Moore
4,977,611	A		12/1990	Maru
4,984,247	A		1/1991	Kaufmann et al.
4,989,230	A		1/1991	Gillig
4,995,099	A		2/1991	Davis
5,008,882	A		4/1991	Peterson et al.
5,018,133	A		5/1991	Tsukakoshi et al.
5,028,486	A		6/1991	Klughart
5,027,427	A		6/1991	Shimizu
5,027,428	A		6/1991	Ishiguro et al.
5,029,183	A		7/1991	Tymes
5,031,098	A		7/1991	Miller et al.
5,031,231	A		7/1991	Miyazaki
5,055,659	A		10/1991	Hendrick et al.
5,056,085	A		10/1991	Yu
5,058,023	A		10/1991	Kosikara
5,058,203	A		10/1991	Inagami
5,081,402	A		1/1992	Koleda
5,087,099	A		2/1992	Stolarczyk
5,089,813	A		2/1992	DeLuca et al.
5,093,926	A		3/1992	Sasata
5,099,509	A		3/1992	Morganstein et al.
5,103,459	A		4/1992	Gilbousen et al.
5,103,461	A		4/1992	Tymes
5,117,422	A		5/1992	Hauptschein et al.
5,117,449	A		5/1992	Metzniks
5,119,397	A		6/1992	Dahlin et al.
5,119,502	A		6/1992	Kallin et al.
5,121,408	A		6/1992	Cai et al.
5,123,039	A		6/1992	Bantz et al.
5,128,932	A		7/1992	Li
5,128,938	A		7/1992	Borras
5,134,347	A		7/1992	Koleda
5,142,279	A		8/1992	Jasinski et al.
5,142,531	A		8/1992	Kirby
5,142,534	A		8/1992	Simpson et al.
5,142,550	A		8/1992	Tymes
5,146,214	A		9/1992	Yamada et al.
5,150,360	A		9/1992	Perlman et al.
5,150,361	A		9/1992	Wieczorek et al.
5,152,006	A		9/1992	Klaus
5,157,687	A		10/1992	Tymes
5,159,592	A		10/1992	Perkins
5,163,080	A		11/1992	Amerose et al.
5,168,271	A	*	12/1992	Hoff ..... 455/343.4 X
5,168,498	A		12/1992	Adams
5,175,870	A		12/1992	Mabey et al.
5,203,020	A		4/1993	Sato et al.
5,224,150	A		6/1993	Neustein
5,224,152	A		6/1993	Harte
5,230,084	A		7/1993	Nguyen
5,239,466	A		8/1993	Morgan et al.
5,241,542	A		8/1993	Natarajan et al.
5,241,691	A		8/1993	Owen
5,252,963	A	*	10/1993	Snowden et al. ..... 455/343.4 X
5,255,268	A		10/1993	Cato et al.
5,257,019	A		10/1993	Schwendeman et al.
5,260,988	A		11/1993	Schellinger et al.
5,260,990	A		11/1993	McLampy et al.
5,265,270	A		11/1993	Stengel et al.
5,274,666	A		12/1993	Dowdell et al.
5,275,254	A		1/1994	Shiraishi et al.
5,278,680	A		1/1994	Messenger
5,278,831	A		1/1994	Mabey et al.
5,280,480	A		1/1994	Pitt et al.
5,285,208	A		2/1994	Bertiger
5,291,479	A		3/1994	Vaziri et al.
5,293,639	A		3/1994	Wilson et al.
5,295,154	A		3/1994	Meier et al.
5,296,849	A		3/1994	Ide
5,297,144	A		3/1994	Gilbert et al.
5,301,225	A		4/1994	Suzuki et al.
5,329,531	A		7/1994	Diepstraten et al.
5,329,576	A		7/1994	Handforth
5,331,634	A		7/1994	Fischer
5,343,512	A		8/1994	Wang
5,361,397	A		11/1994	Wright
5,371,734	A		12/1994	Fischer
5,371,898	A		12/1994	Grube et al.
5,373,506	A		12/1994	Taylor et al.
5,375,234	A		12/1994	Owen
5,377,192	A		12/1994	Goodings et al.
5,390,206	A		2/1995	Rein et al.
5,392,023	A		2/1995	D'Avello et al.
5,392,287	A		2/1995	Tiedemann, Jr. et al.
5,394,436	A		2/1995	Meier et al.
5,420,911	A		5/1995	Dahlin et al.
5,425,051	A		6/1995	Mahany
5,440,560	A		8/1995	Rypinski
5,461,627	A		10/1995	Rypinski
5,465,081	A		11/1995	Todd
5,504,476	A		4/1996	Marx et al.
5,509,035	A		4/1996	Teidemann, Jr. et al.
5,533,097	A		7/1996	Crane
5,550,895	A		8/1996	Burson

5,581,173	A	12/1996	Valla et al.
5,584,048	A	12/1996	Wieczorek
5,590,346	A	12/1996	West et al.
5,649,308	A	7/1997	Andrews
5,680,311	A	10/1997	Tesar et al.
5,696,468	A	12/1997	Nise
5,708,680	A	1/1998	Gollnick et al.
5,712,868	A	1/1998	Stern
5,740,366	A	4/1998	Mahaney et al.
5,745,523	A	4/1998	Dent et al.
5,757,239	A	5/1998	Gilmore
5,825,253	A	10/1998	Mathe et al.
5,828,693	A	10/1998	Webb
5,844,893	A	12/1998	Gollnick et al.
5,910,752	A	6/1999	Filipovic et al.
5,940,771	A	8/1999	Gollnick et al.
6,046,992	A	4/2000	Meier et al.
6,069,888	A	5/2000	Owen et al.
6,348,841	B1	2/2002	See
6,359,872	B1	3/2002	Mahany et al.
6,374,311	B1	4/2002	Mahany et al.
6,522,871	B1	2/2003	Patrick et al.
6,583,675	B2	6/2003	Gomez
6,593,826	B2	7/2003	See
6,694,129	B2	2/2004	Peterzell et al.
6,714,983	B1	3/2004	Koenck et al.
6,731,146	B1	5/2004	Gallardo
6,764,983	B1	7/2004	Hammond et al.
6,819,197	B2	11/2004	Maldonado
6,823,033	B2	11/2004	Fakim
6,888,913	B2	5/2005	Walker
6,911,858	B2	6/2005	Florescu
6,928,275	B1	8/2005	Patrick et al.
6,937,872	B2	8/2005	Krasner

FOREIGN PATENT DOCUMENTS

EP	0 490 441	A2	6/1992
GB	2250692		6/1992
JP	61-174743		8/1986
JP	62-37908		8/1994
WO	WO 92/02084		2/1992
WO	WO-9202084		2/1992

OTHER PUBLICATIONS

Qualcomm's Response to Interrogatory 3, with Exhibits B & C attached thereto, Aug. 16, 2005.
"A New Chapter in Wireless Communication and Email," Electronic Messaging News, vol. 3, No. 24, Nov. 27, 1991.
"AMDC Extends RFP Deadline to Mar. 10; Waiver Decision Expected At FCC's March Meeting," Industrial Communications, No. 7, Feb. 17, 1989.
"AMDC Picks Ericsson Gear," Communications Week, vol. 252, p. 44, Jun. 12, 1989.
"An Effective Prioritization Scheme for Handovers in Cellular Networks," IEEE—ICUPC '92 Proceedings, pp. 364-368, Sep. 29, 1992-Oct. 2, 1992.
"Ardis Links With NCR Notepad Dec. 11, 1991" Newsbytes, Dec. 11, 1991.
"Ardis to Face Competition From RAM," Newsbytes, Feb. 5, 1991.
"Automation in Warehousing," Proceedings of the 8th International Conference, Tokyo, Japan, pp. 1-355, Oct. 6-8, 1987.
"Autonomous Radio Stations Possible Over Mobitex," Industrial Communications, No. 48, Dec. 9, 1988.
"Bean Bullish on Growth of Mobile Data in New Future," Industrial Communications, No. 7, p. 8, Feb. 15, 1991.
"Bellsouth Buys Into Ram's Nationwide Mobile Data Network," Industrial Communications, No. 42, Oct. 18, 1991.
"BellSouth Has Option to Buy RAM Oct. 11, 1991," Newsbytes, Oct. 11, 1991.
"BellSouth Ram in Joint Venture," BOC Week, vol. 8, No. 40, p. 12, Oct. 21, 1991.
"Bellsouth, RAM to Form Mobile Communications Joint Venture," PR Newswire, p. 1, Oct. 10, 1991.
Briefing Document for the Design of the Diploma Messager MMI, Mar. 1989.
"Broadband Lan Technology," 1988.
"BT Opens New Service Center," Communications Week, p. 25, Nov. 11, 1991.
"Business Plan Appendix IV—Financial Projections", Nov. 1, 1990.
"C Business Plan" Cognito Group Limited, Nov. 1, 1990.
"C Business Plan," Cognito Group Limited, Apr. 1990.
"Canadian Cellular Industry (the)—Industry Report," First Marathon Securities Ltd. Industry Report, Investext Report No. 1154903, p. 30, Oct. 25, 1991.
"Cantel to Launch Mobile-Data and Paging Networks," The Gazette, Montreal Quebec, p. D1, May 10, 1989.
"Cellular System Dual-Mode Mobile Station—Base Station Compatibility Standard," EIA/TIA Interim Standard, IS-54, May 1990.
"Cellular System Mobile Station—and Station Compatibility Specification," Office of Science Technology Bulletin No. 53, Jul. 1983.
"Change Request 05.02-11," Recommendation GSM 05.02, v. 3.3.0, Jan. 22, 1989.
"Change Request 05.02-14," Recommendation GSM 05.02, v. 3.3.0, Nov. 28, 1989.
"Coded First to Jump on Mobitex Equipment Bandwagon, Sees Data Licenses As Worth As Much As Cellular," Industrial Communications, No. 22, Jun. 9, 1989.
"Communications Personals," Communications Daily, vol. 11, No. 28, Feb. 11, 1991.
"Complexity, High Price Keep Some Customers Away: Mobile Datacoms Taxes Users," Communications Week International, p. 20, Apr. 1, 1991.
"Consolidation, New Ventures Going Full Speed Ahead in All Markets," Industrial Communications, No. 36, p. 1, Oct. 6, 1989.
"Covering Note to Draft Rec. GSM 01.04 Version 2.00.01—Vocabulary in a GSM PLMN," GSM 01.04 v. 2.00.01, Sep. 28, 1990.
"Cutting the Ties That Bind," InformationWeek, vol. 314, pp. 25-30, Apr. 1, 1991.
"DEC on Move: Teaming With Ericsson in Mobile Data Market," Communications Week International, p. 1, Mar. 18, 1991.
"DEC Targets Mobile Data Market," Communications Week International, p. 9, Mar. 18, 1991.
"DEC-Ericsson Agreement," Communications Week, p. 25, Nov. 11, 1991.
"Descriptive Air Interface Protocol," Cognito Group Limited, V.6.0, Aug. 19, 1991.
"Digital and Ericsson to Co-Operate on Mobile Data," Exchange, vol. 3, No. 42, Nov. 1, 1991.
"Discontinuous Reception (DRX) in the GSM System," Recommendation GSM 03.13, v 3.0.2, Jan. 15, 1990.
"Editorial: Telecom Trends," Newsbyte News Network, Dec. 24, 1991.
"Ericsson—Company Report First Boston Corporation (The)," Investext Report No. 813838, p. 9, Jun. 10, 1988.
"Ericsson—Company Report: Hoare Govett Investment Research Ltd," Investext Report No. 1039045, p. 22, Oct. 1, 1990.
"Ericsson—Company Report: Prudential Securities Inc.," Investext Report No. 1001955, p. 10, Mar. 19, 1990.
Ericsson—Company Report: Svenska International PLC, Ericsson Company Report, Svenska International PLC, Investext Report No. 1142535, p. 2, Oct. 4, 1991.
"Ericsson (L.M.) (Telefon A/B)—Company Report: FT Analysis," Ericsson (L.M.) (Telefon A/B) Company Report FT Analysis , Investext Report No. 6027183, p. 3, Nov. 19, 1991.
"Ericsson and Digital Cooperate on Mobile Communications," Newsbyte News Network Oct. 8,1991, Newsbytes, Oct. 8, 1991.
"Ericsson and Digital Cooperated in Mobile Data," Business Wire, San Francisco, p. 1, Oct. 7, 1991.
"Ericsson and GE and Speedwing Mobile Communications Team Up to Bring Mobile Data Communications to Airports Worldwide," Business Wire, San Francisco, p. 1, Sep. 17, 1991.
"Ericsson and GE Have Formed Joint Venture," Communications Daily, Aug. 28, 1989.

"Ericsson Announces Communications Software," Industrial Communications, No. 9, Mar. 1, 1991.
"Ericsson GE and Meland Technologies Announce a Strategic Alliance in Mobile Data Communications," Business Wire, San Francisco, p. 1, Sep. 30, 1991.
"Ericsson GE and Racotek Announce a Strategic Relationship for Mobile Data Communications," Business Wire, San Francisco, p. 1, Sep. 16, 1991.
"Ericsson GE and Racotek Inc. In Marketing Supply Deal," Alliance Alert-Medical Health, vol. 2, No. 10, Oct. 1, 1991.
"Ericsson GE and Speedwing Mobile Commun in Marketing Supply Deal," Alliance Alert-Medical Health, vol. 2, No. 10, Oct. 1991.
"Ericsson GE Awarded $11.6 Million Contract From the U.S. Navy," Business Wire, San Francisco, p. 1, Nov. 10, 1993.
"Ericsson GE Awarded Contract From the City of Richardson, Texas," Business Wire, San Francisco, p. 1, Oct. 1, 1991.
"Ericsson GE in Development Deal With Anterior and Rim," Newsbyte News Network, Nov. 26, 1991.
Ericsson GE in Joint Ventures to Develop Wireless E-Mail, Telecommunications Alert, vol. 8, No. 38, Nov. 19, 1991.
"Ericsson GE Mobile Communications New R&D Center Begins Operations in North Carolina," Business Wire, San Francisco, p. 1, Nov. 27, 1990.
"Ericsson GE Mobile Communications Opens Research and Development Center in North Carolina," Business Wire, San Francisco, p. 1, May 1, 1990.
"Ericsson GE Mobile Communications to manage Its Worldwide Cellular Telephone Business From RTP, N. C.," Business Wire, San Francisco, p. 1, Apr. 24, 1991.
"Ericsson GE Mobile Data and BRM Mobile Data Sign Agreements With GE Consumer Service," News Release, p. 1, Jul. 25, 1991.
"Ericsson GE Mobile Data and RAM Mobile Data Sign Agreements With GE Consumer Services," Business Wire, San Francisco, p. 1, May 9, 1991.
"Ericsson GE, Anterior Technology & Research in Motion (RIM)—Announce Wireless Access for E-Mail Users," News Release, p. 1, Nov. 18, 1991.
"Ericsson Gets $55M Pact for Cellular Radio Data Gear," Electronic News (1991), p. 19, Jun. 12, 1989.
"Ericsson Has Data Unit" Communications Week, p. 8, Jan. 8, 1990.
"Ericsson Mobile Data Formed in New Jersey," Communications Daily, Jan. 5, 1990.
"Ericsson Signs $55 Million Agreement With Ram Broadcasting for Mobile Data Network," Industrial Communications, No. 20, Jan. 2, 1989.
"Ericsson to Introduce Radio Modem Next Month," Telecommunications Alert, vol. 8, No. 56, Dec. 17, 1991.
"Ericsson/GE Announces New Agreements," Industrial Communications, No. 40, Oct. 4, 1991.
"Ericsson: Breakthrough $55 Million Agreement for Mobile Data Network in U.S.A.," Edge, vol. 4, No. 64, Jan. 12, 1989.
"Ericsson's Mobitex Mobile Data System is Chosen by Cantel for Nationwide Public Mobile Data Service in Canada," News Release, Ericsson (LM) Telephone, p. 1, Dec. 1, 1988.
"European Digital Cellular Telecommunications System (Phase 1), Network Functions," GSM 03.01 v 3.1.1, Feb. 1992.
"European Digital Cellular Telecommunications System (Phase 2), Discontinous Reception (DRX) in the GSM System," GSM 03.13, v. 4.0.1, Jul. 1, 1993.
"European Digital Cellular Telecommunications System (Phase 2), Functions Related to Ms in Idle Mode," GSM 03.22, Version 4.4.0, Jun. 25, 1993.
"European Digital Cellular Telecommunications System (Phase 2), Mobile Stations (MS) Features," GSM 02.07, Oct. 1993.
"European Digital Cellular Telecommunications System (Phase 2), Mobile Stations Features," GSM 02.07, v. 4.4.1, Jun. 7, 1993.
"FCC Calendar of Events for the Week of Feb. 11," FCC Daily Digest, vol. 10, No. 27, Feb. 8, 1991.
"IBM, Motorola Join Networks Forming 2-Way Data Offering," Industrial Communications, No. 5, p. 1, Feb. 2, 1990.
"Industry Briefs," Network World, vol. 8, No. 41, pp. 9, 11, Oct. 14, 1991.
Lead Story #2: Swedish Government Picks Magnavox AVL for Upcoming Trials, Inside IVHS, vol. 1, No. 3, Feb. 4, 1991.
"Man-Machine Interface of the Mobile Station," Recommendation GSM 02.30, v 3.3.0, Mar. 1990.
"Minigrams," Computergram International, No. 1803, CG11150023, Nov. 15, 1991.
"Mobidata and Cantel Set to Complete in Digital Mobile Data Market," Common Carrier Week, vol. 6, No. 21, May 22, 1989.
"Mobile Data Communications—A New Market," News Release, p. 1, Jul. 3, 1987.
"Mobile Data Communications: Erickson GE & Racotek in Strategic Relationship," Edge, vol. 6, No. 165, p. 6, Sep. 23, 1991.
"Mobile Data Communications: Ericsson GE & Racotek in Strategic Relationship," Edge, vol. 2, No. 70, p. 21, Sep. 23, 1991.
"Mobile Move," CommunicationsWeek International, No. 73, p. 3, Nov. 4, 1991.
"Mobile Station Features," Recommendation GSM 02.07, v 3.4.0, Jan. 1991.
"Mobile Station Features," Recommendation GSM 02.07, v. 3.3.0, Mar. 1990.
"Mobile Station Features," Recommendation GSM 02.07, v. 3.4.1, Feb. 1992.
"Mobile Station Features," Recommendation GSM 02.07, v. 3.4.1, Apr. 1991.
"Mobile Users Get Electronic Mail Link (Anterior Technology)," Communications International, Dec. 13, 1991, No. 1823, CG11212016.
"Motorola Inc.—Company Report: Kidder, Peabody & Company Inc.," Investext Report No. 1011254, p. 2, May 15, 1990.
"MS-BSS Interface Data Link Layer Specification," Recommendation GSM 04.06, v. 3.6.0, 1992.
"MTEL WOOS FCC for Two-Way Data Net At 930-931 MHz," Industrial Communications, No. 47, Nov. 22, 1991.
"Multi-Channel Land Mobile Systems for Dispatch Traffic (With or Without PSTN Interconnection)," ITU-R—International Telecommunication Union/ITU Radiocommunication Sector, Report No. 741-3, pp. 142-153, 1990.
"Multiplexing and Multiple Access on the Radio Path," GSM Recommendation 05.02, v. 3.4.1, Jan. 1990.
"National Car Rental Chooses RAM for Data Network Services," Industrial Communications, VIS24, Jan. 14, 1991.
"National Mobile Data Network Sends Out Request for Information: Dream System in Mind Already," Industrial Communications, Oct. 21, 1988.
"Noise-Free Data Nets Introduced,"Telecommunications Alert, vol. 8, No. 7, Jul. 1990.
"Nokia—Line of Business Classification," Annual Report, 1987.
"Nordic Monthly—Geographic Report: Svenska International PLC," Investext Report No. 1142734, p. 6, Oct. 1, 1991.
"Northern Indiana Public Service Company Selects $10 Million Ericsson GE Communications System," News Release, p. 1, Nov. 11, 1991.
"Other Manufactures Developing Compatible Hardware," Industrial Communications, No. 48, Dec. 9, 1988.
"Outline of Idle Mode Tasks, GSM Recommendation" 03.22, v. 1.0.1, May 23, 1991.
"Physical Layer on the Radio Path: General Description," Change Request 05.02-2, Recommendation GSM 05.01, v. 3.3.0, Nov. 17, 1989.
"Physical Layer on the Radio Path: General Description," GSM 05.01, v. 3.2.0, May 1988.
"Programme Management Review, GSM Action Plan, Review 18" ETSI/GSM 23, Jun. 5, 1989.
"Programme Management Review, GSM Action Plan, Review 18" GSM 243/89, Jun. 5, 1989.
"Proposed EIA/TIA Interim Standard, Wideband Spread Spectrum Digital Cellular System Dual-Mode Mobile Station—Base Station Compatibility Standard," EIA/TIA/IS-95, Apr. 21, 1992.
"Radio-Linked Network to Be Offered to Airlines Sep. 19, 1991," Newsbytes, Inc., Sep. 19, 1991.
"RAM Adds Customers to Mobile Data Network," Industrial Communications, No. 14, Apr. 5, 1991.

"RAM Mobile Data and Ericsson Ge Mobile Data Announce Agreements With Sears Business Centers," News Release, p. 1, Mar. 26, 1991.
"RAM Mobile Data Launches Network With Transcontinental Message," News Release, p. 1, Feb. 20, 1991.
"Ram Signs GE Consumer Service to a Pilot Test on its Data Network," Industrial Communications, No. 19, May 10, 1991.
"Sales Decline: Ericsson 9-Month Net Off 53%," Electronic News, vol. 37, Issue 18, 1991.
"Sears Business Centers to Market RAM's Mobile Data Network," Industrial Communications, No. 13, Mar. 29, 1991.
"Sears Inks Pacts With Ericsson, RAM Mobile Data," Computer Reseller News, 102, Issue 418, p. 1-2, Apr. 29, 1991.
"Security Related Network Functions," Recommendation GSM 3.20, v. 3.3.2, Jan. 1991.
"Service," Industrial Communications, No. 48, Dec. 9, 1988.
"SIM, Functional Characteristics," Recommendation GSM 02.17, v. 3.2.0, Mar. 1990.
"Simware and Ram Mobile Data Network Sign Strategic Marketing Agreement," News Release, p. 1, Oct. 7, 1991.
"Smith Barney's Morning Call—Topical Report Smith Barney, Harris Upham & Co.," Investext Report, No. 1143237, p. 3, Oct. 11, 1991.
Wepman et al., "Spectrum Usage Measurements in Potential PCS Frequency Bands," IEEE—ICUPC '92 Proceedings, pp. 10-15, Sep. 29, 1992-Oct. 2, 1992.
"Strategic Agreement: Simware & Ericsson GE in Strategic Marketing Agreement for Laptop Computer Access to Corporate Mainframes," Edge, vol. 6, No. 169, p. 17, Oct. 21, 1991.
"Supporting Research and Advanced Development," NASA Space Programs Summary 37-48, vol. III, Jet Propulsion Laboratory, pp. 1-291, Dec. 31, 1967.
"Sweden Launches the World's First Public Radio Telecommunication Network for Text, Speech and Data," Newswire, Trade Publication, Industrial News Service, Feb. 24, 1987.
"Swedish Road Administration to Try Out Vehicle Location System," Industrial Communications Trade Publication, No. 14, Apr. 5, 1991.
"Swedish Telecom Mobitex System Eases Mobile Frequency Congestion," Communications News, vol. 22, No. 4, p. 135, Apr. 1985.
"The Messenger MMI Specification," Mar. 1990.
PARSA, "The Mobitex Packet-Switched Radio Data System," IEEE, pp. 534-538, Jul. 1992.
"The OSPF Specification," Oct. 1989.
Bertoni et al., "Theoretical Prediction of Slow Fading Statistics in Urban Environments," IEEE—ICUPC '92 Proceedings, pp. 1-4, Sep. 29, 1992-Oct. 2, 1992.
"Third-Quarter Losses Prompt Sizable Ericsson Layoffs," Industrial Communications, No. 47, Nov. 22, 1991.
Devasirvatham et al., "Two Frequency Radiowave Propagation Measurements in Brooklyn," IEEE—ICUPC '92 Proceedings, pp. 23-27, Sep. 29, 1992-Oct. 2, 1992.
"U.K. Mobile Data Licenses Granted," Communications Week International, No. 36, p. 18, Feb. 26, 1990.
"U.S. Army Selects Digitally Accessed Trunked Communications System for Training Centers," News Release, p. 1, Oct. 1, 1991.
"Update on Ardis-Mobitex Radio Modem Competition," Newsbytes, Inc., Oct. 2, 1991.
Xia et al., "Urban and Suburban Microcellular Propagation," IEEE—ICUPC '92 Proceedings, pp. 5-9, Sep. 29, 1992-Oct. 2, 1992.
"Vandals Wreck Cardphones to Increase Booty From Payphones," Europa 2000—Communications & Information Technology, vol. 3, No. 7, Sep. 1991.
"Vehicle Tracking and Communication Joint Venture," PRS Automotive Service, Aug. 22, 1991.
"Why Did Ericsson Pick Up the Long-For-Sale Ge Subsidiary?," Mobile Phone News, vol. 7, No. 18, Aug. 31, 1989.
"Wireless Data: the Next Frontier for Cellular," Mobile Phone News, vol. 9, No. 24, pp. 4-6, Dec. 5, 1991.
"Wireless World: Ericsson GE Enters Lockdown Matrix With Mobile Digital Telephone," Business Wire, San Francisco, p. 1, Oct. 7, 1991.
"Wireless World: Ericsson GE in Lockdown Matrix With Mobile Digital Telephone," Edge, vol. 6, No. 167, p. 29, Oct. 7, 1991.
"Wireless World: Ericsson GE, Anterior Technology & Research in Motion Announced Wireless Access for E-Mail Users," Business Wire, San Francisco, p. 1, Nov. 18, 1991.
"Wireless World: Ericsson GE, Anterior Technology & Research in Motion (RIM) Announce Wireless E-mail," Edge, vol. 6, No. 174, p. 4, Nov. 25, 1991.
"Year's Biggest Stories Land in Personal Communications, Spectrum (Part 1)" Industrial Communications, No. 1, Jan. 4, 1991.
Abowd et al., "Cyberguide: a Mobile Context-Aware Tour Guide," Wireless Networks, vol. 3, pp. 421-433, 1997.
Afek et al., "End-To-End Communication in Unreliable Networks," Proceedings of the 7th Annual ACM Symposium on Principles of Distributed Computing (Toronto, Ontario, Canada), pp. 131-148, 1988.
Aguirre et al., "Signal Strength Measurements At 915 MHz and 1920 MHz in an October Microcell Environment," IEEE—ICUPC '92 Proceedings, pp. 16-22, Sep. 29, 1992-Oct. 2, 1992.
Olmos et al., "Performance Analysis of a Second Order Delay-Lock Loop With Application to a CDMA System With Multipath Propagation," IEEE—ICUPC '92 Proceedings, pp. 209-213, Sep. 29, 1992-Oct. 2, 1992.
Akaiwa et al., "The Channel Segregation, A Self-Organized Dynamic Channel Allocation Method: Application to TDMA/FDMA Microcellular System," IEEE—ICUPC '92 Proceedings, pp. 346-349, Sep. 29, 1992-Oct. 2, 1992.
Alfano et al., "UPT Supplementary Services European Standards Scenario," IEEE—ICUPC '92 Proceedings, pp. 69-73, Sep. 29, 1992-Oct. 2, 1992.
Amsden, "Activities of the Cellular Telecommunications Industry Association Microcell/Microsystems Subcommittee Regarding Microcell Technology," IEEE—ICUPC '92 Proceedings, pp. 147-150, Sep. 29, 1992-Oct. 2, 1992.
Aoki, "Improved Output Spectrum of Linearized Class-F Power Amplifier for Digital Cellular Mobile Communications," IEEE—ICUPC '92 Proceedings, pp. 195-198, Sep. 29, 1992-Oct. 2, 1992.
Arndt et al., "International Standards on Universal Personal Telecommunications: State of the Art and Future Projections," IEEE—ICUPC '92 Proceedings, pp. 59-63, Sep. 29, 1992-Oct. 2, 1992.
Assarsson, "Technology, Know-How and Teamwork—The Vital Circle in a Ro-Ro Port," Report No. 0-904930-27-0, pp. 138-142, 1984.
Badrinath et al., "Designing Distributed Algorithms for Mobile Computing Networks," Proceedings of the Second Workshop on the Management of Replicated Data Rutgers University, pp. 1-13, 1994.
Badrinath et al., "To Send or Not to Send: Implementing Deferred Transmission in Mobile Host," ICDCS, Hong Kong, pp. 1-7, Jun. 1996.
Balakrishnan et al., "Improving Reliable Transport and Handoff Performance in Cellular Wireless Networks," Wireless Networks, vol. 1, pp. 469-481, 1995.
Bart, "Vendors Join the Wireless Bandwagon," Communications International, vol. 18, No. 19, p. 25, Oct. 1991.
Bartoli, "Group-Based Multicast and Dynamic Membership in Wireless Networks With Incomplete Spatial Coverage," Mobile Networks and Applications 3, pp. 175-188, 1998.
Bean, "Paging At the Crossroads—Industry Report," Arthur D. Little Decision Resources, Inc., Investext Report No. 1111592, pp. 5-6, Jun. 27, 1990.
Bedingfield, "On the Concept of a Service Host for Personal Communications Services," IEEE—ICUPC '92 Proceedings, Sep. 29, 1992-Oct. 2, 1992, IEEE—ICUPC '92 Proceedings, pp. 314-318, Sep. 29, 1992-Oct. 2, 1992.
Berkman, "Ericsson Is Restructuring to Adapt to a Deregulated Global Market," Electronic Business, , vol. 17, No. 2, pp. 34-38, Jan. 21, 1991.
Bernson, "Mobitex—A New Network for Mobile Data Communications," Ericsson Review, vol. 66, Issue 1, p. 33, 1989, Bates Nos. QBB151463-151469.
Biba, "A Hybrid Wireless MAC Protocol Supporting Asynchronous and Synchronous MSDU Delivery Services," IEEE 802.11/91-92, Sep. 1991.

Binkley et al., "Authenticated Ad Hoc Routing At the Link Layer for Mobile Systems," Wireless Networks, vol. 7, 1999.
Blankenhorn, PacTel Cellular Introduces Microcells in Los Angeles, Newsbytes, Inc., Oct. 2, 1991.
Blazevic et al., "Self-Organizing Wide-Area Routing," Proc. OTSCI, pp. 1-8, 2000.
Boncompagni et al., "Comments: Telecom Leaders From Around the World Reveal their Plans for the Future,"Telephony, vol. 216, No. 9, p. 28, Feb. 27, 1989.
Booker, "Cellular Modems Put the Office on the Road," Computerworld, vol. 25, No. 10, pp. 43-44, Mar. 11, 1991.
Booker, "Wireless Networks Create Tough Choices," Computerworld, vol. 25, No. 48, pp. 55-56, Dec. 2, 1991.
Borgman, "Telefonaktiebolaget L.m Ericsson—Company Report: Dillon, Read & Co.," Investext Report No. 1008947, p. 12, May 21, 1990.
Boyer, "An Analytical Comparison of Block Error Rate Performance for Wireline Data Modulation Standards in a Variably Fading Ricean Analog Cellular Channel," IEEE—ICUPC '92 Proceedings, pp. 121-125, Sep. 29, 1992-Oct. 2, 1992.
Bragwad et al., "Advanced Intelligent Network Requirements for Personal Communications Services," IEEE—ICUPC '92 Proceedings, pp. 324-328, Sep. 29, 1992-Oct. 2, 1992.
Brodsky, "Wireless Data Networks and the Mobile Workforce," Telecommunications, vol. 24, No. 12, p. 31, Dec. 1990.
Brodsky, "Wireless MANs/WANs Offer 'Data to Go'," Business Communications Review, vol. 21, No. 2, p. 45-51, Feb. 1991.
Buck, "Tele-Trends—Industry Report, Donaldson, Lufkin & Jenrette Securities Corp.," Investext Report No. 814739, p. 8, Jan. 24, 1988.
Bulusu et al., "Scalable Coordination for Wireless Sensor Networks: Self-Configuring Localization Systems," Proceedings of the 6th International Symposium on Communication Theory and Applications (ISCTA), pp. 1-6, Jul. 2001.
Bushaus, "GE, Ericsson in Cellular Pact," Telephony's Ann Report, vol. 217, No. 10, p. 3, Aug. 28, 1989.
Cáceres et al., Fast and Scalable Wireless Handoffs in Support of Mobile Internet Audio, Mobile Networks and Applications 3, pp. 351-363 , 1998.
Cáceres et al., "The Effects of Mobility on Reliable Transport Protocols," International Conference on Distributed Computing Systems, Nov. 1, 1993.
Cáceres et al., "Improving the Performance of Reliable Transport Protocols in Mobile Computing Environments," IEEE Journal on Selected Areas in Communications, vol. 13, No. 5, pp. 1-10, Jun. 1995.
Calhoun, "Digital Cellular Radio," 1988.
Callendar, "Standards for Global Personal Communications Services," IEEE—ICUPC '92 Proceedings, pp. 163-167, Sep. 29, 1992-Oct. 2, 1992.
Camazza et al., "PCS Data Management in an Intelligent Network," IEEE—ICUPC '92 Proceedings, pp. 329-333, Sep. 29, 1992-Oct. 2, 1992.
Campbell et al., "A Cellular IP Testbed Demonstrator," Center for Telecommunications Research, Columbia University, New York, pp. 1-4, 1999.
Carpintero et al., "Requirements for the Interconnection of Base Stations in a Wireless System," IEEE—ICUPC '92 Proceedings, pp. 141-146, Sep. 29, 1992-Oct. 2, 1992.
Cellular Data Network Functional Specification Rev. 2.0.2, Oct. 5, 1992.
Cellular Digital Packet Data System Specification Overview.
Cellular Digital Packet Data System Specification Preliminary Release 0.8—Book I, Mar. 19, 1993.
Cellular Digital Packet Data System Specification Preliminary Release 0.8—Book II, Mar. 19, 1993.
Cellular Digital Packet Data System Specification Preliminary Release 0.8—Book III, Mar. 19, 1993.
Cellular Digital Packet Data System Specification Release 0.3 Preliminary Working Draft, Dec. 28, 1992.
Cellular Digital Packet Data System Specification Release 0.8—Book IV, Mar. 19, 1993.
Cellular Digital Packet Data System Specification Release 0.8—Book V, Mar. 19, 1993.
Cellular Digital Packet Data System Specification Release 0.9—Preliminary Draft, N/A, Apr. 30, 1993.
Cellular Digital Packet Data System Specification Release 1.0—Book II, Jul. 19, 1993.
Cellular Digital Packet Data System Specification Release 1.0—Book III, Jul. 19, 1993.
Cellular Digital Packet Data System Specification Release 1.0—Book IV,Jul. 19, 1993.
Cellular Digital Packet Data System Specification Release 1.0—Book V, Jul. 19, 1993.
Cellular Digital Packet Data System Specification Release 1.0—Book I, Jul. 19, 1993.
Cellular Digital Packet Data System Specification Release 1.1—Book 1, 1995 CDPD Forum, Inc., Jan. 19, 1995.
Cellular Digital Packet Data System Specification Release 1.1—Book 2, 1995 CDPD Forum, Inc., Jan. 19, 1995.
Cellular Digital Packet Data System Specification Release 1.1—Book 3, 1995 CDPD Forum, Inc., Jan. 19, 1995.
Cellular Digital Packet Data System Specification Release 1.1—Book 4, 1995 CDPD Forum, Inc., Jan. 19, 1995.
Cellular Digital Packet Data System Specification Release 1.1—Book 5, 1995 CFPD Forum, Inc., Jan. 19, 1995.
Cellular Digital Packet Data System Specification Release 1.1—Book 6, 1995 CDPD Forum, Inc., Jan. 19, 1995.
Cellular Digital Packet Data System Specification Release 1.1—Book 7, 1995 CDPD Forum, Inc., Jan. 19, 1995.
Cellular Digital Packet Data System Specification Release 1.1—Book 8, 1995 CDPD Forum, Inc., Jan. 19, 1995.
Chang, "Dispersive Fading Effects in CDMA Radio Systems," IEEE—ICUPC '92 Proceedings, pp. 185-189, Sep. 29, 1992-Oct. 2, 1992.
Change Request to Specification GSM 02.11 Service Accessibility GSM 02.11, v 4.4.0, Feb. 11, 1993.
Chen et al., "Signaling System No. 7 Network Interconnect Impacts in Support of Mobile Communications Services," IEEE—ICUPC '92 Proceedings, pp. 247-252, Sep. 29, 1992-Oct. 2, 1992.
Chuang, "Frequency Reuse for Two Co-Existing TDMA Personal Communications Systems," IEEE—ICUPC '92 Proceedings, pp. 350-354, Sep. 29, 1992-Oct. 2, 1992.
Ciancetta et al., "Universal Personal Telecommunication Provision Within Intelligent Networks," IEEE—ICUPC '92 Proceedings, pp. 319-323, Sep. 29, 1992-Oct. 2, 1992.
Connolly, "Mobile Data Mission," Communications, Vol. 27, No. 8, pp. 41-48, Aug. 1990.
Coursey, Mobile Computing Matures: Radio Modems Will Let Portables Send, Receive E-Mail, InfoWorld, vol. 13, Issue 51, p. 28, 1991.
Craninckx et al., "Wireless CMOS Frequency Synthesizer Design," 1998.
Cunningham, "Rascal Telecom—Company Report Seringeour Vickers," Investext Report No. 908246, p. 4, Feb. 17, 1989.
Davis et al., "Filtered Spreading Sequences for Interference Avoidance," IEEE—ICUPC '92 Proceedings, pp. 54-58, Sep. 29, 1992-Oct. 2, 1992.
Didner, "Data Goes Mobile," Telephony, Mar. 11, 1991, vol. 220, No. 10, pp. 24-25.
Didner, "The Next Step in Mobile Communications," Telecommunications, Dec. 1990, vol. 24, No. 12, p. 48-50.
Dommety et al., "Flat Location Management Scheme for PCNs," 1997.
Dube et al., "Signal Stability Based Adaptive Routing (SSA) for Ad-Hoc Mobile Networks," IEEE Personal Communication, pp. 1-22, Aug. 26, 1996.
Duet, "An Assessment of Duplexing Methods for the Radio Links of Personal Communication Systems," IEEE—ICUPC '92 Proceedings, pp. 131-135, Sep. 29, 1992-Oct. 2, 1992.
Earnshaw, "The Topology Discovery Service," pp. 111-118, Feb. 18, 1993.
Edwards, "Simware Targets Software At RF Wireless Market," Computing Canada, vol. 17, No. 23, p. 53, Nov. 7, 1991.
Egan et al., "City of Dallas Fire Department Purchases $4 Million Ericsson GE Communications System," Business Wire, San Francisco, Oct. 16, 1991.

Egan et al., "Ericsson and GE Form Mobile Communications Joint Venture," Business Wire, San Francisco, p. 1, Aug. 24, 1989.
Egan et al., "McCaw Cellular, Lin Broadcasting to Rebuild Cellular Systems in N.Y., N.J. Pacific Northwest With Ericsson GE Equipment," Business Wire, San Francisco, p. 1, Oct. 3, 1990.
Egan et al., "SaskTel Purchases New Ericsson GE Communications System to Serve Saskatchewan," Business Wire, San Francisco, p. 1, Oct. 23, 1991.
Egan, "Ericsson Signs Breakthrough Agreement for Mobile Data Network," Business Wire, San Francisco, p. 1, May 31, 1989.
Elson et al., "Fine-Grained Network Time Synchronization Using Reference Broadcasts," pp. 1-14, May 15, 2002.
Eng et al., "A Wireless Broadband Ad-Hoc ATM Local-Area Network," Wireless Networks 1, pp. 161-174, 1995.
Epstein, "Indigenous Switching," Industry Report: Arthur D. Little Decision Resources, Incorporated, Investex Report No. 938157, p. 6, Jul. 1, 1987.
Ergen et al., "MEWLANA-Mobile IP Enriched Wireless Local Area Network Architecture," Proc. Of IEEE Vehicular Technology Conference (Vancouver), vol. 4, pp. 2449-2453, Mar. 2002.
Fenner, Mobil Address Management and Billing for Personal Communications, IEEE—ICUPC '92 Proceedings, pp. 253-257, Sep. 29, 1992-Oct. 2, 1992.
Foyil, "Nokia —Company Report: UBS Phillips & Drew Global Research Group," Investext Report No. 1034219, p. 2, Oct. 8, 1990.
Frangini, "Rogers Cantel Launches 'Public Access' Mobile Network," Computing Canada, vol. 16, No. 12, p. 53, Jun. 7, 1990.
Fraser, "The Mobitex Terminal Specification," Communications, vol. 28, No. 7, pp. 33-38, Jul. 1991.
Fraser, "The MTS—Part II," Communications, vol. 28, No. 8, pp. 52-55, Aug. 1991.
Fudge, "Third Generation Mobile Systems—What They Will Do and Who Decide," IEEE—ICUPC '92 Proceedings, pp. 433-442, Sep. 29, 1992-Oct. 2, 1992.
Gates, "Computers Enter the Wireless Age: New Technology Can Link Terminals Spanning Globe," Financial Post, p. 13, Jun. 8, 1991.
Ghassemian, "Evaluation of Different Handoff Schemes for Cellular IP," Master's Thesis, Kings College, London, 2001.
Goldberg, "Systems Engineering and Program Management for Personal Communications in TIP1," IEEE—ICUPC '92 Proceedings, pp. 151-157, Sep. 29, 1992-Oct. 2, 1992.
Goodman, "Cellular Packet Communications," IEEE Transactions on Communications, vol. 38, No. 8, Aug. 1990.
Gross, "Telephone Lines—Industry Report, Donaldson, Lufkin & Jenrette Securities," Industry Report, Investext Report No. 1149341, p. 14, Nov. 11, 1991.
GSM Program Management Information, GSM 87/88, Apr. 22, 1988.
Haber, "The Art of Wireless Computing," Midrange Systems, vol. 4, No. 16, p. 66, Aug. 6, 1991.
Hassdberg, "Mobitex Permits Tailored Telecom," Tele (English Edition), No. 2, vol. XXXXI, pp. 14-16, 1988.
Hang et al., "Microcellular Radio Performance in a Rayleigh/Rician CoChannel Interference Environment," IEEE—ICUPC '92 Proceedings, pp. 112-115, Sep. 29, 1992-Oct. 2, 1992.
Hayes et al., "Personal Satellite Communications Utilizing the KA-Band," IEEE—ICUPC '92 Proceedings, pp. 385-390, Sep. 29, 1992-Oct. 2, 1992.
Hightower et al., "Design and Calibration of the SpotON Ad-Hoc Location Sensing System," pp. 1-18, Aug. 2001.
Hines, "LM Ericsson—Company Report: Paine Webber Inc.," Investext Report No. 1153781, p. 9, Dec. 10, 1991.
Hirschman, "Service Mobility/Transparency for Personal Communications," IEEE—ICUPC '92 Proceedings, pp. 334-338, Sep. 29, 1992-Oct. 2, 1992.
Ho, "Effects of Antenna Polarization and Beam Pattern on Multipath Delay Spread and Path Loss in Indoor Obstructed Wireless Channels," IEEE—ICUPC '92 Proceedings, pp. 92-96, Sep. 29, 1992-Oct. 2, 1992.
Hodes et al., "Composable Ad-Hoc Location-Based Services for Heterogeneous Mobile Clients," Wireless Networks, vol. 5, pp. 411-427, 1999.
Honcharenk et al., "Theoretical Prediction of UHF Propagation Within Office Buildings," IEEE—ICUPC '92 Proceedings, pp. 102-105, Sep. 29, 1992-Oct. 2, 1992.
Huang et al., "OPNET Simulation of a Multi-Hop Self-Organizing Wireless Sensor Network," Florida Communication Research Labs, Motorola Labs, Fort Lauderdale, FL 33322, 2002.
Hunt, "The Regulatory Environment for Personal Communications in the Post-WARC-92 Period," IEEE—ICUPC '92 Proceedings, pp. 429-432, Sep. 29, 1992-Oct. 2, 1992.
Ioannidis et al., "IP-Based Protocols for Mobile Internetworking," Proceedings of Conference on Communications Architecture & Protocols, pp. 1-17, 1991.
Ioannidis et al., "IP-Based Protocols for Mobile Internetworking," Proceedings of Conference on Communications Architecture & Protocols, 1991.
Jain, "Characteristics of Destination Address Locality in Computer Networks: A Comparison of Caching Schemes," Jan. 23, 1990.
Jakobs et al., "Electronic Mail in Broadcast Networks," IEEE—ICUPC '92 Proceedings, pp. 412-416, Sep. 29, 1992-Oct. 2, 1992.
Jalali et al., "Performance of Data Protocols for In-Building Wireless Systems," IEEE—ICUPC '92 Proceedings, pp. 407-411, Sep. 29, 1992-Oct. 2, 1992.
Jetcheva et al., "Adaptive Demand-Driven Multicast Routing in Multi-Hop Wireless Ad Hoc Networks," Proceedings of the 2nd ACM International Symposium on Mobile Ad-Hoc Networking & Computing (Long Beach Session: Routing and Transport), pp. 33-44, 2001.
Johansson et al., "Scenario-Based Performance Analysis of Routing Protocols for Mobile Ad-Hoc Networks," Proceedings of the 5th Annual ACM/IEEE International Conference on Mobile Computing and Networking (Seattle), pp. 195-206, 1999.
Johansson, "The Mobitex Experience," Paper Presented At International Mobile Communications (London 1990), pp. 55-68, Jun. 1990.
Jung et al., "A Power Saving MAC Protocol for Wireless Networks," Department of Computer Science, Texas A&M University, Technical Report, Jul. 2002.
Jung et al., "An Energy Efficient Mac Protocol for Wireless LAN's," Department of Computer Science, Texas A&M University, Technical Report TR01-017, Jul. 31, 2001.
Kaplan, "The Network in Your Pocket," Business Communications Review, vol. 21, No. 3, p. 112, Mar. 1991.
Karp et al., "GPSR: Greedy Perimeter Stateless Routing for Wireless Networks," Proceedings of the 6th Annual International Conference on Mobile Computing and Networking (Boston), pp. 243-254, 2000.
Karp, "Geographic Routing for Wireless Networks," PhD Thesis, Harvard University, Oct. 2000.
Katz, "The Use of Connectionless Network Layer Protocols Over FDDI Networks," ACM Sigcomm Computer Communication Review, vol. 20(3), pp. 32-45, 1990.
Kay, "Extended-TDMA™ A High Capacity Evolution of U.S. Digital Cellular," IEEE—ICUPC '92 Proceedings, pp. 182-184, Sep. 29, 1992-Oct. 2, 1992.
Kearns, "Scope of ZENworks 7 Suite Stretches Far and Wide," Network World, (http://www.networkworld.com/newsletters/netware/2005/829nw1.html), Aug. 30, 2005.
Khandani et al., "ISI-Reduced Modulation Over A Fading Multipath Channel," IEEE—ICUPC '92 Proceedings, pp. 288-292, Sep. 29, 1992-Oct. 2, 1999.
Kiang, "Characteristics of Two-Alternative Frequency Channel Assignment Methods for TDMA Wireless Access Systems," IEEE—ICUPC '92 Proceedings, pp. 355-358, Sep. 29, 1992-Oct. 2, 1992.
Kiang, "Geometrical Ray Tracing Approach for Indoor Wave Propagation in a Corridor," IEEE—ICUPC '92 Proceedings, pp. 106-111, Sep. 29, 1992-Oct. 2, 1992.
Kikuta, "Global UPT Architecture With International Mobility Management," IEEE—ICUPC '92 Proceedings, pp. 229-233, Sep. 29, 1992-Oct. 2, 1992.
Kilpatrick, "Mobile Packet-Switched Data Networks," RF Expo East, Orlando, FL, pp. 367-369, Oct. 29, 1991-Oct. 31, 1991.
Kim, "KBLCOM Eyes Automated Customer Service System," Multichannel News, v. 12, N. 12, p. 102, Mar. 25, 1991.

Kleeman, "Optimal Estimation of Position and Heading for Mobile Robots Using Ultrasonic Beacons and Dead-Reckoning," Proceedings of the 1992 IEEE International Conference on Robotics and Automation (Nice, France), 1992.

Krashinsky et al., "Minimizing Energy for Wireless Web Access With Bounded Slowdown," Proc. ACM Mobicom 02 119-130, 2002.

Krechmer, "A Review of US Mobile Communications Standards," Telecommunications, vol. 25, No. 7, p. 43-45, Jul. 1991.

Kruz et al., "Spread Spectrum Indoor Video Transmission," IEEE—ICUPC '92 Proceedings, pp. 421-425, Sep. 29, 1992-Oct. 2, 1992.

Ku, "The Outlook of DCS 1800 for Personal Communications Networks," IEEE—ICUPC '92 Proceedings, pp. 168-171, Sep. 29, 1992-Oct. 2, 1992.

Kubo et al., "Simulated Tolerance of Loop Parameters of Cartesian Feedback Amplifier for π/4—Shifted QPSK Transmitter," IEEE—ICUPC '92 Proceedings, pp. 136-140, Sep. 29, 1992-Oct. 2, 1992.

Kumar, "Antennas for MSAT Ground Terminals," IEEE—ICUPC '92 Proceedings, pp. 219-223, Sep. 29, 1992-Oct. 2, 1992.

Kwok, "Wireless Networking Requirements of Multimedia Applications," IEEE—ICUPC '92 Proceedings, pp. 402-406, Sep. 29, 1992-Oct. 2, 1992.

Lambert, "Security for Universal Personal Communications," IEEE—ICUPC '92 Proceedings, pp. 44-48, Sep. 29, 1992-Oct. 2, 1992.

Larsen, "Marketing Mobile Data Services and Equipment," Proceedings of Cellular & Mobile Communications 88, pp. 111-116, Nov. 1988.

Larsen, "Mobitex—A System for Mobile Data Communication," Information Network and Data Communication, III, Proceedings of the IFIP TC6 International Conference on Information Network and Data Communication, Lillehammer, Norway, pp. 239-247, Mar. 1990.

Larsen, "Mobitex—Public Mobile Radio Service," Communications International, vol. 13, Pt. 10, p. 96, Oct. 1986.

Lau et al., "Interworking of Satellite and Terrestrial Networks for Land Mobile Communications," IEEE—ICUPC '92 Proceedings, pp. 375-379, Sep. 29, 1992-Oct. 2, 1992.

Laval et al., "Cognito Network Overview," Cognito Group Limited, Sep. 19, 1990.

Laval, "Briefing Document for a Brochure on the Cognito Mobile Messaging Service," Cognito Group Limited, May 22, 1990.

Lawson-Jenkins, "The Role of GSM in the Development of Standards for a Worldwide Personal Communication Network," IEEE—ICUPC '92 Proceedings, p. 79-81, Sep. 29, 1992-Oct. 2, 1992.

Leibowitz et al., "Rogers Cantel Mobile Communications Inc. —Company Report," Donaldson, Lufkin & Jenrette Securities, Investext Report No. 1145153, Oct. 15, 1991.

Lin et al., "A Two-Stage Maximum Likelihood Sequence Estimation Technique and Its Application to Data Transmission Protocol in Digital Cellular Radio," IEEE—ICUPC '92 Proceedings, pp. 303-307, Sep. 29, 1992-Oct. 3, 1992.

Linnartz et al., "Performance of Personal Communication Networks With Error Correction Coding in Microcellular Channels," IEEE—ICUPC '92 Proceedings, pp. 308-313, Sep. 29, 1992-Oct. 2, 1992.

Lo et al., "An Estimate of Network Database Transaction Volume To Support Personal Communications Services," IEEE—ICUPC '92 Proceedings, pp. 236-241, Sep. 29, 1992-Oct. 2, 1992.

Ioannidis et al., "The Design and implementation of a Mobile Internetworking Architecture," 1993 Winter USENIX, San Diego, CA, pp. 489-500, Jan. 25, 1993-Jan. 29, 1993.

Loberg et al., "Mobitex—The New Swedish Cellular Mobile Radio Service," International Conference on Radio Receivers & Associated Systems (4th: 1986), Pub. No. 68, pp. 77-82, 1986.

Loberg et al., "Mobitex Brings a New Look to Dispatch Communications," Communications International, vol. 12, No. 2, pp. 25-32, Feb. 1985.

Long et al., "Rapid Prototyping of Mobile Context-aware Applications: The Cyberguide Study," Proceedings of the 2nd Annual International Conference on Mobile Computing and Networking, (Rye, NY), 1996.

Loudermilk, "Trio Throws Weight Behind Radio E-Mail Technology," PC Week, vol. 8, No. 48, p. 39, Dec. 2, 1991.

Lusa, "The ITU's Quadrennial Telecom Show in Geneva Attracts and Dazzles Thousands," Networking Management, vol. 9, No. 14, pp. 12-14, Dec. 1991.

Lycksell, "Mobitex: A New Radio Communication System for Dispatch Traffic," Tele (English Edition), vol. 35, Issue 1, pp. 68-75, 1983.

Madhow, "Minimum Mean Squared Error Interference Suppression for Direct-Sequence Spread-Spectrum Code-Division Multiple-Access," IEEE—ICUPC '92 Proceedings, pp. 273277, Sep. 29, 1992-Oct. 2, 1992.

Malyan et al., "A Wireless Personal Communications Architecture for Urban Areas," IEEE—ICUPC '92 Proceedings, pp. 116-120, Sep. 29, 1992-Oct. 2, 1992.

Mandell et al., "A Comparison of Cdma and Frequency Hopping in a Cellular Environment," IEEE—ICUPC '92 Proceedings, pp. 172-176, Sep. 29, 1992-Oct. 2, 1992.

Maric et al., "Microcell Planning and Channel Allocation for Manhattan Street Environments," IEEE—ICUPC '92 Proceedings, pp. 359-363, Sep. 29, 1992-Oct. 2, 1992.

Mathy et al., "An Overlay Tree Building Protocol," J. Crowcroft and M. Hoffman (Eds.) Springer-Verlag Berlin Heidelberg, pp. 76-87, 2001.

McIlwain et al., "Routing Technology Software Inc. And Ericsson GE Team Up to Provide 'Roadshow' Routing Application to Mobitex Networks Worldwide," Business Wire, San Francisco, Jan. 8, 1991.

"Mobile Radio Interface Layer 3 Specification," Recommendation GSM 04.08, v. 3.3.1, Apr. 1989.

Mokhtar et al., "Capacity for Cellular CDMA PCS's in Nakagami Fading Log-Normal Shadowing Channels," IEEE—ICUPC '92 Proceedings, pp. 190-194, Sep. 29, 1992-Oct. 2, 1992.

Morrison et al., "Statistical Analysis and Autoregressive Modeling of the Indoor Radio Propagation Channel," IEEE—ICUPC '92 Proceedings, pp. 97-101, Sep. 29, 1992-Oct. 2, 1992.

Mulqueen, "Mobile Data Network Debate," Data Communications, p. 78, Jan. 1991.

Murphy et al., "UPT: Mobility vs. Portability," IEEE—ICUPC '92 Proceedings, pp. 224-228, Sep. 29, 1992-Oct. 2, 1992.

Murthy et al., "A Routing Protocol for Packet Radio Networks," Proceedings of the 1st Annual International Conference on Mobile Computing and Networking (Berkeley), pp. 86-95, 1995.

Murthy et al., "An Efficient Routing Protocol for Wireless Networks," Mobile Networks and Applications 1, pp. 183-197, 1996.

Nakajima et al., "Intelligent Network Architecture for Personal Mobile Telecommunication," IEEE—ICUPC '92 Proceedings, pp. 339-344, Sep. 29, 1992-Oct. 2, 1992.

Nichols, "LM Ericsson—Company Report: Prudential Securities Inc.," Investext Report No. 1033361, p. 19, Oct. 11, 1990.

Niksein et al. "DDR-Distributed Dynamic Routing Algorithm for Mobile Ad Hoc Networks," Proc. Of the 1st Annual ACM International Symposium on Mobile Ad Hoc Networking & Computing (Boston), Session A, pp. 19-27, 2000.

Nosl et al., "The Development of an 8 KBPS GMSK-Like Modem for Mobitex," IEEE Pacific Rim Conference on Communications, Computers and Signal Processing, vol. 2, pp. 791-794, May 9, 1991-May 10, 1991.

Noerpel, "Hybrid Signaling for the Air Interface for a Wireless Access Communication System," IEEE—ICUPC '92 Proceedings, pp. 49-53, Sep. 29, 1992-Oct. 2, 1992.

O'Byrne, "Digital Cellular Over the Cable Television Fiber-Optic Plant," IEEE — ICUPC '92 Proceedings, pp. 203-208, Sep. 29, 1992-Oct. 2, 1992.

Pande et al., "Application of Wireless Access to Telecommunication Services in Developing Countries," IEEE—ICUPC '92 Proceedings, pp. 82-86, Sep. 29, 1992-Oct. 2, 1992.

Perlman, "An Algorithm for Distributed Computation of a Spanning Tree in an Extended LAN," Proceedings of the Ninth Symposium on Data Communications (Whistler Mountain, British Columbia, Canada), pp. 44-53, 1985.
Perlman, "Incorporation of Multiaccess Links Into a Routing Protocol," Proceedings of the Eighth symposium on Data Communications (North Falmouth, MA), pp. 85-94, 1983.
Pouwelse et al., "Power Consumption Trade-Offs for Wireless Audio Access," Delft University of Technology, 2000.
Powell, "Cellular Telephones Give Way to Mobile Communications," Communications Canada, p. 35, Jun. 22, 1989.
Powell, "Use Cellular to Support Datacom Applications," Networking Management, vol. 9, No. 5, pp. 30-34, Apr. 1991.
Prakash, "A Routing Algorithm for Wireless Ad Hoc Networks With Unidirectional Links," Wireless Networks, vol. 7, pp. 617-625, 2001.
Prakash, "Unidirectional Links Prove Costly in Wireless Ad Hoc Networks," Proceedings of the 3rd International Workshop on Discrete Algorithms and Methods for Mobile Computing and Communication (Seattle), pp. 15-22, 1999.
Preston, "Ericsson, GE Form Mobile Venture," Communications Week International, No. 25, p. 9, Aug. 21, 1989.
Priyantha et al., "The Cricket Compass for Context-Aware Mobile Applications," Proceedings of the 7th Annual International Conference on Mobile Computing and Networking (MOBICOM 2000), pp. 1-14, 2001.
Purton, "BT Admits Impact of Recession But Still Manages to Improve Results," Europa 2000—Communications & Information Technology, vol. 3, No. 7, pR 83(1), Sep. 1991.
Ramesh et al, "Spectral Shaping Using Coded Modulation for Mobile Radio," IEEE—ICUPC '92 Proceedings, pp. 298-302, Sep. 29, 1992-Oct. 2, 1992.
Reinbold et al., "A Comparison of IP Mobility Protocols," Tech. Rep. Infonet-TR-13, Dec. 2001.
Reiter, "Three Cellular Modems," PC Magazine, vol. 9, No. 22, p. 365, Dec. 25, 1990.
Rodrigues et al., "Rural Satellite Service: A Mexican View," IEEE—ICUPC '92 Proceedings, pp. 380-384, Sep. 29, 1992-Oct. 2, 1992.
Rohani et al., "Low Cost High Performance CDMA System for U.S. PCS," IEEE—ICUPC '92 Proceedings, pp. 278-282, Sep. 29, 1992-Oct. 2, 1992.
Röhl et al., "A Short Look on Power Saving Mechanism in the Wireless LAN Standard" Draft IEEE 802.11, pp. 1-6, 1997.
Royer et al., "Multicast Operation of the Ad-Hoc On-Demand Distance Vector Routing Protocol," Proceedings of the 5th Annual ACM/IEEE International Conference on Mobile Computing and Networking (Seattle), pp. 207-218, 1999.
RPM Native Mode Interface R1.1.1 Reference Manual, May 1, 1992.
Salkintzis et al., "Mobile Packet Data Technology: An Insight Into MOBITEX Architecture," IEEE Personal Communications, pp. 10-18, Feb. 1997.
Sanford et al., "Facade Integrated Microstrip Patch Antennas Applied to Personal communication Networks," IEEE—ICUPC '92 Proceedings, pp. 214-218, Sep. 29, 1992-Oct. 2, 1992.
Savage, "A Technology to Link Professionals on the Road to Central Information Systems: Mobitex Public Networks in Europe," World Congress on Applications of Transport Telematics and Intelligent Vehicle-Highway Systems, vol. 5, pp. 2662-2668, 1995.
Schwartz, "Ericsson Set to Debut Radio Modems," Communications Week, p. 21, Dec. 2, 1991.
Seshan et al., "The Role of Digital Signal Processing in Personal Communications Networks," IEEE—ICUPC '92 Proceedings, pp. 200-204, Sep. 29, 1992-Oct. 2, 1992.
Seshan, "Low-Latency Handoff for Cellular Data Networks," Ph.D. Thesis, University of California At Berkeley, 1995.
Sheety et al., "Development in Mobile Markets," Communications International, vol. 18, No. 12, p. 47, Dec. 1991.
Sneed, "A 2-GHz CMOS LC-Tuned VCO Using Switched-Capacitors to Compensate for Bond Wire Inductance Variation," University of California, Berkeley, pp. 1-51, Dec. 21, 2000.
Sollenberger et al., "An Efficient TDMA Radio Link and Architecture for Wireless Local Access," IEEE—ICUPC '92 Proceedings, pp. 262-266, Sep. 29, 1992-Oct. 2, 1992.
Srisathapornpat et al., "Coordinated Power Conservation for Ad Hoc Networks," IEEE International Conference on Communications, 25(1), pp. 3330-3335, 2002.
Stein, "Greater Efficiency With Mobile Data Communication," Ericsson Review, vol. 68, Issue 4, pp. 104-110, 1991.
Steinert-Threlkeld, "Ericsson Unit to Aid New Network; Richardson Firm to Provide Equipment for Cellular Data Link," The Dallas Morning News, Record No. DAL1073150, Jun. 1, 1989.
"Subscriber Identity Modules, Functional Characteristics," Recommendation GSM 02.17, v. 3.2.0, Mar. 1990.
Sudame et al., "On Providing Support for Protocol Adaptation in Mobile Wireless Networks," Mobile Networks and Applications 6, pp. 43-55, 2001.
Sweeny, "IBM, Motorola Join to Offer Mobile Data," Communications Week, vol. 286, pp. 2, 84, Feb. 5, 1990.
Takas et al., "A Network Management Architecture for Satellite Based Personal Communications," IEEE—ICUPC '92 Proceedings, pp. 395-401, Sep. 29, 1992-Oct. 2, 1992.
Tan et al., "A Fast Handoff Scheme for Wireless Networks," Proceedings of the 2nd ACM International Workshop on Wireless Mobile Multimedia (Seattle, WA), 1999.
Tan et al., "Mobicast: A Multicast Scheme for Wireless Networks," Mobile Networks and Applications 5, pp. 259-271, 2000.
Tasno et al., "Multiplexing of Communication Ports on Unix Terminals for Packet Radio Networks," IEEE—ICUPC '92 Proceedings, pp. 417-420, Sep. 29, 1992-Oct. 2, 1992.
Technical Manual Callmaster Smart MT-270, 1982.
Thorbong et al., "Mobimed—A Telemedicine System for Mobile Monitoring of Physiological Parameters," SPIE, vol. 1355, Telecommunication for Health Care: Telemetry, Telemaliology, and Telemedicine 1990, Proceedings of IEEE Western Canada Conference and Exhibition, pp. 32-35, Jul. 6, 1990-Jul. 7, 1990.
Todd et al., "Low Power Rendezvous in Embedded Wireless Networks," Proceedings of the 1st ACM International Symposium on Mobile Ad Hoc Networking & Computing (Boston), Sessions D, pp. 107-118, 2000.
Todd et al., "Space and Frequency Diversity Measurements of the 1.7 GHz Indoor Radio Channel for Wireless Personal Communications," IEEE—ICUPC '92 Proceedings, pp. 87-91, Sep. 29, 1992-Oct. 2, 1992.
Toh, "A Hybrid Handover Protocol for Local Area Wireless ATM Networks," Mobile Networks and Applications 1, pp. 313-334, 1996.
Troe, "Mobile-Data Packet-Networks," Electro International Conference Record, New York, pp. 510-513, Apr. 16, 1991-Apr. 18, 1991.
Tsukamoto et al., "Mobility Management of Transport Protocol Supporting Multiple Connections," Proceedings of the Second International Workshop on Monthly Management & Wireless Access Protocols (Philadelphia, PA), Session 4, pp. 83-87, 2004.
Ubiquity 1000 Cellular Communications System—Technical Information, May 18, 1994.
Ubiquity 1000 Cellular Communications System for Your IBM ThinkPad™ 750, User's Guide, May 18, 1994.
Valko et al., "On the Analysis of Cellular IP Access Networks," Sixth IFIP International Workshop on Protocols for High Speed Networks (Salem), Aug. 25, 1999-Aug. 27, 1999.
Velocci, "Orbcomm Nears Full Operational Status," Aviation Week & Space Technology, vol. 149, No. 21, pp. 46-48, Nov. 23, 1998.
Vijayan et al., "The Dynamic Behavior of Handoff Algorithms," IEEE—ICUPC '92 Proceedings, pp. 39-43, Sep. 29, 1992-Oct. 2, 1992.
Vinton, "Cellular Market Booms, But Competition Looms," Business Communications Review, vol. 20, No. 8, p. 73-77, Aug. 1990.
Vizard, "Standards for UPT Introduction and Evolution," IEEE—ICUPC '92 Proceedings, pp. 74-78, Sep. 29, 1992-Oct. 2, 1992.
Wang et al., "On Frequency-Hop Multiple Access Sequences," IEEE—ICUPC '92 Proceedings, pp. 177-181, Sep. 29, 1992-Oct. 2, 1992.
Wang et al., "Tracking a Head-Mounted Display in a Room-Sized Environment With Head-Mounted Cameras," Proc. Of Helmet-Mounted Displays II, Orlando, FL, vol. 1290 SPIE, Apr. 19, 1990-Apr. 20, 1990.

Wang, "The Hierarchical Structure of Tracing Strategy for Universal Personal Communication Systems," IEEE—ICUPC '92 Proceedings, pp. 242-246, Jan. 23, 1992.
Want et al., "The Active Badge Location System," ACM Transactions on Information Systems, vol. 10, No. 1, pp. 91-102, Jan. 1992.
Webb, "Voice and Data Privacy Using Chaotic Time Sequences," IEEE—ICUPC '92 Proceedings, pp. 33-38, Sep. 29, 1992-Oct. 2, 1992.
Wilber-Hans et al., "Universal Personal Telecommunication (UPT) Service and Architecture Overview," IEEE—ICUPC '92 Proceedings, pp. 64-68, Sep. 29, 1992-Oct. 2, 1992.
Williams, "It's Telecom All the Way for a Rejuvenated Ericsson (LM Ericsson of Sweden Sticks to Telecommunications Business)," Electronic Business Buyer, Jul. 10, 1989.
Wilson et al., "CDMA Versus Dynamic TDMA for Access Controls in an Integrated Voice/Data PCN," IEEE—ICUPC '92 Proceedings, pp. 267-272, Sep. 29, 1992-Oct. 2, 1992.
Winters et al., "The Capacity of Wireless Communication Systems Can Be Substantially Increased by the Use of Antenna Diversity," IEEE—ICUPC '92 Proceedings, pp. 28-32, Sep. 29, 1992-Oct. 2, 1992.
Wolter, "Multiplexing on the Downlink of a TDMA-Based Radio System," IEEE—ICUPC '92 Proceedings, Sep. 29, 1992-Oct. 2, 1992, pp. 258-261.
Wolterink, "Handoff, A Necessary Feature in Wireless Office Systems," IEEE—ICUPC '92 Proceedings, pp. 368-374, Sep. 29, 1992-Oct. 2, 1992.
Woolnough, "Ericsson Pushes Mobile Data Standard," Electronic Engineering Times, vol. 520, p. 18, Jan. 9, 1989.
Woolnough, "Finnish Farm Has Mixed Results Building Through Acquisitions: Nokia Finds Fast Track Has Its Bumps," Electronic Engineering Times, vol. 614, pp. 85-86, Oct. 29, 1990.
Wu et al., "AMRIS: A Multicast Protocol for Ad Hoc Wireless Networks," Proceedings of IEEE MILCOMM '99 (Atlantic City, NJ), pp. 1-8, 1999.
Yamagishi et al., "A Low-Voltage 6-GHZ-Band CMOS Monolithic LC-Tank VCO Using a Tuning-Range Switching Technique," IEEE MTT-S Digest, pp. 735-738, 2000.
Yu, "IS-41 for Mobility Management," IEEE—ICUPC '92 Proceedings, pp. 158-162, Sep. 29, 1992-Oct. 2, 1992.
Lin et al., "A 900 MHz, 2.5mA CMOS Frequency Synthesizer With an Automated SC Tuning Loop," Custom Integrated Circuits Conference, 2000 CICC. Proceedings of the IEEE 2000, pp. 375, 378.
Ginsburg, "A 1.6-3.2 GHz, High Phase Accuracy Quadrature Phase Locked Loop," Masters Thesis, Department of Electrical Engineering and Computer Science, Mass. Inst. Of Technology, Jun. 2003.
"CDMA Digital CAI Standard, Cellular System Dual-Mode Mobile Station-Base Station Compatability Standard, Rev. 1.11", Feb. 5, 1992, Bates Nos. QBB148827-9062.
Digital and Ericsson Agree on Data Network Project, Wall Street Journal, p. B4, Oct. 8, 1991.
"Ericsson and General Electric Going Mobile," Telephone Engineer & Management News, pp. 30-39, Oct. 1, 1989.
"Man-Machine Interface of the Mobile Station," GSM 02.30 v. 3.9.0, Feb. 1992, QBB155113-155137.
"Messenger User Guide," Cognito Limited, Apr. 1991.
"Mobile Station Features," Recommendation GSM 4.4.2, Oct. 1993.
"Mobilt Datanät om tvÅ År" (Mobile Datanet in Two Years), Elteknik Med. Eknuell Electronik, V. 8, p. 6, 1985.
"Radio Networks-An Air Bridge for Data," 1989.
"Random Access Procedures,"GSM 04.06, v. 3.6.0, 1992.
Release Note, Recommendation GSM 03.20, Security Related Network Functions, v. 3.3.2, Jan. 1991.
Release Note, Recommendation, Mobile Station Features, GSM 02.07, v. 3.3.0, Mar. 1990.
Release Note, Recommendation, Man-Machine Interface of the Mobile Station, GSM 02.30, v. 3.5.0, Mar. 1990.
"Standards: Ericsson," Communications International 1991, p. 46, Sep. 1991.
"The Second Overseas Radio Wave Utilization System Investigation Committee Report," Kaigai Denpa Rioy Shisutemu Chosadan Hokokusho, Dai2kai, Showa, Abstract, 1987.
"Trögt för Mobitex" (Delays for Mobitex), Elteknik Med. Aktuell Elektronik, vol. 3, pp. 19-21, 1987.
"Update on Ardis-Mobitex Radio Modem Competition," Newsbyte News Network, Oct. 2, 1991.
"Waiting Time for Wireless," Computerworld, pp. 73-75, Oct. 15, 1990.
Agere v. Broadcom Memorandum & Order, Jul. 20, 2004, Bates Nos. BCMITC00000256573-667.
Balston, Cellular Radio Systems, 1993.
Broadcom's Third Supplemental Objections and Responses to Qualcomm's First Set of Interrogatories (1-53), Dec. 29, 2005.
Cellular Digital Packet Data System Specification Release 1.0—Book 1, N/a, Jul. 19, 1993.
Cellular System Dual-Mode Station—Base Station Compatibility Standard, EIA/TIA/IS-54, May 1, 1990.
Change Request (Phase 2) Nos. 17, Tdoc GSM 195/93, Feb. 1992, Bates Nos. QBB222315-319.
ETSI Radio Equipment and Systems (RES); Digital Equipment Cordless Telecommunications (DECT) Common Interface Part 1: Overview, ETS 300 175-1, Oct. 1, 1992.
ETSI Radio Equipment and Systems (RES); Digital Equipment Cordless Telecommunications (DECT) Common Interface Part 2: Physical Layer, ETS 300 175-2, Oct. 1, 1992.
ETSI Radio Equipment and Systems (RES); Digital Equipment Cordless Telecommunications (DECT) Common Interface Part 3: Medium Access Control Layer, ETS 300 175-3, Oct. 1, 1992.
ETSI Radio Equipment and Systems (RES); Digital Equipment Cordless Telecommunications (DECT) Common Interface Part 4: Data Link Control Layer, ETS 300 175-4, Oct. 1, 1992.
ETSI Radio Equipment and Systems (RES); Digital Equipment Cordless Telecommunications (DECT) Common Interface Part 6: Identities and Addressing, ETS 300 175-6, Oct. 1, 1992.
ETSI Radio Equipment and Systems (RES); Digital Equipment Cordless Telecommunications (DECT) Common Interface Part 7: Security Features, ETS 300 175-7, Oct. 1, 1992.
ETSI Radio Equipment and Systems (RES); Digital Equipment Cordless Telecommunications (DECT) Common Interface Part 8: Speech Coding and Transmission, ETS 300 175-8, Oct. 1, 1992.
ETSI Radio Equipment and Systems (RES); Digital Equipment Cordless Telecommunications (DECT) Common Interface Part 9: Public Access Profile, ETS 300 175-9, Oct. 1, 1992.
ETSI Handbook Guide to the Application of the PNE Rules to the Drafting and Presentation of ETSI Standards v 1.3, May 1990.
Fast and Scalable Handoffs for Wireless Internet Works, Proceedings of the 2nd Annual International Conference on Mobile Computing and Networking (Rye, NY), pp. 56-66, 1996.
File History of U.S. Appl. No. 08/027,140, Bates Nos. BCMITC00007895531-664, Mar. 5, 1993.
File History of U.S. Appl. No. 08/101,254, Bates Nos. BCMITC00007895836-978, Aug. 3, 1993.
File History of U.S. Appl. No. 08/114,872, Bates Nos. QBB220620-1242, Aug. 31, 1993.
File History of U.S. Appl. No. 08/431,077, Bates Nos. BCMITC00007895734-862 Apr. 27, 1995.
File History of U.S. Appl. No. 08/487,608, Bates Nos. BCMITC00007821166-658, Jun. 7, 1995.
File History of U.S. Appl. No. 08/513,645 ('983 file history), Bates Nos. BCMITC000071866-72400, Aug. 11, 1995.
File History of U.S. Appl. No. 09/060,287 ('311 file history), Bates Nos. BCMITC000071327-71665, Apr. 14, 1998.
General on Terminal Adaptation Functions for the MSs, GSM 07.01 v 3.14.0, Apr. 1, 1992.
GSM PLMN Connection Types, GSM 03.10 v 3.3.0, Feb. 1992.
Haine, "A New Radio Access Protocol and Network Architecture for Mobile Packet Data," Proc. Of Vehicular Technology Conference, pp. 1-15, May 19-22, 1991.
Henderson, "Public Data Networks: The Mobitex System," Paper Presented At the IEEE Vehicle Navigation and Information Systems Conference (VNIS '89), pp. 365, 1989.
Noll, "Introduction to Telephones and Telephone Systems," 3rd Edition, 1998.
Ruhlsmark, Generic Design Specification Jane Pocket Telephones, Dec. 22, 1992, Bates No. E 00 0745C-0778C.

Katarina Standard Cell Specification, Aug. 12, 1992, Bates No. E 00 0087C-0242C.
Eatie Gate Array Specification, Jan. 24, 1992, Bates No. E 00 1498C-1620C.
Noll, "Landmobile and Marine Radio Technical Handbook," 1985.
Lee, Mobile Cellular Telecommunications Systems, 1989, Bates Nos. QBB147008-463.
List of Change Request Presented to SMH Plenary No. 6, Rev 1, SMG 305/93, Mar. 29, 1993.
Lycksell, "Mobitex, ett kommunikations-radionät för text, data och tal" (A Radio Communication Network for Text, Data and Speech), 1986.
Walker, Mobile Information Systems, 1990.
Mobile Radio Interface Layer 3 Specification, GSM 04.08 v 4.2.0, Oct. 1992, Bates Nos. QBB479485-977.
Mobile Radio Interface Layer 3 Specification; Core Network Protocols; Stage 3, ETSI TS 124008 v. 5.3.0, 2002.
Mobile Station—Land Station Compatibility Specification, EIA/TIA-553, Sep. 1, 1989.
Mobitex Operators Association, "Mobitex Terminal Specification to Be Used With Cantle Mobitex Radio Network Issue R1A 8000 bps," Feb. 23, 1990.
Mouly, The GSM, System for Mobile Communications, 1992.
MS-BSS Interface—General Aspects and Principles, GSM 04.01 v 3.0.01, Feb. 1992, Bates Nos. QBB155198-155206.
Mobitex Operators Association, "Addendum Battery-Saving Protocol for Portable Terminals," Aug. 17, 1990.
Network Functions, GSM 03.01 v 3.0.0, Feb. 1992, Bates Nos. QBB155138-155152.
Radio Data Link Access Procedure published by Motorola, Mar. 1991.
Radio Equipment and Systems (RES); Digital ESTI Radio Equipment and Systems (RES); Digital Equipment Telecommunications (DECT) Common Interface Part 5: Network Layer, ETS 300 175-5, Oct. 1, 1992.
Rothblatt, Radiodetermination Satellite Services and Standards, 1987.
Notice Regarding Issuance of Initial Determination and Recommended Determination on Remedy and Bond, Oct. 10, 2006.
Recommended Minimum Performance Standards for 800 MHz Dual mode Mobile Stations, EIA/TIA/IS-55, Dec. 1, 1991, Bates Nos. QBB149924-150025.
Robert Meier Deposition Transcript, Nov. 18, 2005.
Service Accessibility—Change Request, GSM 02.11 v 3.6.0, Jan. 14, 1992.
Service Accessibility—Change Request, GSM 02.11 v 4.0, Feb. 6, 1992.
Service Accessibility—GSM 02.11 v 4.3.0, Oct. 1992.
Service Accessibility—GSM 02.11 v 4.5.0, Apr. 1993, Bates Nos. QBB153507-515.
Service Accessibility, ETSI TS 122 011 v 6.4.0, Jan. 2004.
Smart Rf Wireless Data Microtransmitter AT86RF401, 1998.
SMH Meeting Report, Doc 255/92, Mar. 30, 1992.
Speech Processing Functions: General Description, GSM 06.01 v 3.0.0, Feb. 1992.
Stemm, "Vertical Handoffs in Wireless Overlay Networks," Mobile Networks and Applications 3, Abstract, 1998.
Steven Koenek Deposition Transcript, Nov. 15, 2005.
Sweden, Telecommunications (International Edition), vol. 25, No. 10, pp. 145-148, 1991.
Technical Manual Callmaster IMTS Series: MT-200 & MT-300, 1982.
Technical Realization of the Short Message Service—Point-to-Point, GSM 03.40 v. 3.5.0, Feb. 1992.
TIA-856 Spec., a High Rate Packet Data Air Interface Spec., Apr. 2004.
Types of Mobile Stations, GSM 02.06 v 3.2.0, Feb. 1992.
Ericsson—Company Report: Svenska International PLC, Investext Report No. 1152645, p. 2 of 2, Nov. 15, 1991.
Postheaving Brief of the Commission Investigative Staff, United States International Trade Commission, Apr. 3, 2006.
Rebuttal Expert Report of Ray Nettleton Regarding Validity of U.S. Patent Nos. 6,714,983 and 6,374,311 (redacted version), Dec. 15, 2005.
Invalidity Expert Report of Dr. John Proakis (redacted version), Dec. 5, 2005.
Jorfaei et. al., "Concept of On-Board-Processing Satellites," IEEE—ICUPC '92 Proceedings, pp. 391-394, Sep. 29, 1992-Oct. 2, 1992.
Seshadri et al., "Coded Modulation With Time Diversity, Unequal Error Protection, And Low Delay For The Rayleigh Fading Channel," IEEE—ICUPC '92 Proceedings, pp. 283-287, Sep. 29, 1992-Oct. 02, 1992.
Slimane et al., "Coded Quadrature Pulse-Overlapping Modulation Techniques For Personal Communications," IEEE—ICUPC '92 Proceedings, pp. 293-297, Sep. 29, 1992-Oct. 2, 1992.
Wang, "Coded Ber Performance In A Correlative Fading Channel," IEEE—ICUPC '92 Proceedings, pp. 126-130, Sep. 29, 1992-Oct. 2, 1992.
"Ericsson Wins Mobile Data Pact," Communications Week International, No. 21, p. 13, Jan. 26, 1989.
Rahl, A Short Look on Power Saving Mechanisms in the Wireless LAN Standard Draft IEEE Standard 802.11, Jan. 26, 1997, Bates No. QBB218363-368.
Mobitex System Description MTS02.1, Feb. 19, 1990.
Mobitex Network Layer for Terminals Appendix B MTS09A 2, Feb 18, 1990.
GSM 07.01 v 3.13.0, updated version, Apr. 1992.
Calhoun, Wireless Access and the Local Telephone Network, 1992.
Qualcomm Incorporated's Sixth Supplemental Objections and Responses To Complainant's First Set Of Interrogatories (Nos. 1-15), Dec. 9, 2005.
Yu, "Overview of EIA/TIA IS-41," IEEE 1992, pp. 220-224, 1992.
Qualcomm Incorporated's Sixth Supplemental Objections And Responses to Complainant's First Set of Interrogatories (Nos. 1-15), Dec. 9, 2005.
Kishine et al., "A 2.5 Gb/s Clock and Data Recovery IC With Tunable Filter Characteristics For Use in LAN's and WAN's," IEEE J.of Solid-State Circuits, vol. 34, No. 6, pp. 805-812, Jun. 1999.
Kral et al., "RF-CMOS Oscillators With Switched Tuning," Custom IC Conference, Santa Clara, CA, pp. 555-558, May 1998.
Kral, "A 2.4 GHz CMOS Frequency Synthesizer," UCLA Integrated Circuits And Systems Laboratory, Mar. 1998.
Second Supplemental Expert Report of Dr. John Proakis (redacted version), Feb. 9, 2006.
Lo, "A 1.5-V 900-MHz Monolithic CMOS Fast-Switching Frequency Synthesizer for Wireless Applications," Symposium on VLSI Circuits of Technical Papers, p. 235-241, 2000.
Alvarez, A Wide-Bandwidth Low-Voltage PLL for PowerPC Microprocessors, Symposium on VLSI Circuits Digest of Technical Papers, 1994.
Expert Report of Duane Rabe, Mar. 14, 2008.
Initial Expert Report of Tim A. Williams, Ph.D., Mar. 14, 2008.
Fisher, "Dual mode mobile unit for next generation digital narrow channel cellular telephone system," 38th IEEE Vehicular Tech. Conf., pp. 543-547, 1988.
Decision of Appeal 2007-1164 in the United States Court of Appeals for the Federal Circuit, *Broadcom Corporation v. International Trade Commission and Qualcomm Incorporated*, On appeal from the United States International Trade Commission in Investigation No. 337-TA-543, Decided Sep. 19, 2008.
Decision of Appeals 2007-1493, -1494, -1495, -1496, -1497, -1498, -1499, -1514, -1573, 2008-1004, -1008, -1010, -1012, -1013, -1015, -1018, -1019 in the United States Court of Appeals for the Federal Circuit, *Kyocera Wireless Corporation, et al. v. International Trade Commission and Broadcom Corporation*, On appeal from the United States International Trade Commission in Investigation No. 337-TA-543, Decided Oct. 14, 2008.
EIA/TIA Interim Standards, "Cellular System Dual-Mode Station—Base Station Compatibility Standard," Revision A, Mar. 1991, EIA/TIA/IS-54-A.
EIA/TIA Interim Standards, "Cellular System Dual-Mode Station—Base Station Compatibility Standard," Revision B, Apr. 1992, EIA/TIA/IS-54-B.

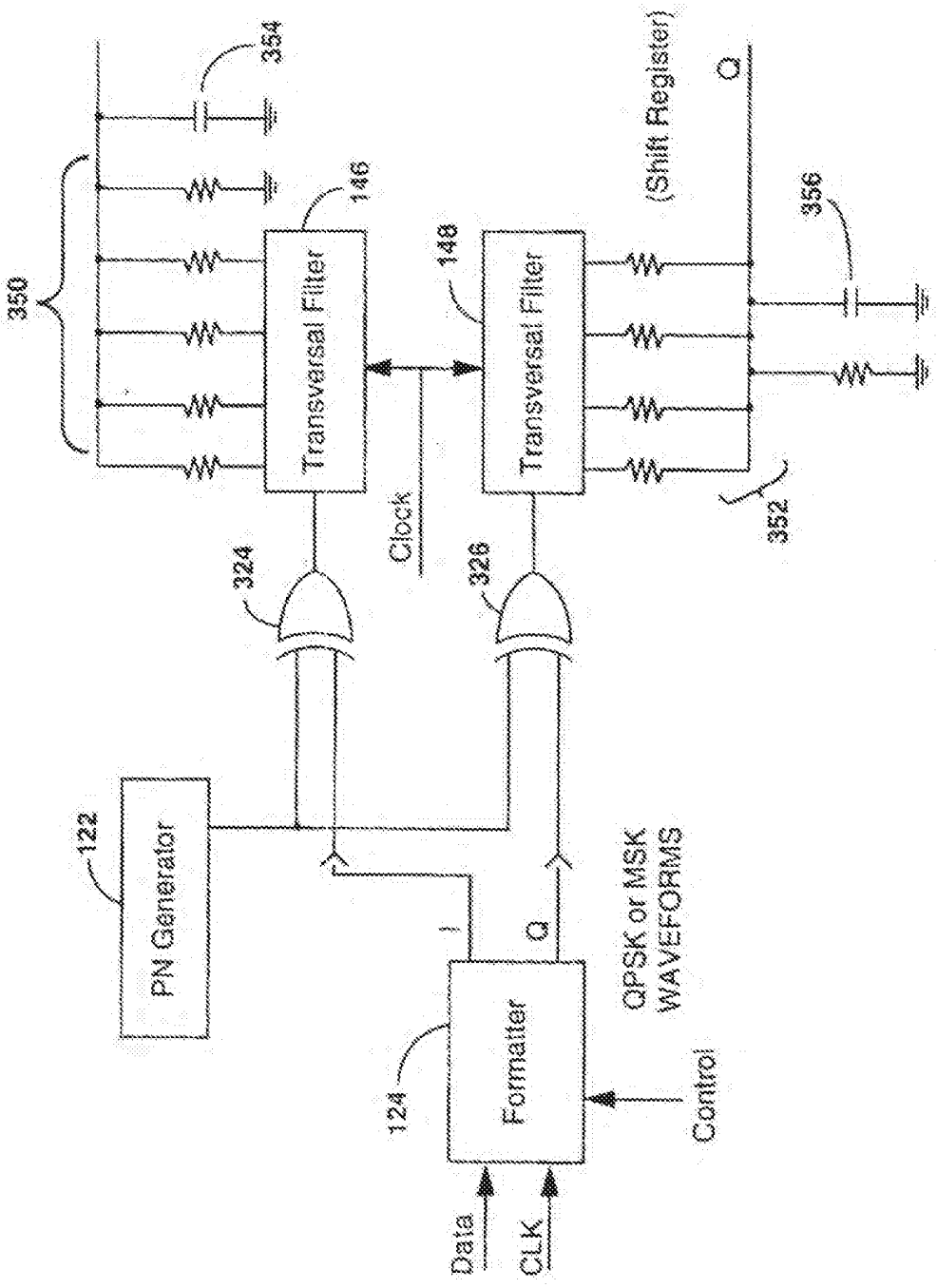
PN Generator
122
Formatter
124
Data
CLK
Control
I
Q
QPSK or MSK
WAVEFORMS
324
326
Clock
Transversal Filter
146
Transversal Filter
148
350
354
(Shift Register)
Q
356
352

FIG. 14B

Intel 8088 data sheet, Aug. 1990.
M68HC11 Reference Manual, Rev. 3.0, 1991.
Zilog Z80 Product Specification, Jan. 1978.
L. Kleinrock and F.A. Tobagi, "Packet Switching in Radio Channels; Part IV-Stability Considerations and Dynamic Control in Carrier Sense Multiple Access," IEEE Transactions on Communications, vol. COM-25, No. 10, Oct. 1977.
M. B. Pursley, "The Role of Spread Spectrum in Packet Radio Networks," Proceedings of the IEEE, vol. 75, No. 1, Jan. 1987.
J. O. Omunga and R. W. Donaldson, "Performance Analysis of CSMA with Priority Acknowledgements (CSMA/PA) on Noisy Data Networks with Finite User Population," IEEE Transactions on Communications, vol. 39, No. 7, Jul. 1991.
L. Kleinrock and J. Silvester, "Spatial Reuse in Multihop Packet Radio Networks," Proceedings of the IEEE, vol. 75, No. 1, Jan. 1987.
International Standard ISO/DIS 8802-2.2, Jun. 1, 1992.
A. S. Tanenbaum, "Computer Networks," Prentice Hall, Second Edition, Dec. 1988.
D.E. Comer, "Internetworking with TCP/IP", Prentice Hall, Dec. 1991.
Biba, A Hybrid Wireless MAC Protocol Supporting Asynchronous and Synchronous MSDU Delivery Services, IEEE P802.11/91-92 (Sep. 1991).
Cheah, A Proposed Architecture and Access Protocol Outline for the IEEE 802.11 Radio LAN Standards, Part II, Document IEEE P802.11/91-54 (Mar. 1991).
Cox, A Radio System Proposal for Widespread Low-Power Tetherless Communications, IEEE Transactions on Communications, vol. 39, No. 2 (Feb. 1991).
Natarajan et al., Battery Efficient Operation of Radio MAC Protocol, Document IEEE P802.11/91-102 (Sep. 1991).
Rypinski, Power-Drain Considerations for Full Time and Sleep Mode Radio Receivers, Document IEEE P802. 11/91-99 (Sep. 1991).
Robert Meier's Masters Thesis. Mobile Computer Network Architecture (May 1993).
Digital European Cordless Telecommunications Reference Document (Mar. 1991).
Haine, A New Radio Access Protocol and Network Architecture for Mobile Packet Data, 41st IEEE Ventricular Technology Conference (May 19-22, 1991).
Owen, The DECT Radio Interface, Colloquium on CT2/CA1 and DECT Cordless Telecommunications (1990).
Tuttlebee, Cordless Telecommunications in Europe (1990).

* cited by examiner

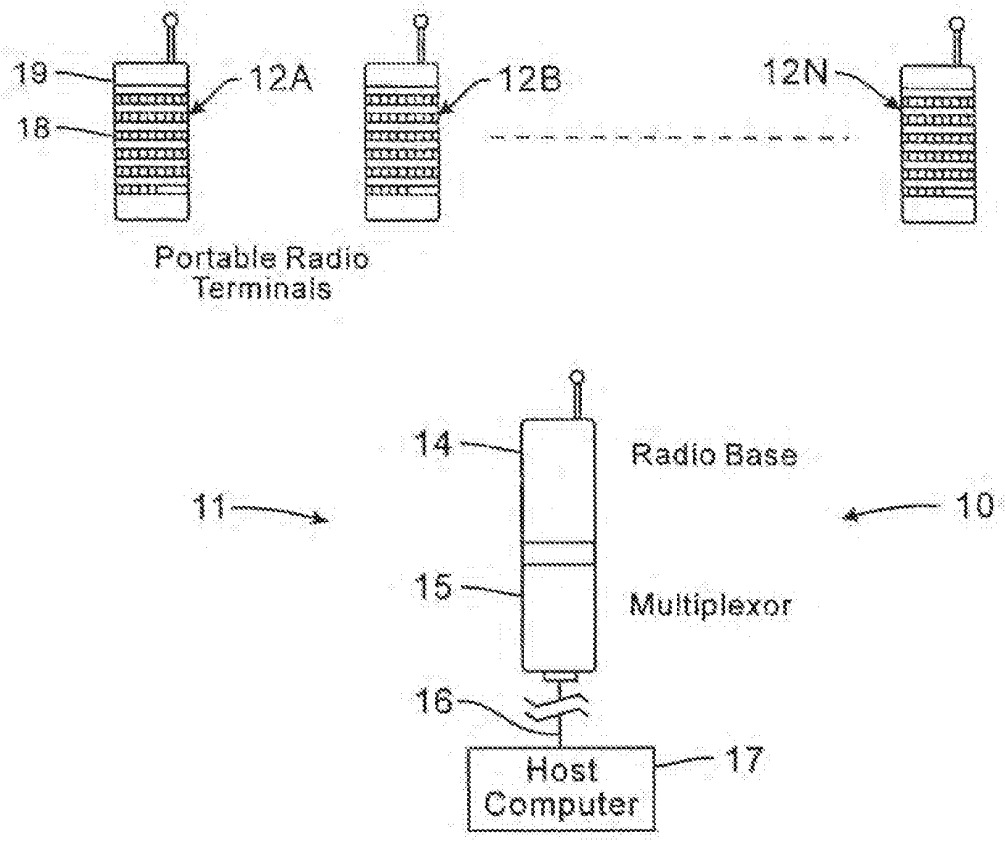

Fig. 1
(Prior Art)

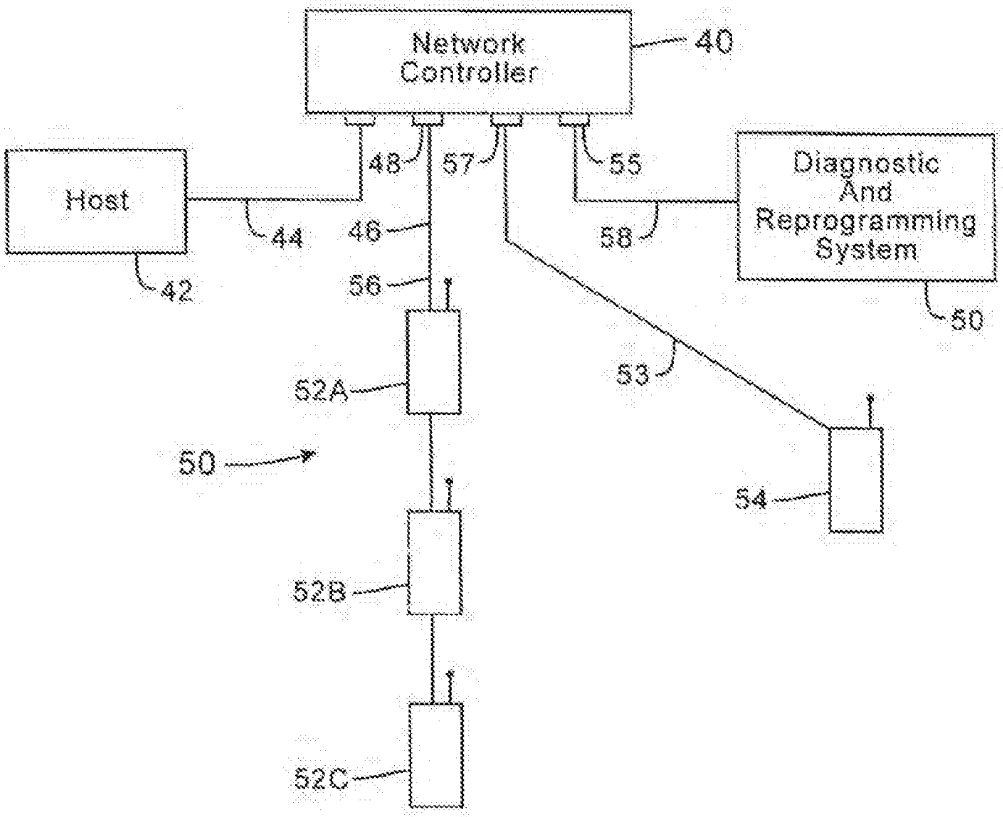
Network Controller
40
Host
42
44
48
57
55
46
58
Diagnostic And Reprogramming System
50
56
52A
53
50
54
52B
52C

Fig. 3

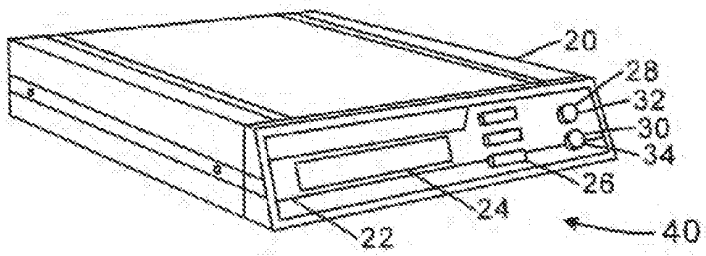
20
28
32
30
34
26
24
22
40

Fig. 2

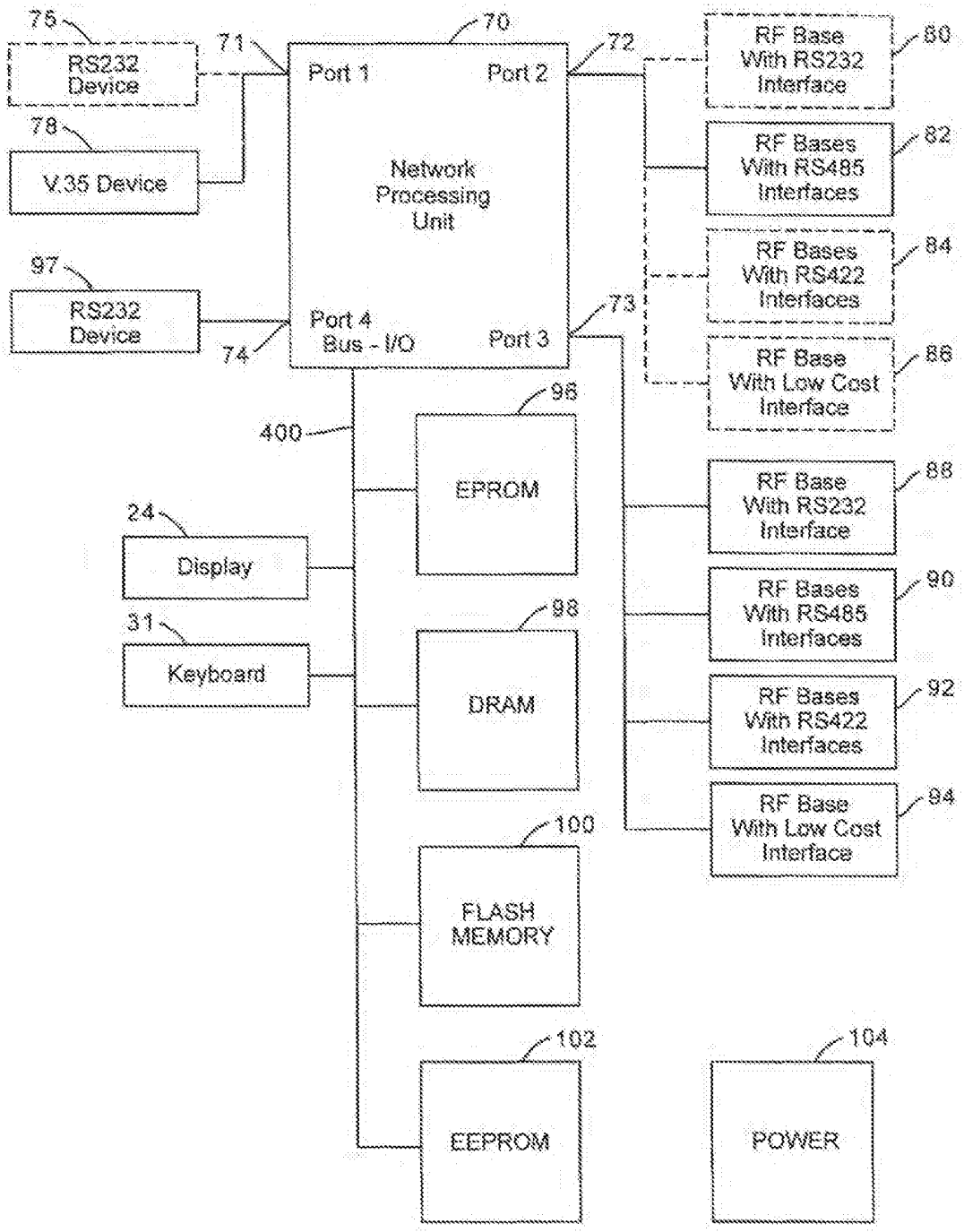
75
RS232 Device
71
70
Port 1
Port 2
72
RF Base With RS232 Interface
80
78
V.35 Device
Network Processing Unit
RF Bases With RS485 Interfaces
82
97
RS232 Device
Port 4 Bus - I/O
Port 3
74
73
RF Bases With RS422 Interfaces
84
RF Base With Low Cost Interface
86
400
96
EPROM
24
Display
31
Keyboard
98
DRAM
RF Base With RS232 Interface
88
RF Bases With RS485 Interfaces
90
RF Bases With RS422 Interfaces
92
RF Base With Low Cost Interface
94
100
FLASH MEMORY
102
EEPROM
104
POWER

Fig. 4

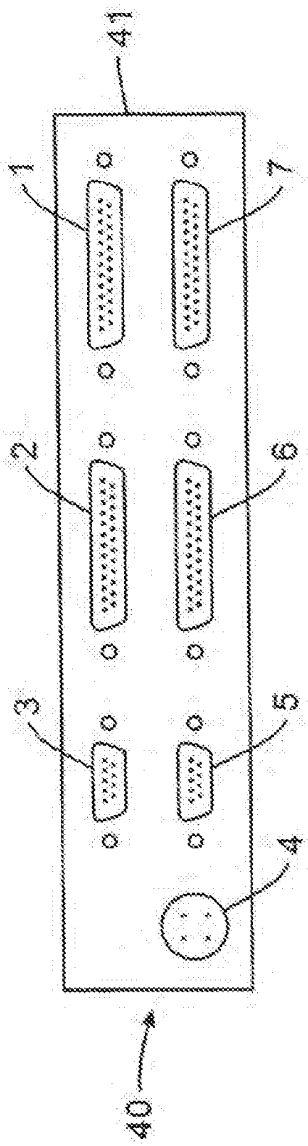
41
1
7
2
6
3
5
4
40

Fig. 5

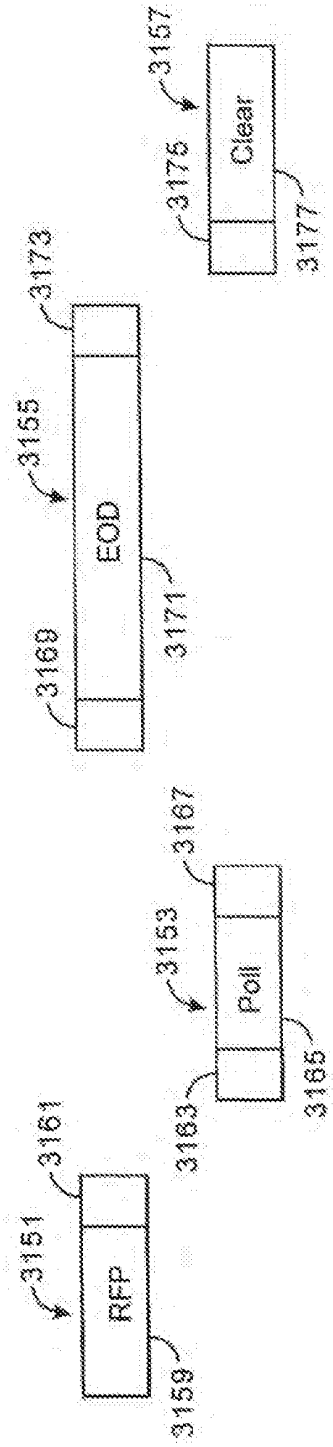
3157
Clear
3175
3177
3173
3155
EOD
3169
3171
3167
3153
Poll
3163
3165
3161
3151
RFP
3159

Fig.20

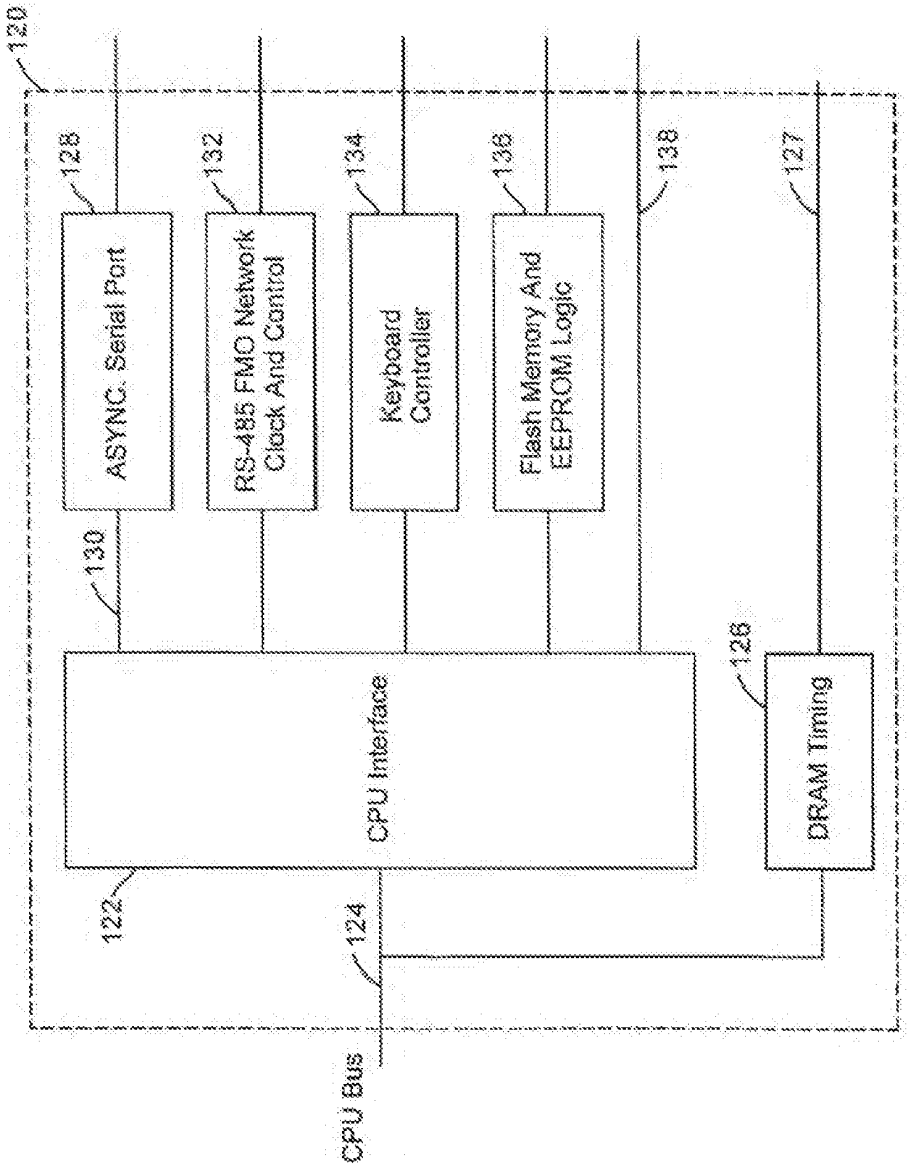
120
128
ASYNC. Serial Port
132
RS-485 FMO Network Clock And Control
134
Keyboard Controller
136
Flash Memory And EEPROM Logic
138
127
130
CPU Interface
126
DRAM Timing
122
124
CPU Bus

Fig.6

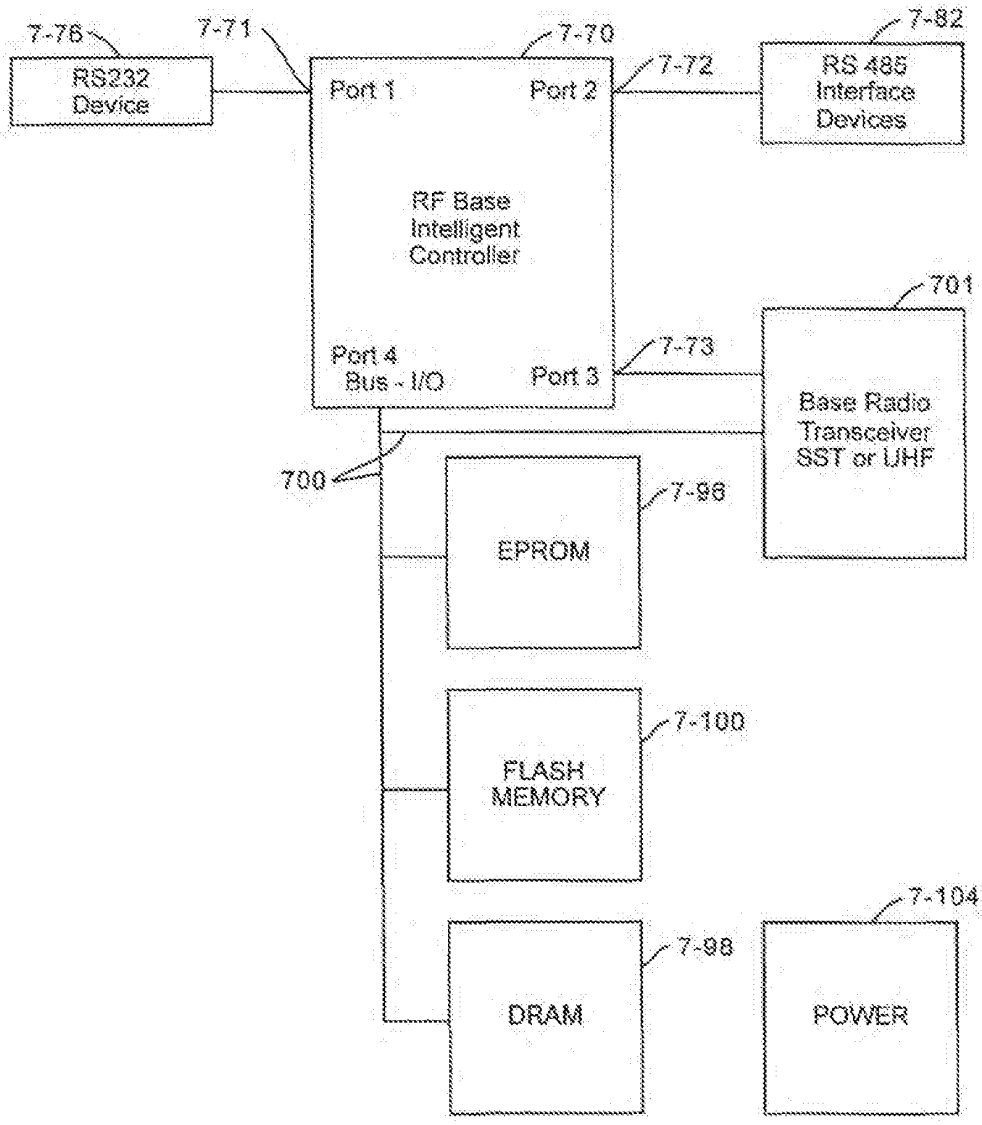
7-76
RS232 Device
7-71
7-70
Port 1
Port 2
7-72
7-82
RS 485 Interface Devices
RF Base Intelligent Controller
701
Port 4 Bus - I/O
Port 3
7-73
Base Radio Transceiver SST or UHF
700
7-96
EPROM
7-100
FLASH MEMORY
7-104
7-98
DRAM
POWER

Fig. 7

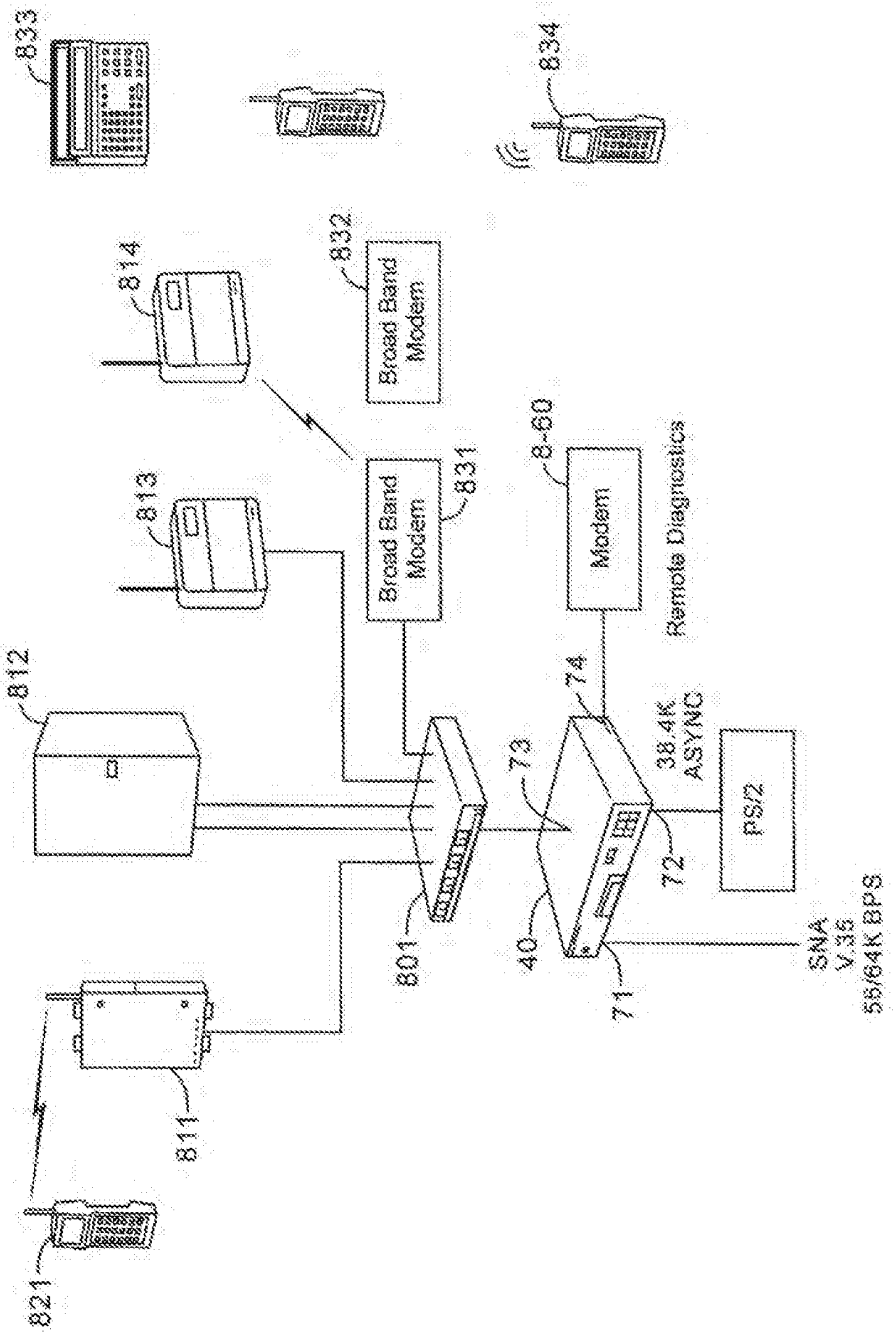
833
834
814
832
Broad Band Modem
813
Broad Band Modem
831
8-60
Modem
Remote Diagnostics
812
74
38.4K ASYNC
73
PS/2
72
801
40
71
SNA V.35 56/64K BPS
811
821

Fig.8

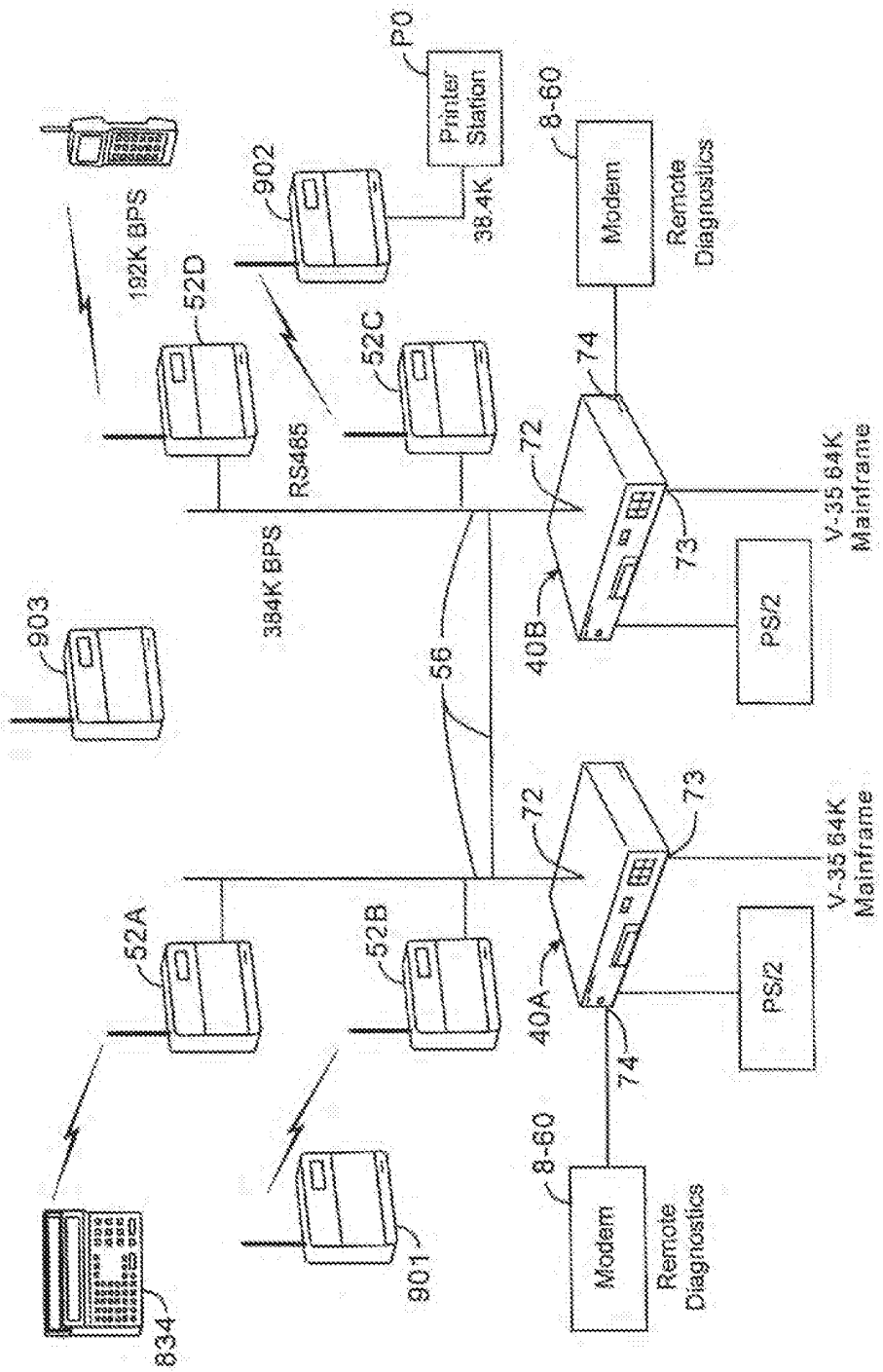
P0
Printer Station
8-60
Modem
Remote Diagnostics
902
38.4K
192K BPS
52D
52C
74
72
RS485
384K BPS
V-35 64K Mainframe
73
903
56
40B
PS/2
72
73
V-35 64K Mainframe
52A
52B
40A
PS/2
74
8-60
Modem
Remote Diagnostics
901
834

Fig.9

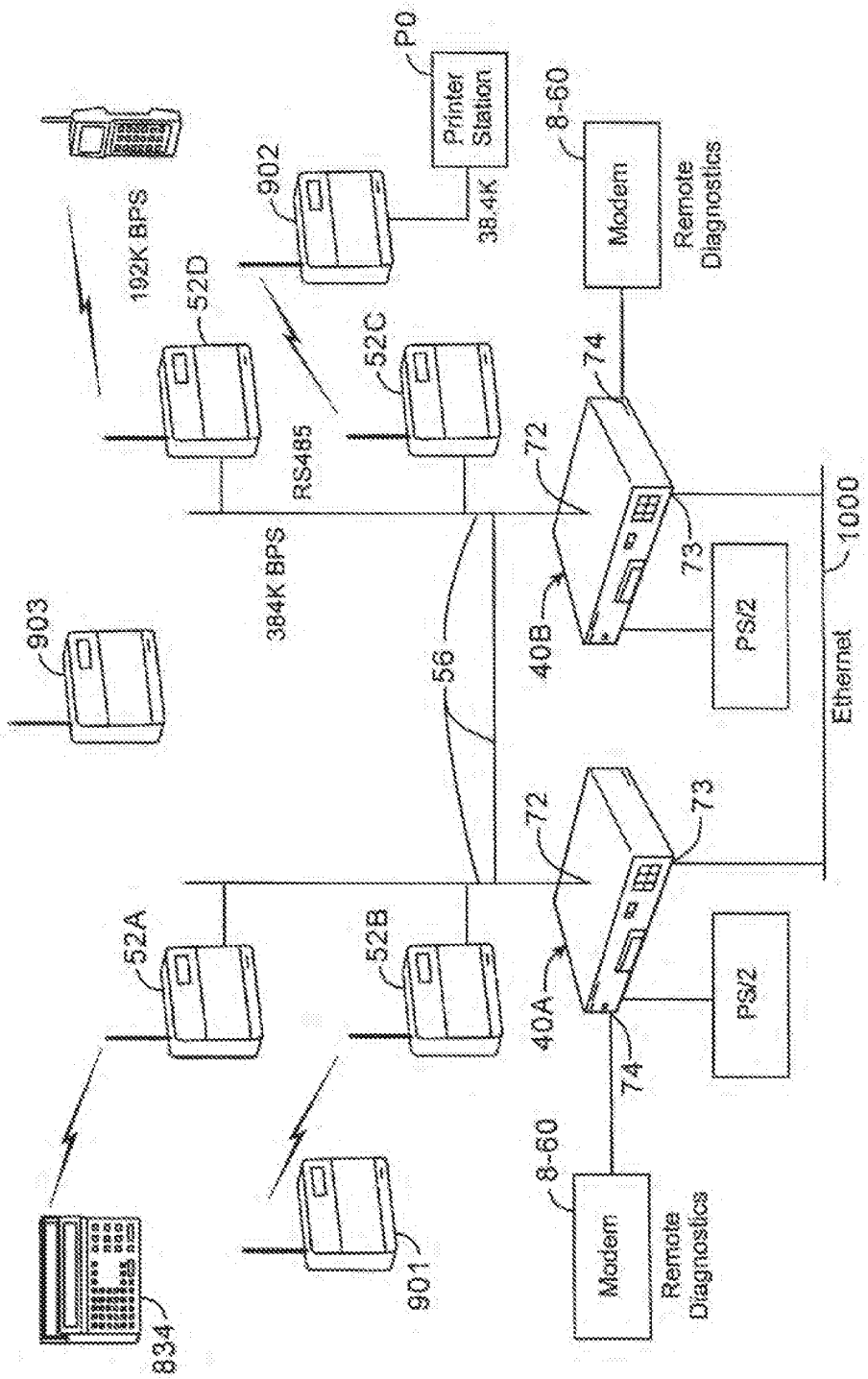
P0
Printer Station
38.4K
902
8-60
Modem
Remote Diagnostics
192K BPS
52D
52C
74
72
RS485
384K BPS
73
1000
903
56
40B
PS/2
Ethernet
72
73
52A
52B
40A
PS/2
74
8-60
Modem
Remote Diagnostics
834
901

Fig.10

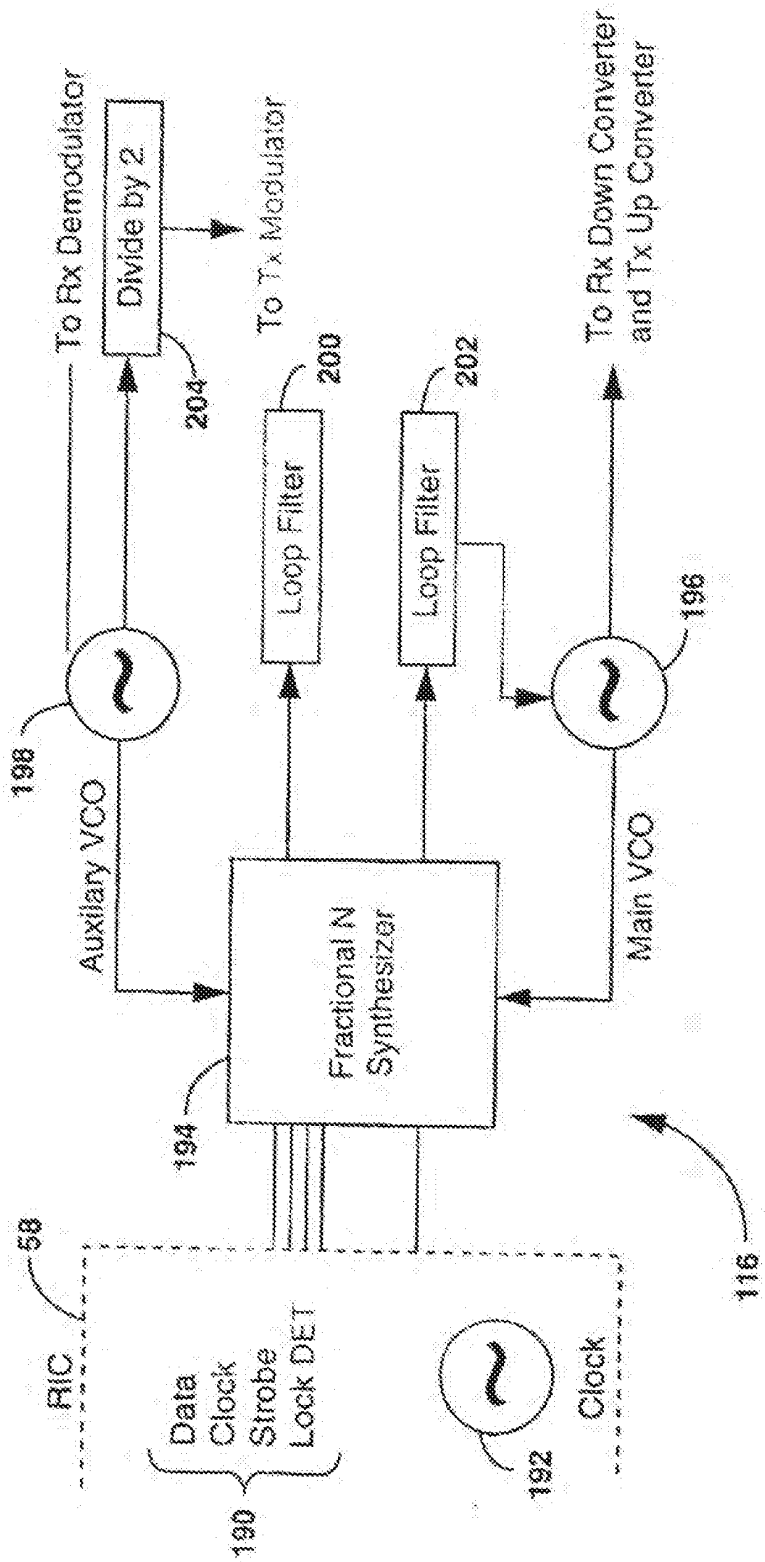
To Rx Demodulator
Divide by 2
To Tx Modulator
To Rx Down Converter and Tx Up Converter
204
200
202
Loop Filter
Loop Filter
198
196
Auxiliary VCO
Main VCO
Fractional N Synthesizer
194
116
58
RIC
Data
Clock
Strobe
Lock DET
190
192
Clock

FIG. 15

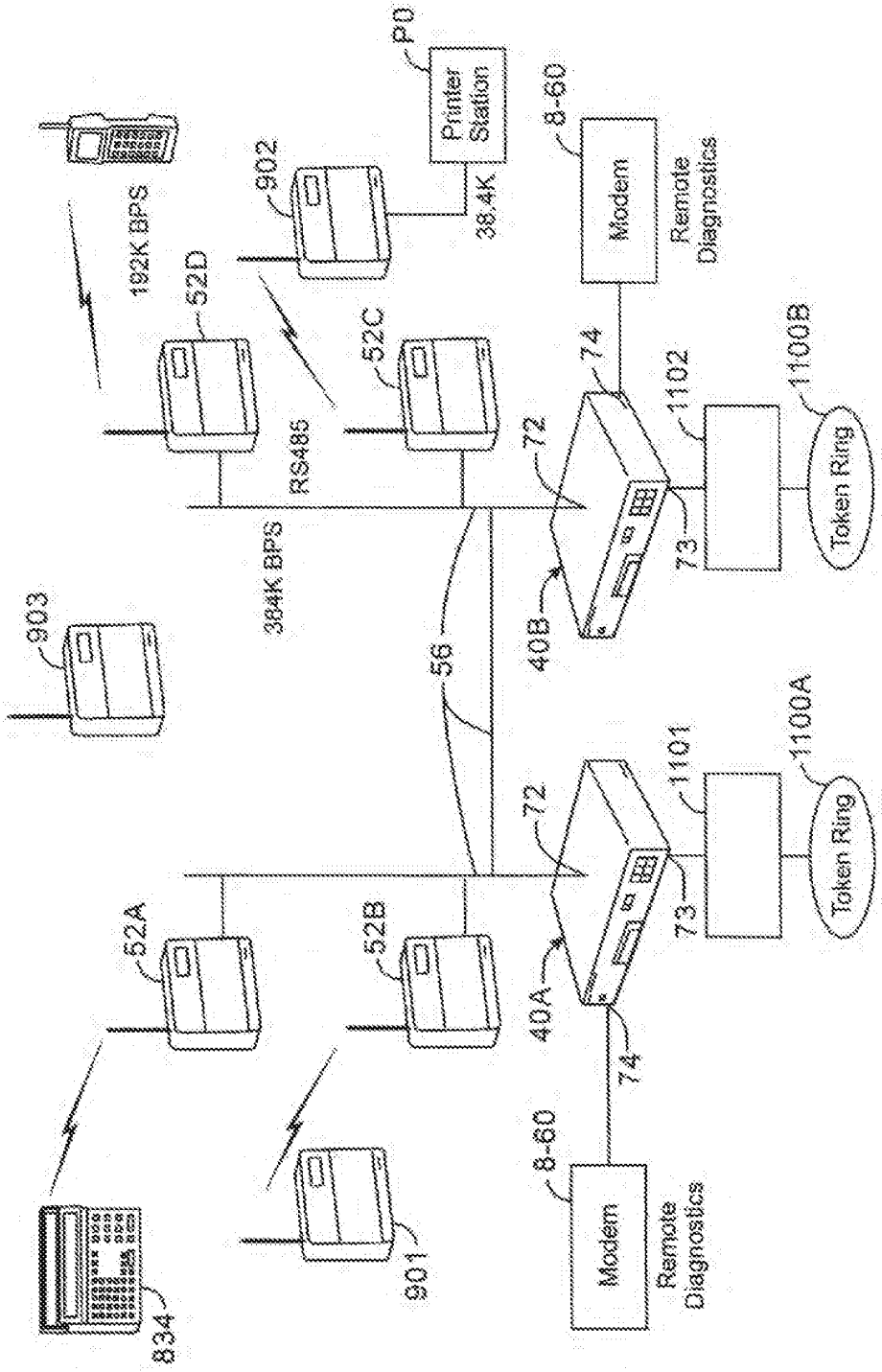
P0
Printer Station
38.4K
902
192K BPS
52D
52C
RS485
384K BPS
903
56
8-60
Modem
Remote Diagnostics
74
72
40B
1102
73
1100B
Token Ring
1101
1100A
40A
52A
52B
834
901

Fig. 11

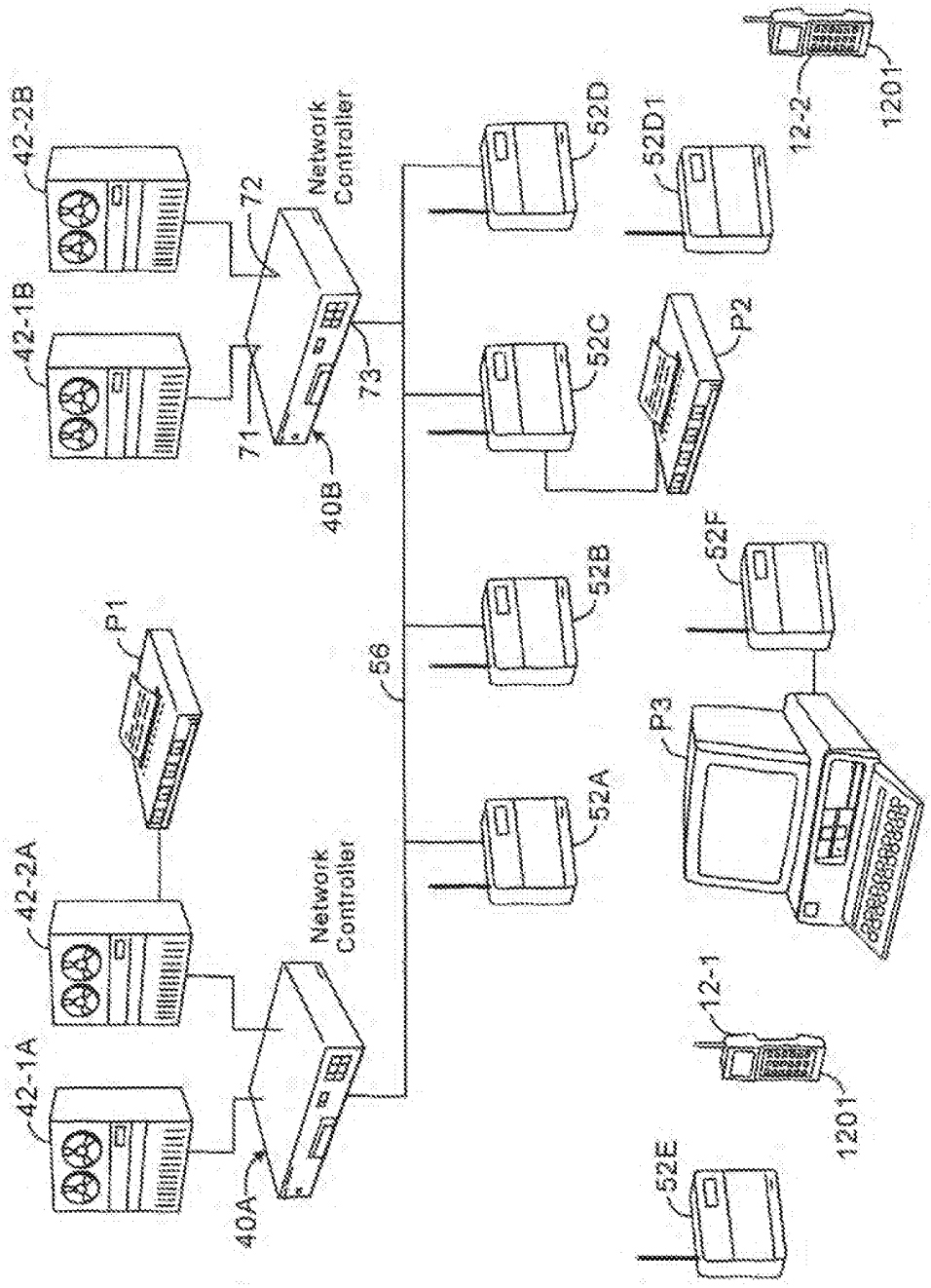
42-1A
42-2A
42-1B
42-2B
P1
Network Controller
Network Controller
40A
40B
71
72
73
56
52A
52B
52C
52D
52D1
52E
52F
P2
P3
12-1
12-2
1201
1201

Fig.12

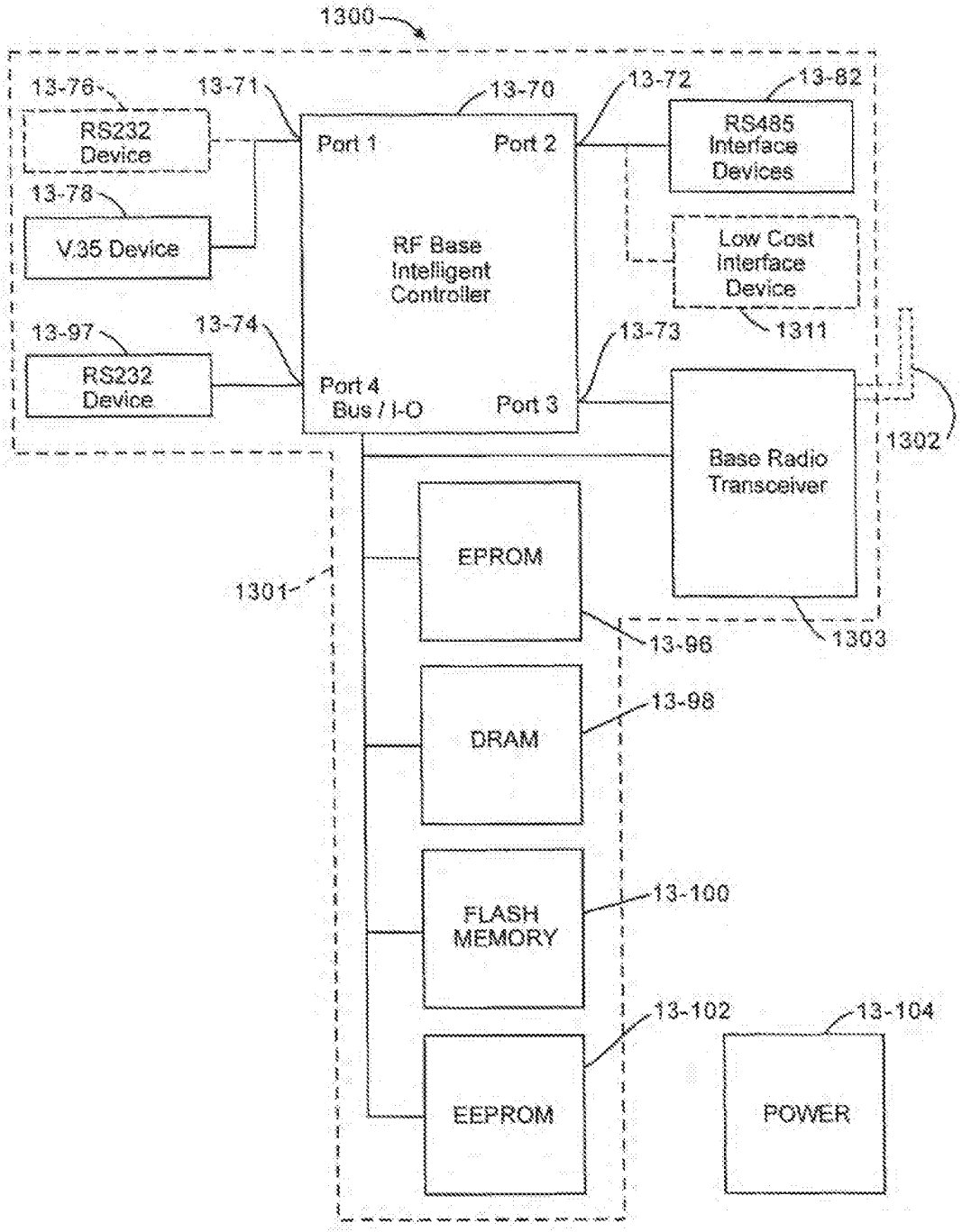
1300
13-76
RS232 Device
13-71
13-70
13-72
13-82
Port 1
Port 2
RS485 Interface Devices
13-78
V.35 Device
RF Base Intelligent Controller
Low Cost Interface Device
1311
13-97
13-74
13-73
RS232 Device
Port 4 Bus / I-O
Port 3
1302
Base Radio Transceiver
EPROM
1301
13-96
1303
DRAM
13-98
FLASH MEMORY
13-100
13-102
13-104
EEPROM
POWER

Fig. 13

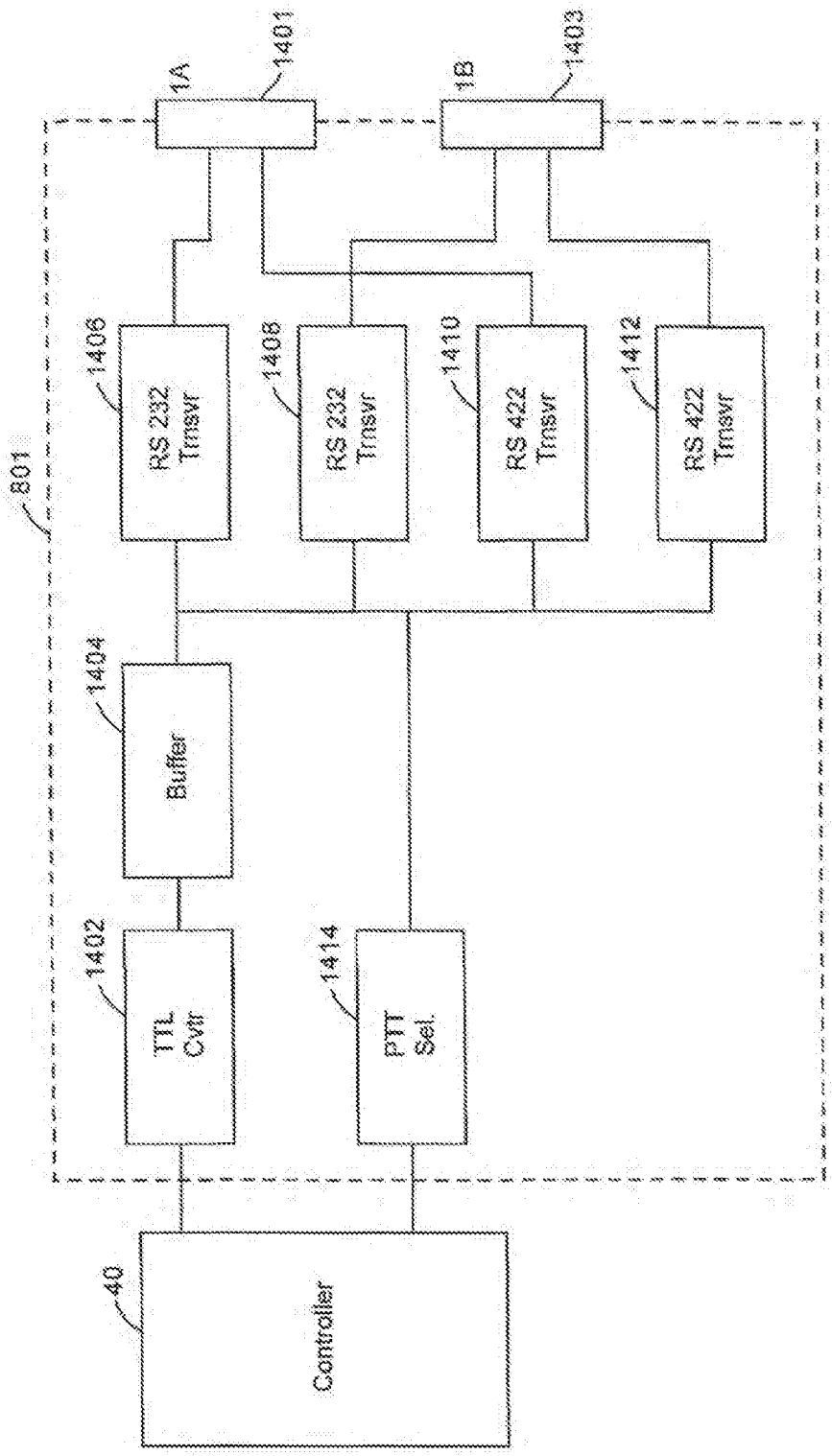
801
1A
1401
1B
1403
1406
RS 232 Trnsvr
1408
RS 232 Trnsvr
1410
RS 422 Trnsvr
1412
RS 422 Trnsvr
1404
Buffer
1402
TTL Cvtr
1414
PTT Sel.
40
Controller

Fig.14

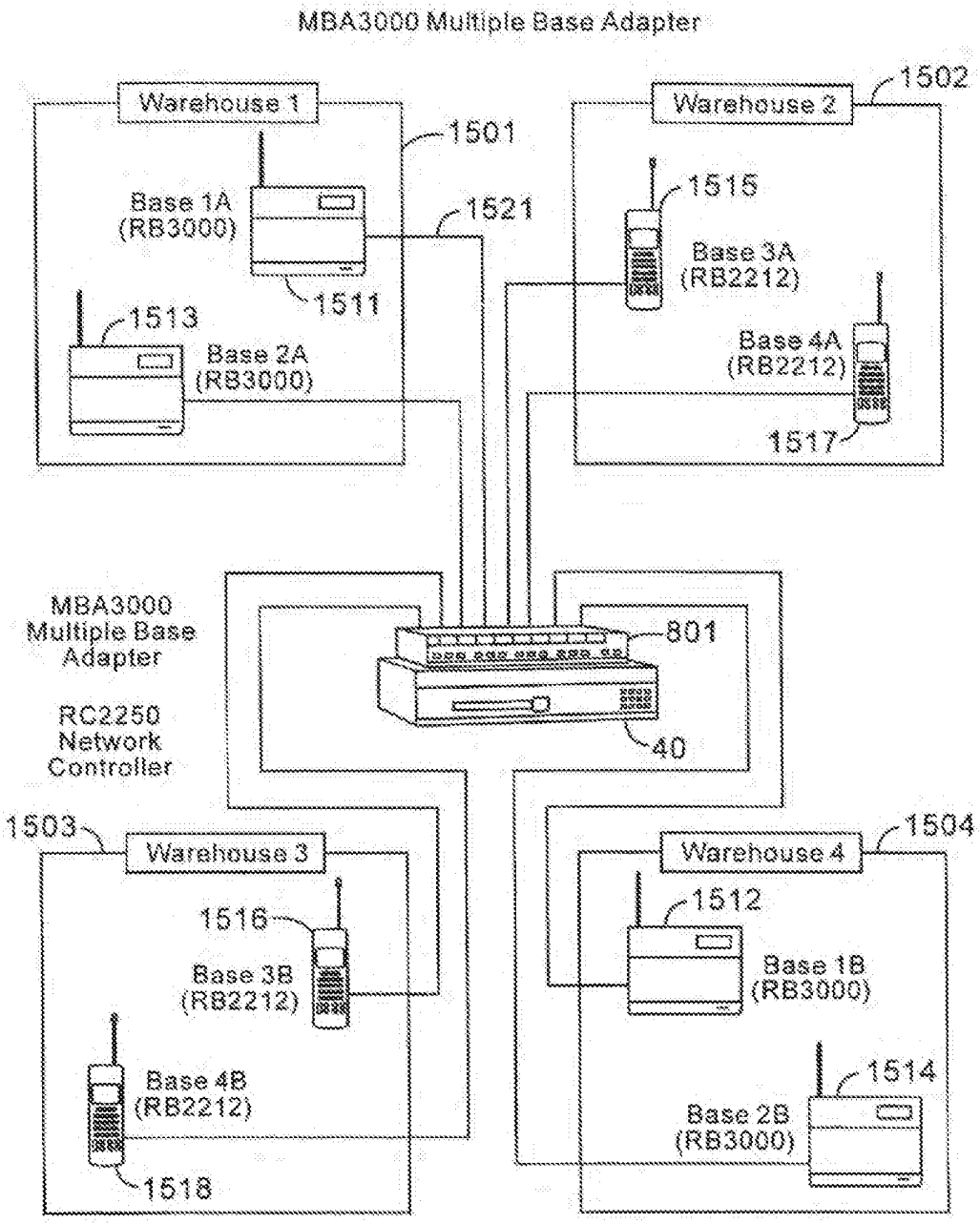
MBA3000 Multiple Base Adapter
Warehouse 1
1501
Base 1A
(RB3000)
1521
1511
1513
Base 2A
(RB3000)
Warehouse 2
1502
1515
Base 3A
(RB2212)
Base 4A
(RB2212)
1517
MBA3000
Multiple Base
Adapter
RC2250
Network
Controller
801
40
1503
Warehouse 3
1516
Base 3B
(RB2212)
Base 4B
(RB2212)
1518
Warehouse 4
1504
1512
Base 1B
(RB3000)
1514
Base 2B
(RB3000)

Fig. 15

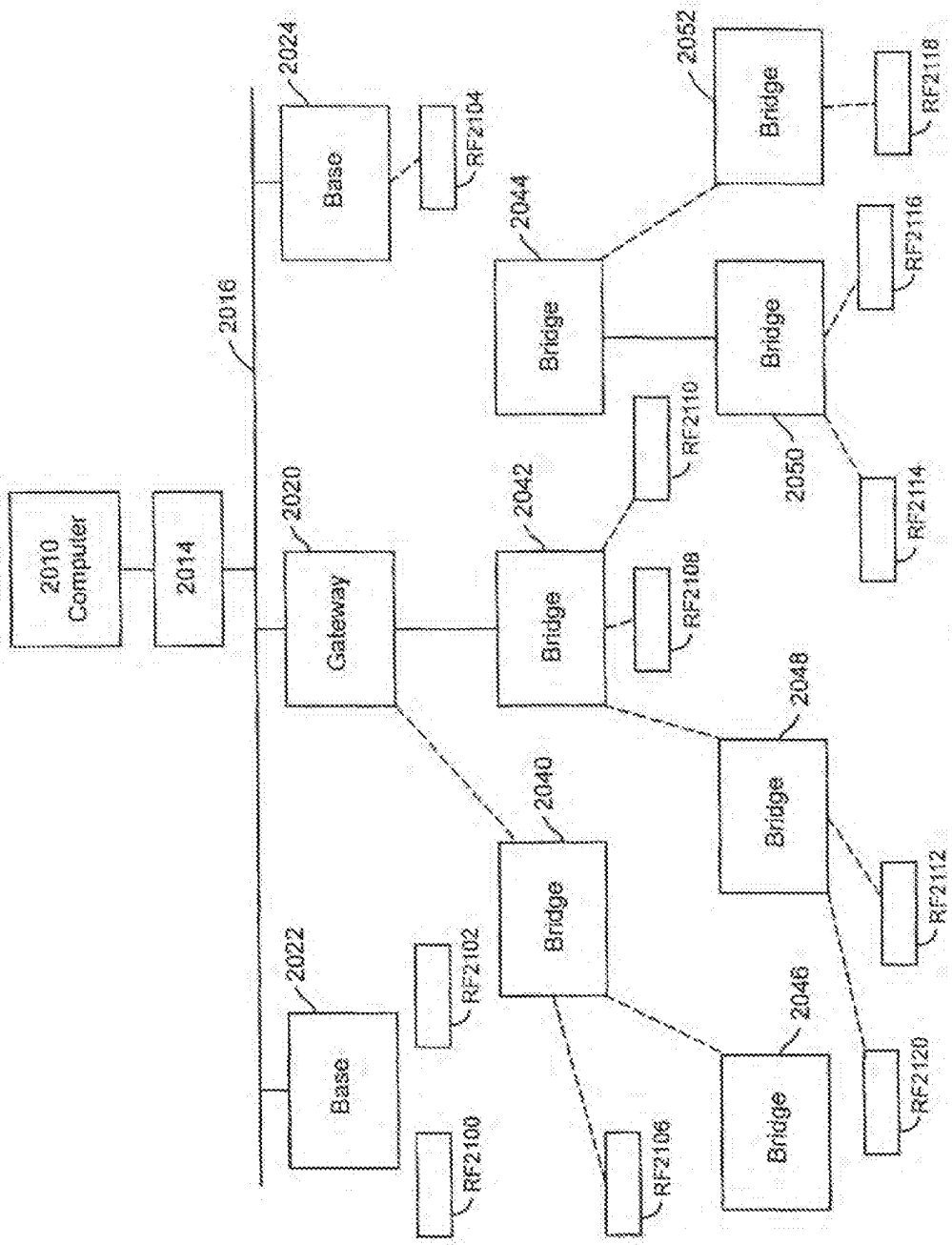
2010
Computer
2014
2016
2020
Gateway
2022
Base
2024
Base
2040
Bridge
2042
Bridge
2044
Bridge
2046
Bridge
2048
Bridge
2050
Bridge
2052
Bridge
RF2100
RF2102
RF2104
RF2106
RF2108
RF2110
RF2112
RF2114
RF2116
RF2118
RF2120

Fig. 16

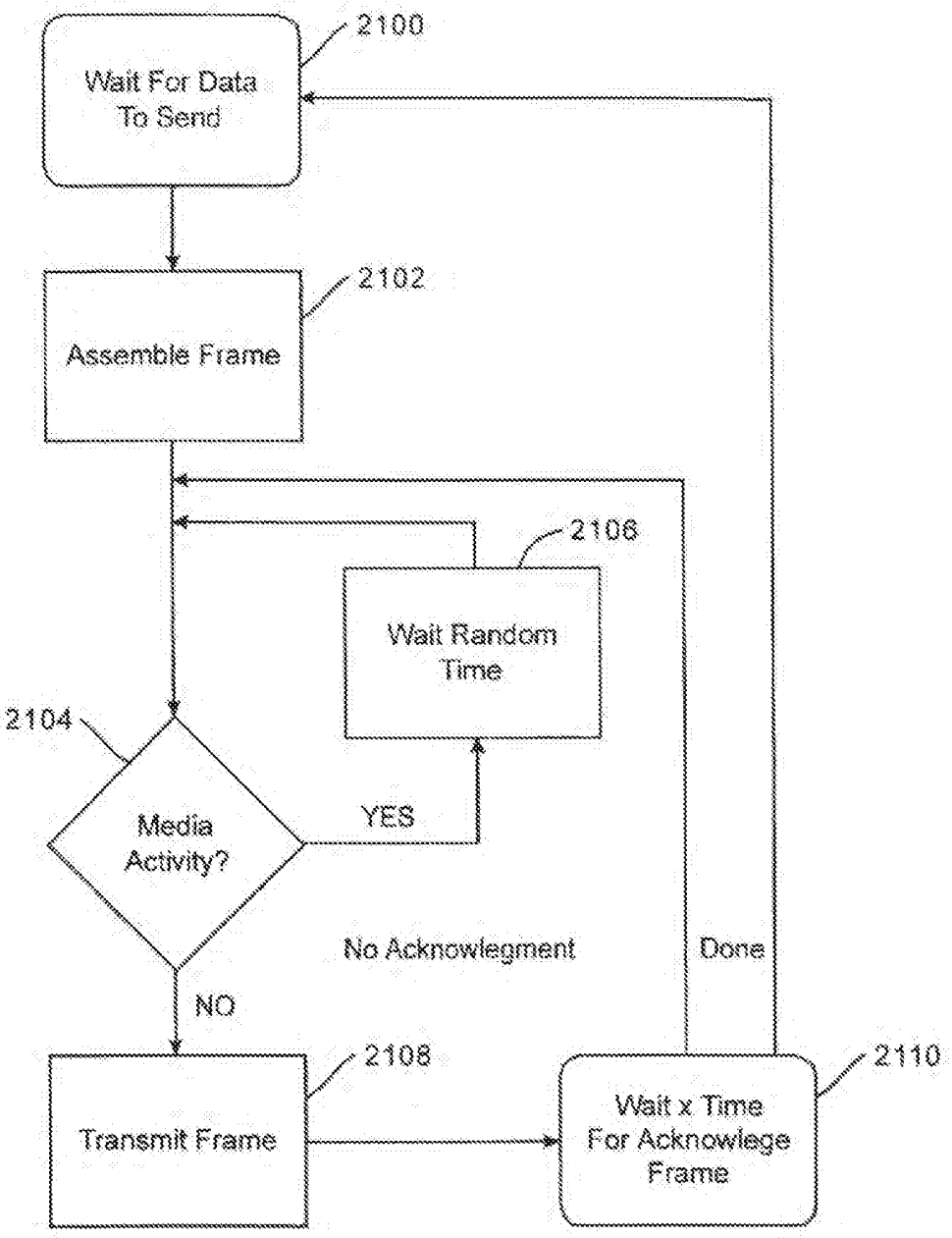
2100
Wait For Data To Send
2102
Assemble Frame
2106
Wait Random Time
2104
Media Activity?
YES
No Acknowlegment
Done
NO
2108
Transmit Frame
2110
Wait x Time For Acknowlege Frame

Fig. 17

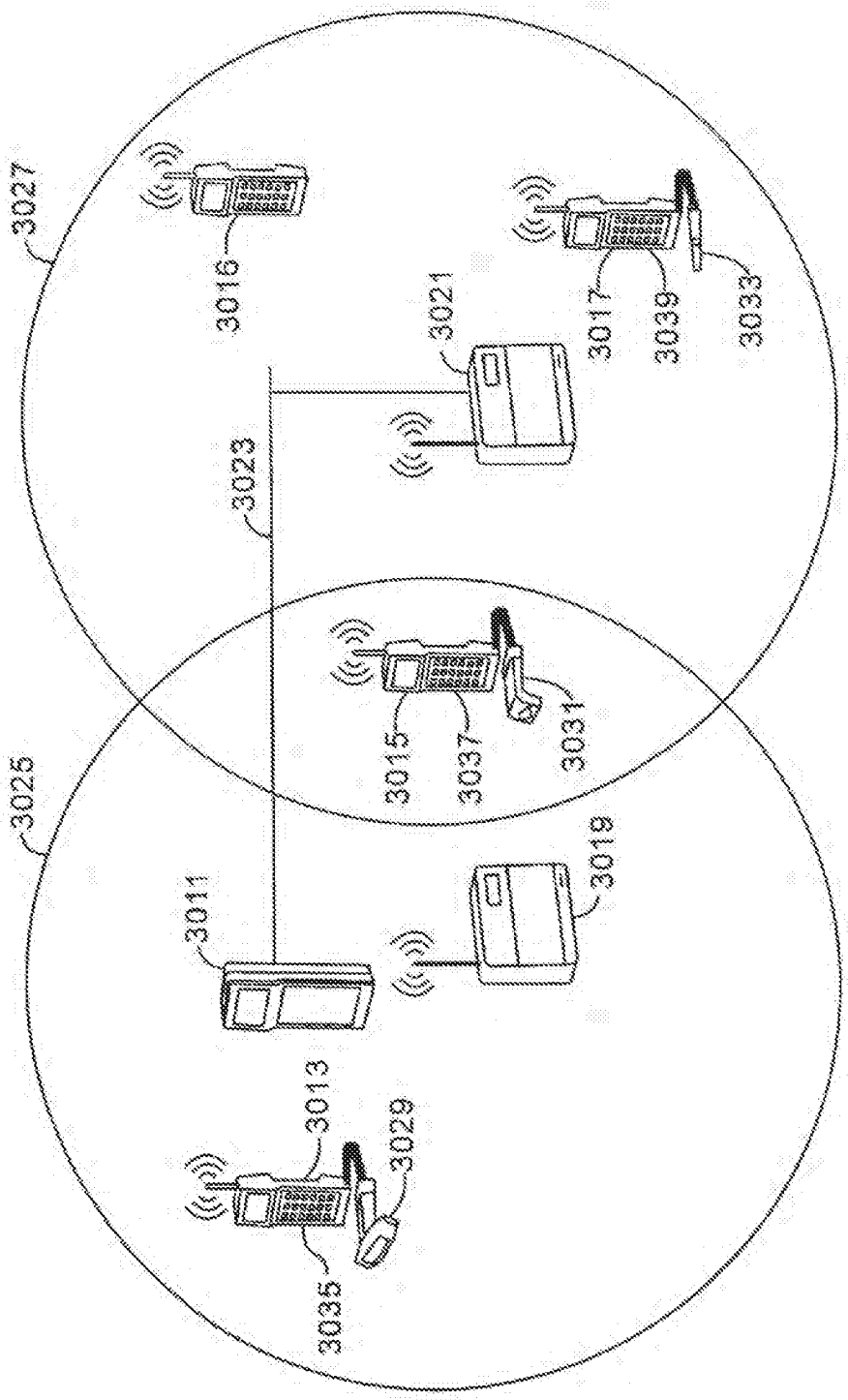
3027
3016
3021
3017
3039
3033
3023
3015
3037
3031
3025
3011
3019
3013
3029
3035

Fig.18

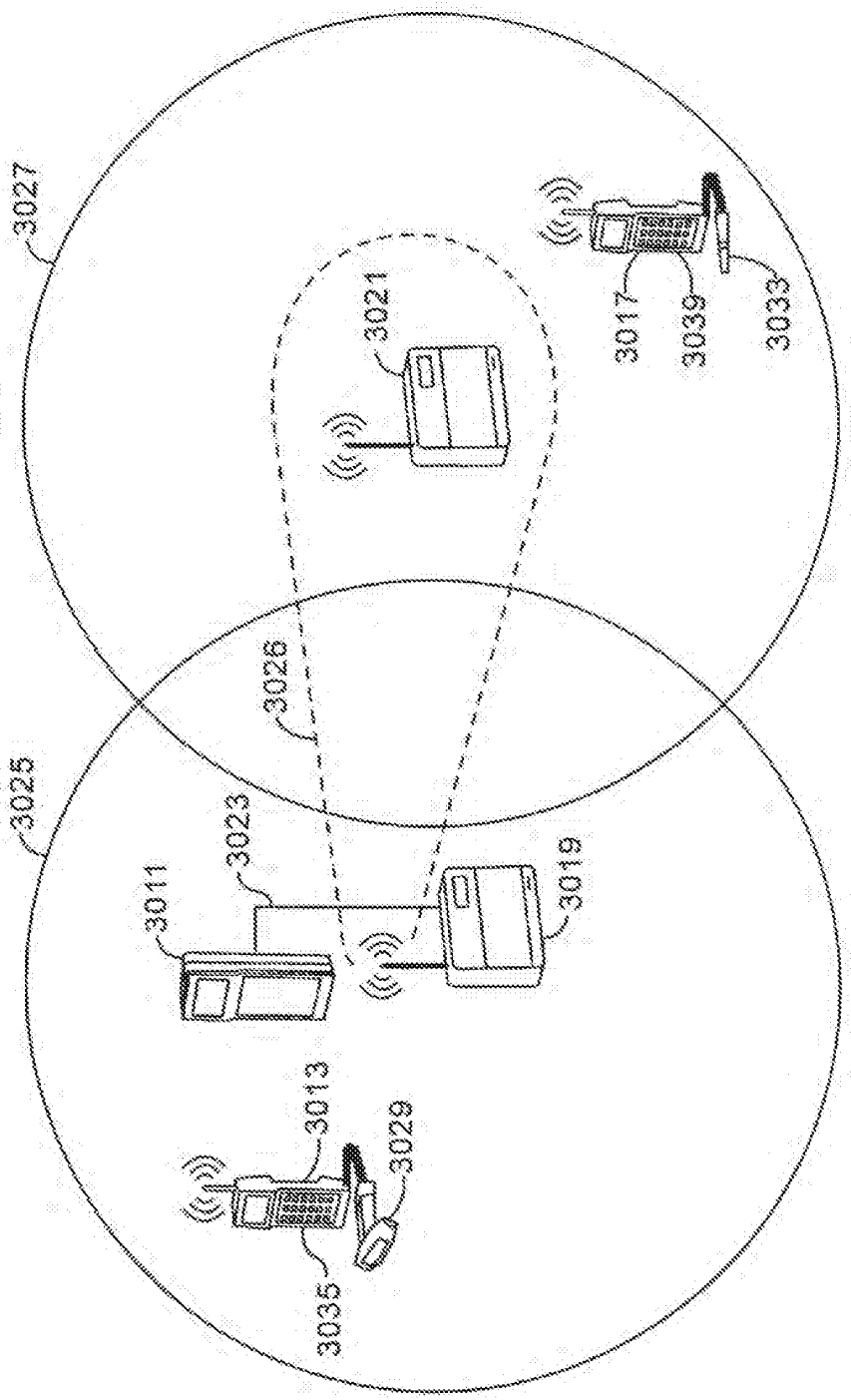
3027
3021
3017
3039
3033
3026
3025
3023
3011
3019
3013
3029
3035

Fig.18A

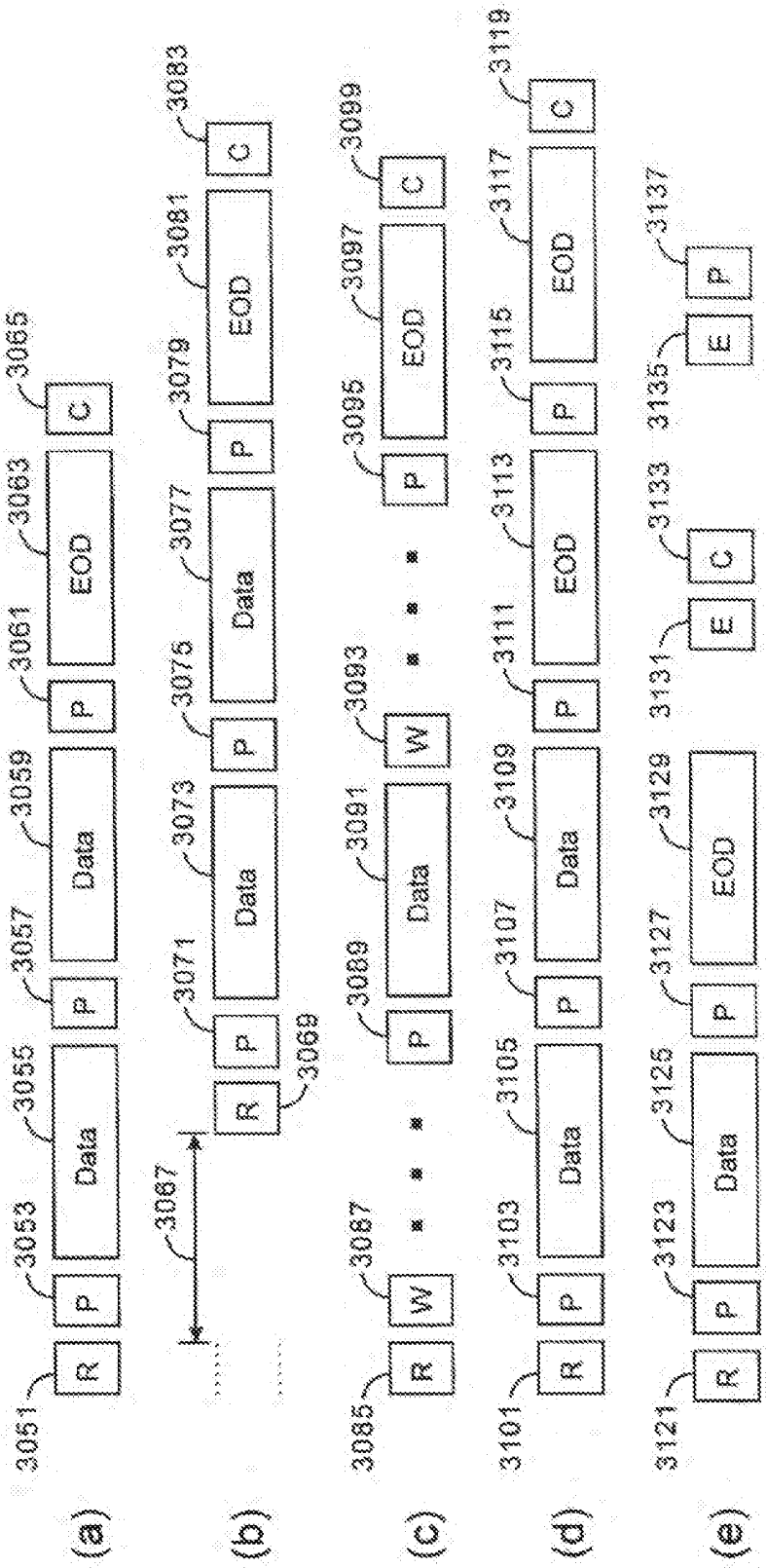
(a)
3051
R
3053
P
3055
Data
3057
P
3059
Data
3061
P
3063
EOD
3065
C
(b)
3067
R
3069
P
3071
Data
3073
P
3075
Data
3077
P
3079
EOD
3081
C
3083
(c)
3085
R
3087
W
3089
P
3091
Data
3093
W
3095
P
3097
EOD
3099
C
(d)
3101
R
3103
P
3105
Data
3107
P
3109
Data
3111
P
3113
EOD
3115
P
3117
EOD
3119
C
(e)
3121
R
3123
P
3125
Data
3127
P
3129
EOD
3131
E
3133
C
3135
E
3137
P

Fig. 19

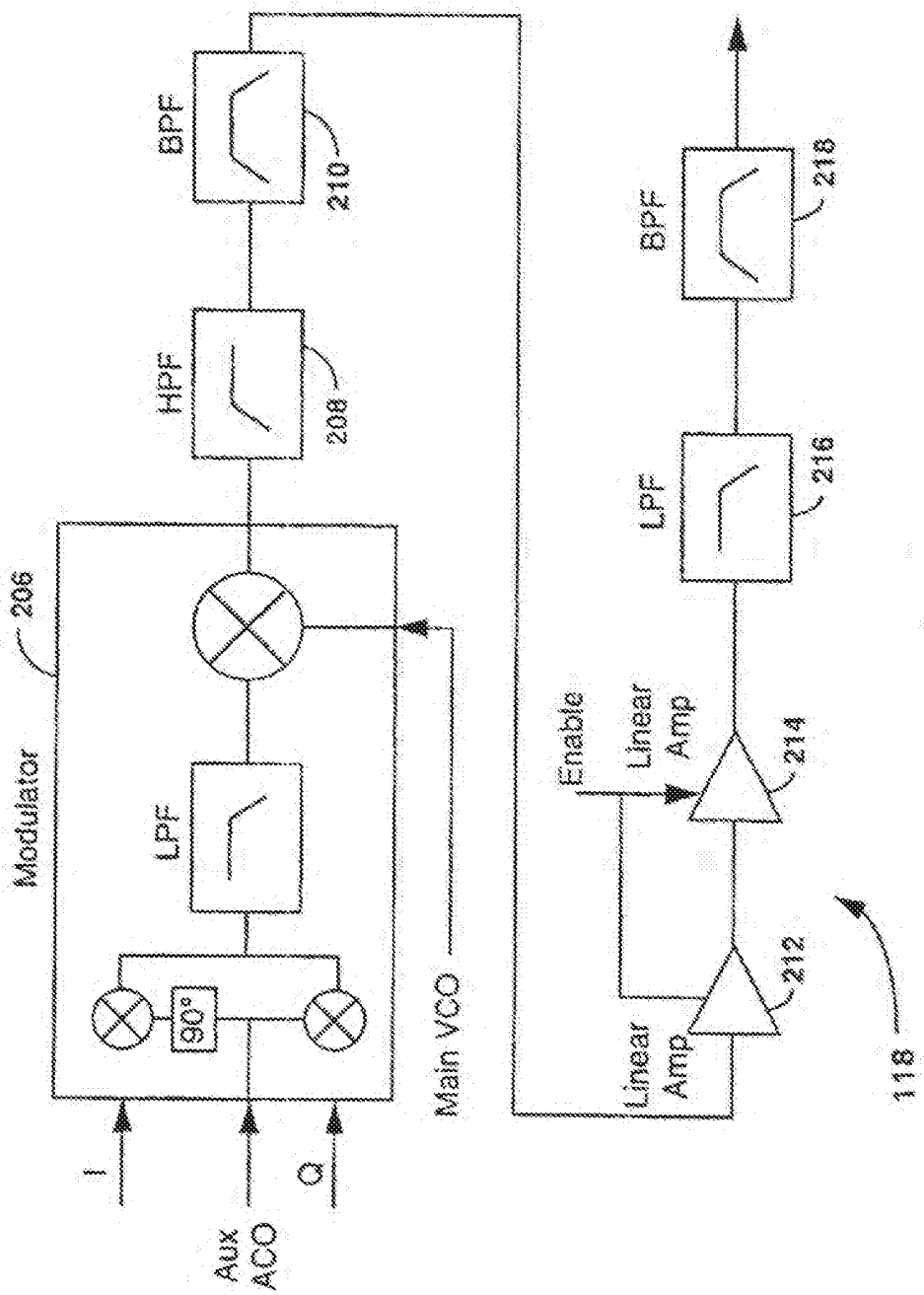
Modulator
206
I
Aux
ACO
Q
90°
LPF
HPF
208
BPF
210
Main VCO
Enable
Linear
Amp
212
214
LPF
216
BPF
218
118

FIG. 16

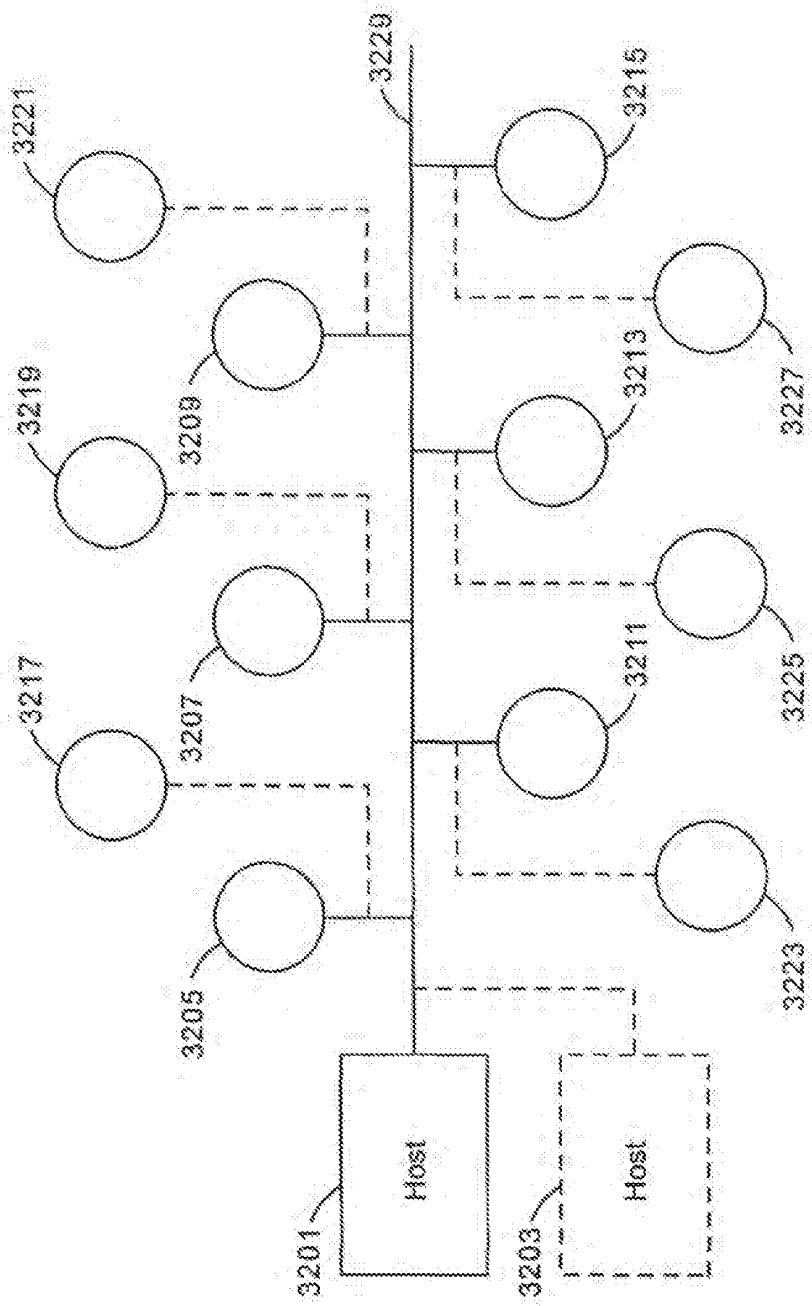
3229
3221
3215
3209
3227
3219
3213
3207
3225
3217
3211
3205
3223
Host
3201
Host
3203

Fig.21

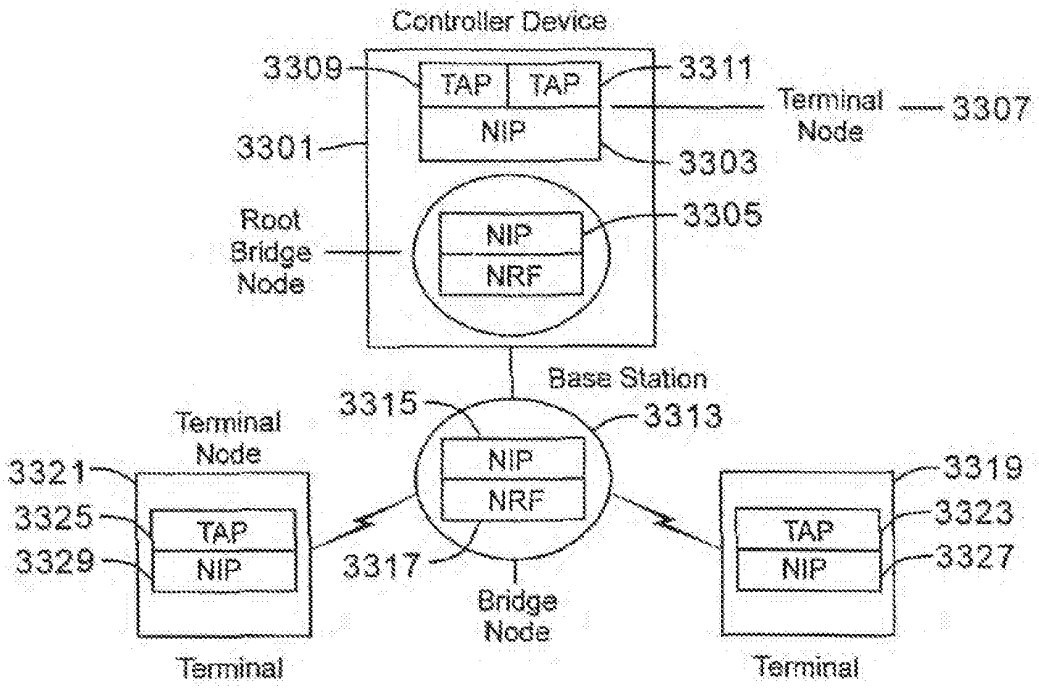
Controller Device
3309
TAP
TAP
3311
Terminal Node
3307
NIP
3301
3303
Root Bridge Node
NIP
NRF
3305
Base Station
3315
3313
Terminal Node
NIP
NRF
3321
3325
3329
TAP
NIP
3317
Bridge Node
3319
3323
3327
TAP
NIP
Terminal
Terminal

Fig. 22

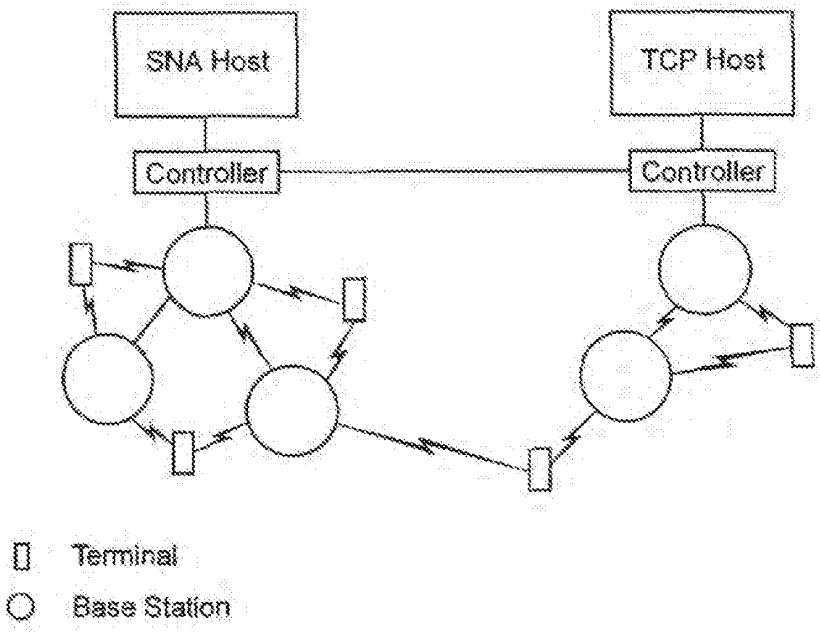
SNA Host
TCP Host
Controller
Controller
Terminal
Base Station

Fig. 23

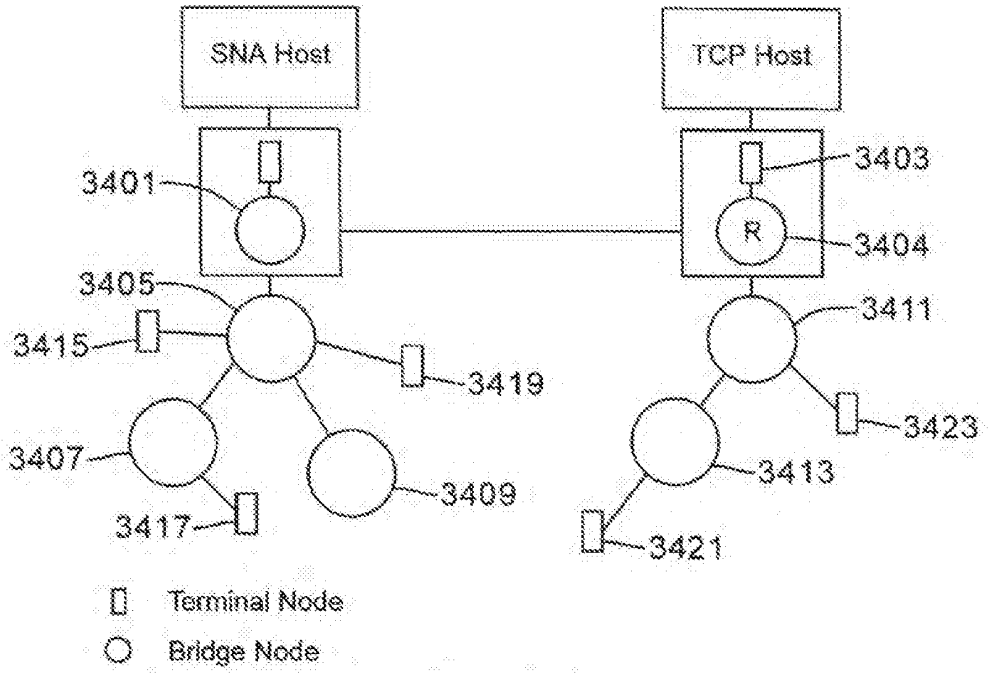
SNA Host
TCP Host
3401
3403
R
3404
3405
3411
3415
3419
3423
3407
3413
3409
3417
3421
Terminal Node
Bridge Node

Fig. 24

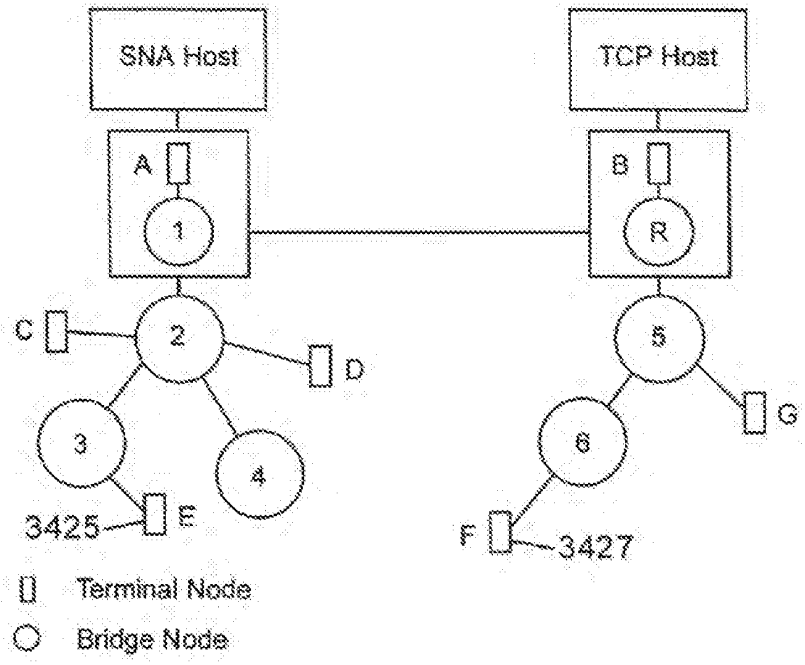
SNA Host
TCP Host
A
1
B
R
C
2
D
5
G
3
4
6
3425
E
F
3427
Terminal Node
Bridge Node

Fig. 25

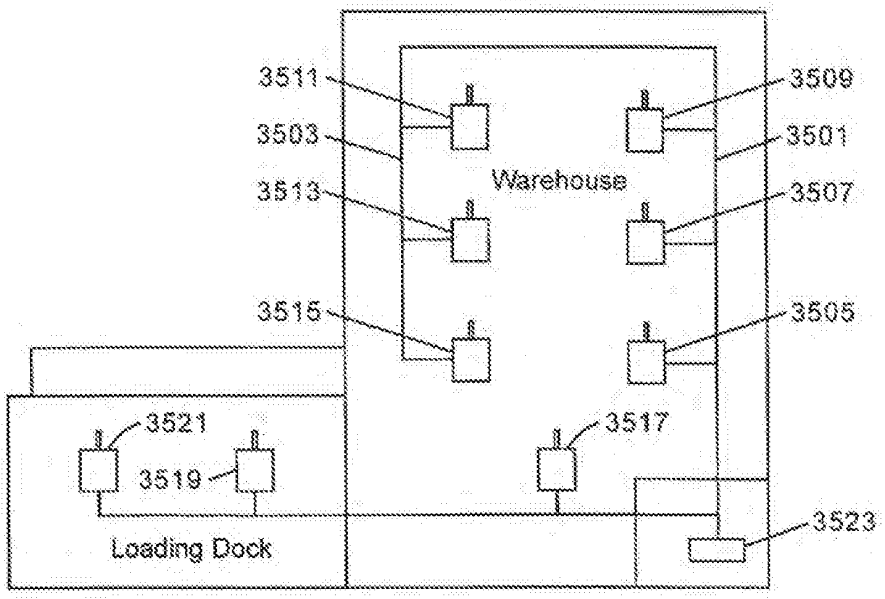
3511
3509
3503
3501
Warehouse
3513
3507
3515
3505
3521
3517
3519
3523
Loading Dock

Fig. 26

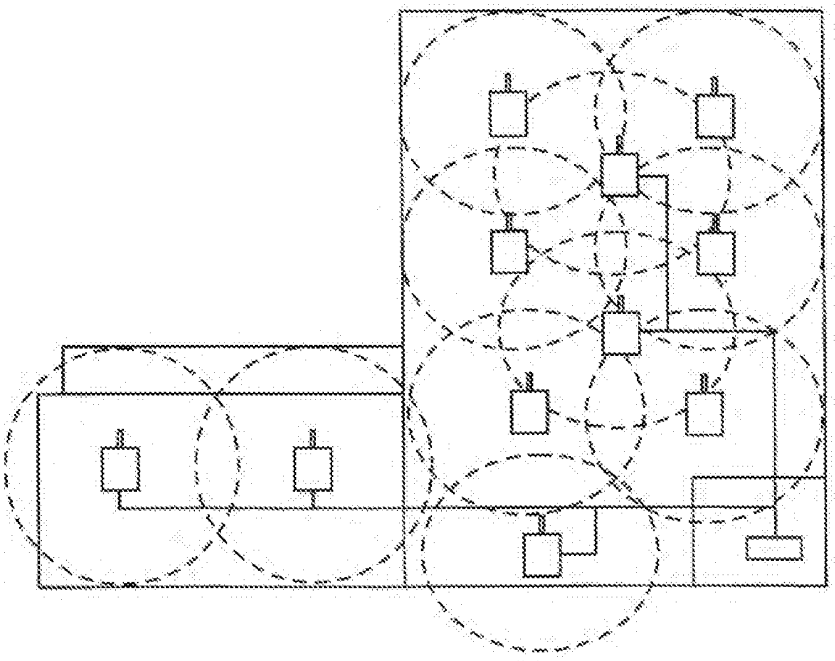

Fig. 27

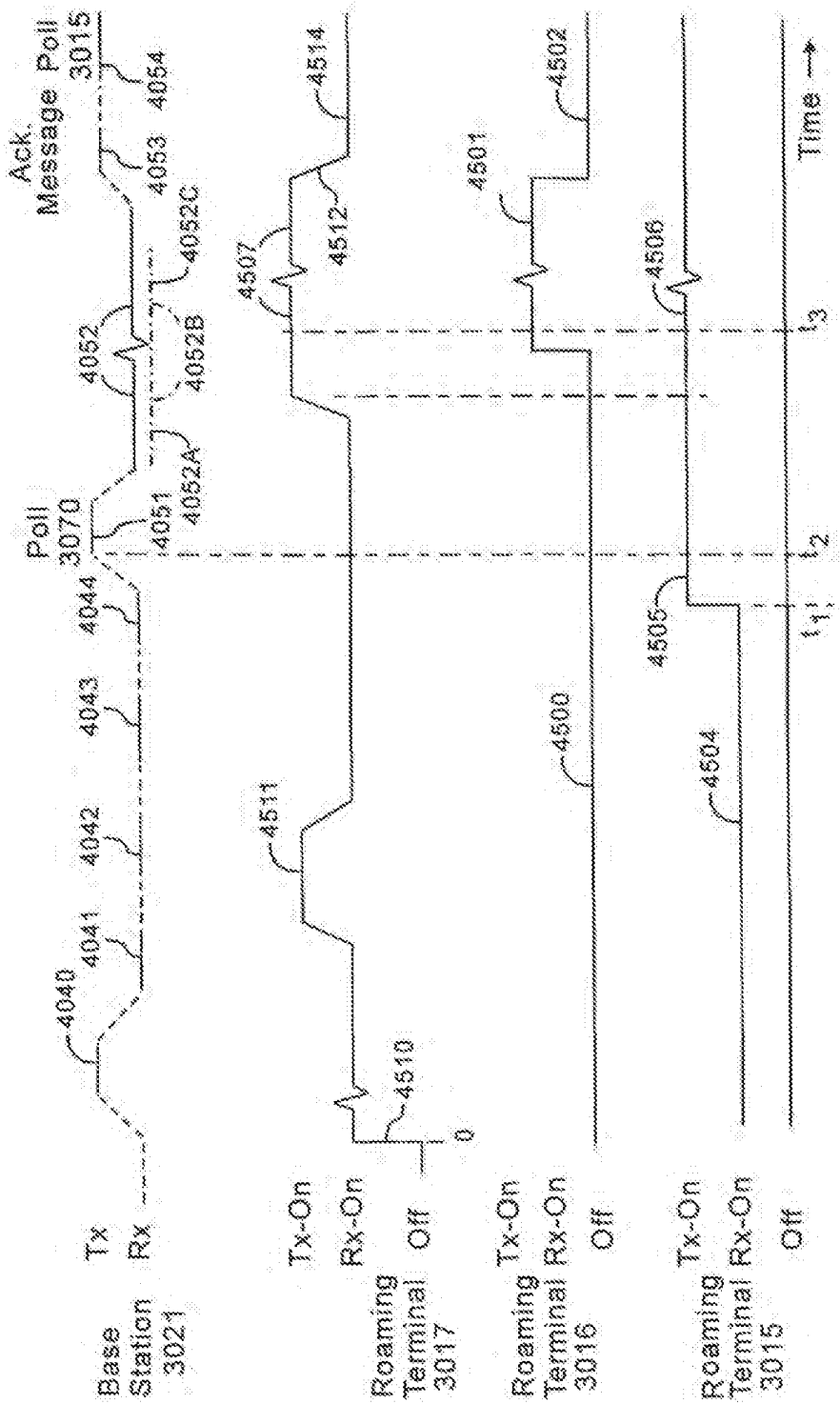
Base Station 3021
Tx
Rx
Roaming Terminal 3017
Tx-On
Rx-On
Off
Roaming Terminal 3016
Tx-On
Rx-On
Off
Roaming Terminal 3015
Tx-On
Rx-On
Off
4040
4041
4042
4043
4044
Poll 3070
4051
4052A
4052
4052B
4052C
4053
Ack. Message
Poll 3015
4054
4510
0
4511
4507
4512
4514
4500
4501
4502
4504
4505
4506
t_1
t_2
t_3
Time

Fig.28

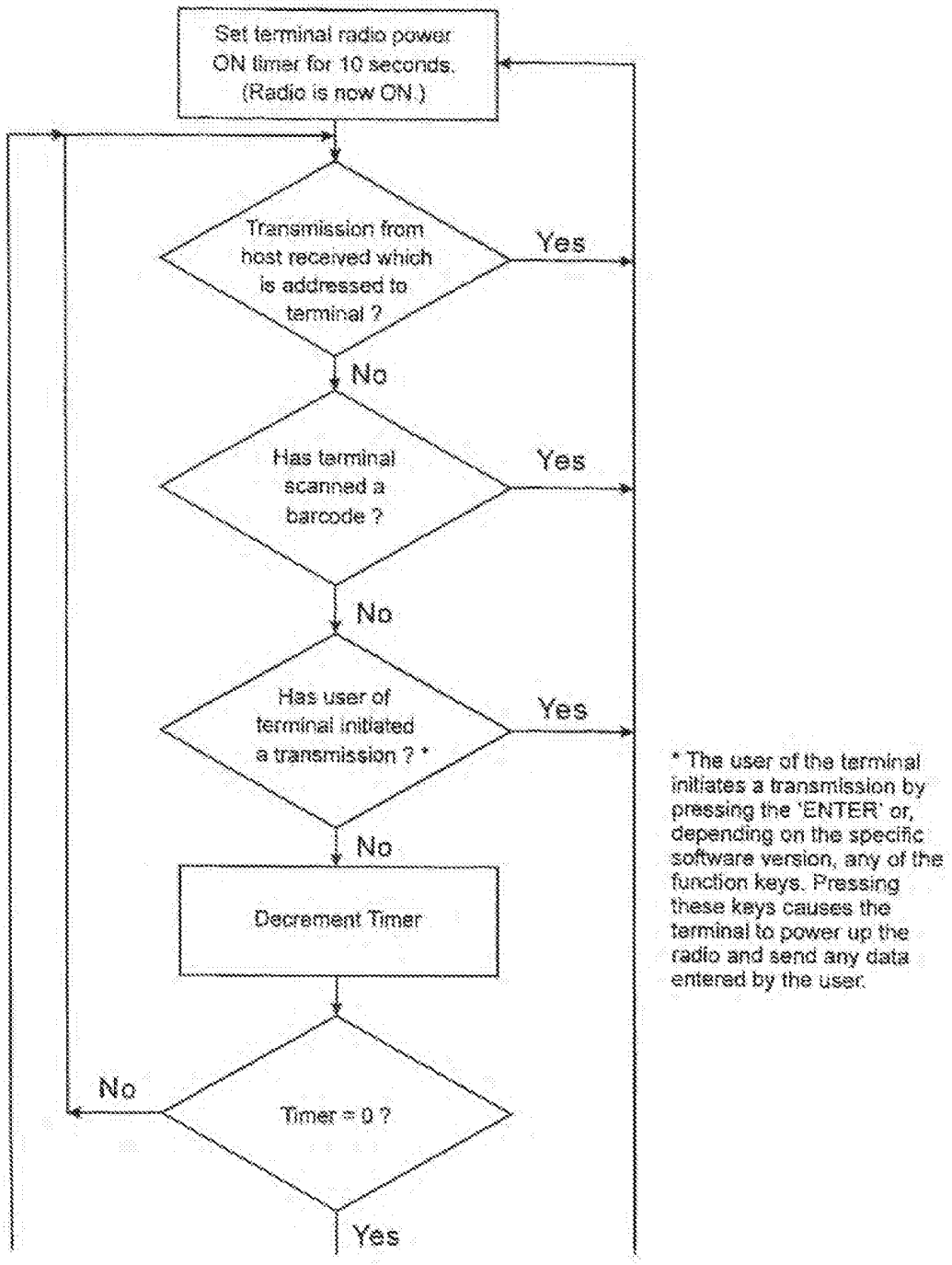
Set terminal radio power ON timer for 10 seconds. (Radio is now ON.)
Transmission from host received which is addressed to terminal ?
Yes
No
Has terminal scanned a barcode ?
Yes
No
Has user of terminal initiated a transmission ? *
Yes
No
Decrement Timer
Timer = 0 ?
No
Yes
* The user of the terminal initiates a transmission by pressing the 'ENTER' or, depending on the specific software version, any of the function keys. Pressing these keys causes the terminal to power up the radio and send any data entered by the user.

Fig.29

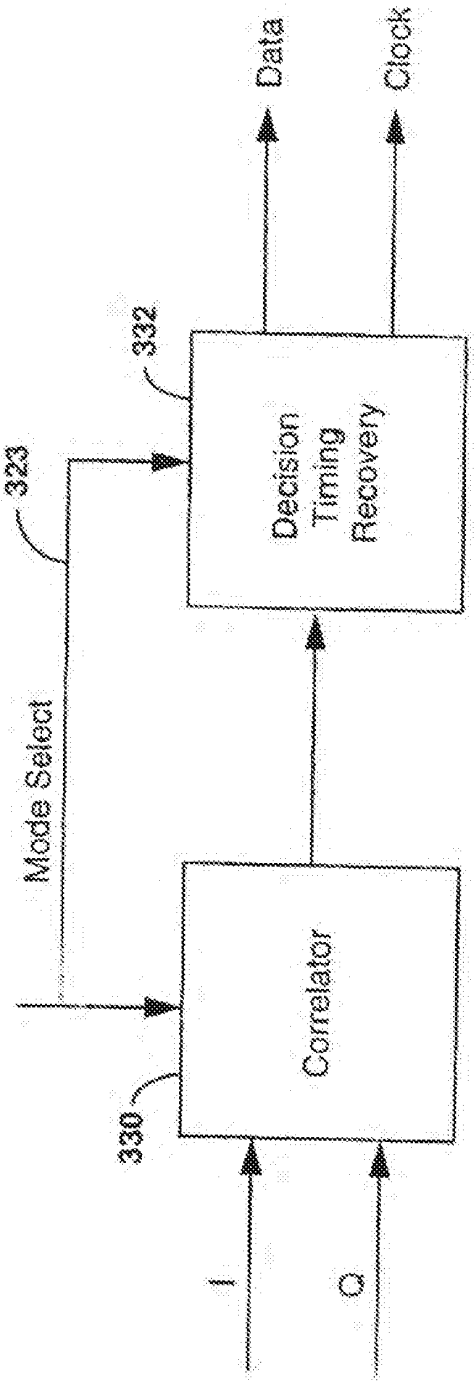
Data
Clock
332
Decision Timing Recovery
323
Mode Select
Correlator
330
I
Q

FIG. 17

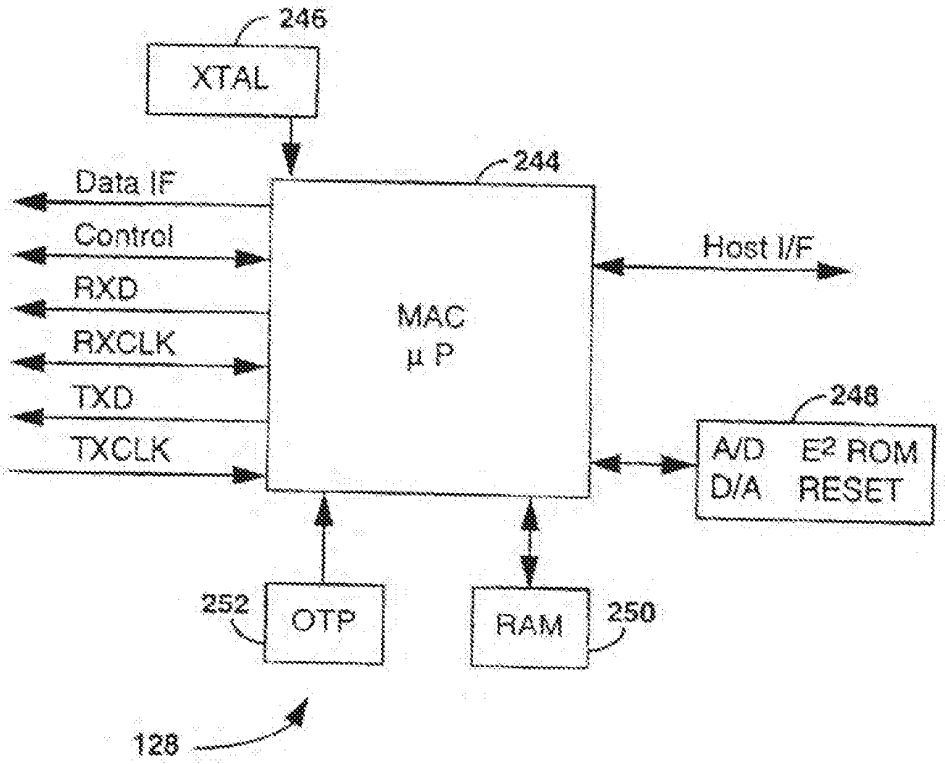
246
XTAL
244
Data IF
Control
RXD
RXCLK
TXD
TXCLK
MAC
μ P
Host I/F
248
A/D
D/A
E2 ROM
RESET
252
OTP
RAM
250
128

FIG. 18

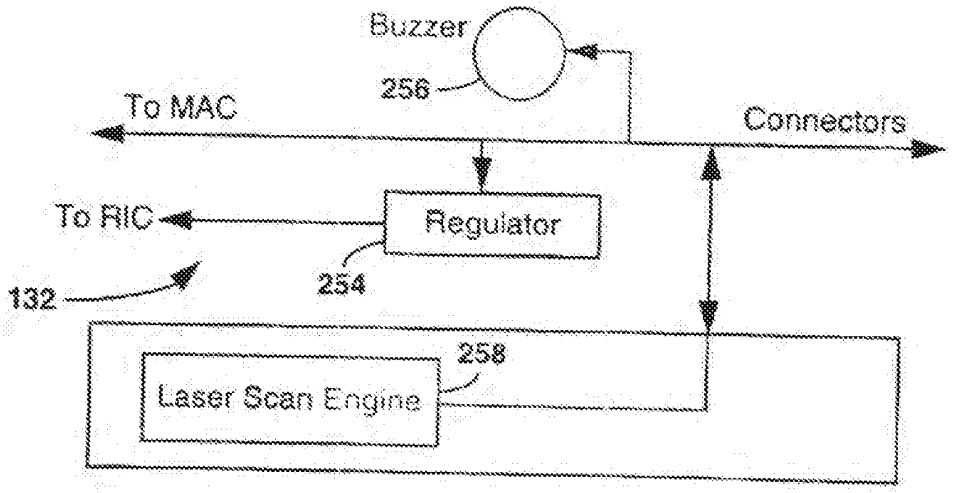
Buzzer
256
To MAC
Connectors
To RIC
Regulator
254
132
258
Laser Scan Engine

FIG. 19

US006697415B1

(12) **United States Patent**
Mahany

(10) **Patent No.: US 6,697,415 B1**
(45) **Date of Patent: Feb. 24, 2004**

(54) **SPREAD SPECTRUM TRANSCEIVER MODULE UTILIZING MULTIPLE MODE TRANSMISSION**

(75) Inventor: **Ronald L. Mahany**, Cedar Rapids, IA (US)

(73) Assignee: **Broadcom Corporation**, Irvine, CA (US)

(*) Notice: Subject to any disclaimer, the term of this patent is extended or adjusted under 35 U.S.C. 154(b) by 0 days.

(21) Appl. No.: **08/973,195**

(22) PCT Filed: **Jun. 3, 1996**

(86) PCT No.: **PCT/US96/09474**

§ 371 (c)(1),
(2), (4) Date: **Mar. 6, 2000**

(87) PCT Pub. No.: **WO96/38925**

PCT Pub. Date: **Dec. 5, 1996**

(51) **Int. Cl.**[7] **H04B 1/44**; H04B 1/69
(52) **U.S. Cl.** **375/130**; 375/219; 455/88
(58) **Field of Search** 375/130, 144, 375/146, 219, 222, 259, 377; 455/434, 73, 88

(56) **References Cited**

U.S. PATENT DOCUMENTS

3,665,164	A	5/1972	Beveridge	235/460
D229,234	S	11/1973	Kajita	D14/100
D230,859	S	3/1974	Kurosu	D26/56
3,826,900	A	7/1974	Moellering	250/568
3,947,817	A	3/1976	Requa	235/472

(List continued on next page.)

FOREIGN PATENT DOCUMENTS

EP	0194115	9/1986
EP	0262943	4/1988
FR	2389938	1/1979
GB	2,201,125 A	2/1987
JP	1572962	8/1980
JP	58-176792	10/1983
JP	58-211261	12/1983
JP	2-144681	6/1990
WO	8700659	1/1987
WO	8707106	11/1987

OTHER PUBLICATIONS

"PCMCIA Primer" by John Reimer, pp. 66–67, date unknown.
PCMCIA (IC) Cards, vol. 13, No. 8.

(List continued on next page.)

Primary Examiner—Young T. Tse
(74) *Attorney, Agent, or Firm*—McAndrews, Held & Malloy, Ltd.

(57) **ABSTRACT**

A data transceiver module for digital data communications in a portable hand-held data terminal has multiple data spread spectrum modes which include direct sequence and frequency function modulation algorithms. The transceiver module has multiple user or program configurable data rates, modulation, channelization and process gain in order to maximize the performance of radio data transmissions and to maximize interference immunity. Various module housings, which may be PCMCIA type, are able to be mated with a suitably designed data terminal. Media access control protocols and interfaces of multiple nominal operational frequencies are utilized. Wireless access devices in a cell based network each consider a variety of factors when choosing one of a plurality of modes of wireless operation and associated operating parameters. Such selection defines a communication channel to support wireless data, message and communication exchanges. In further embodiments, the wireless access devices also support a second channel, a busy/control channel, for managing communication on the main communication channel and to overcome roaming and hidden terminal problems. Roaming terminal devices are also configured to support the dual channel design. Such configuration in both circumstances may involve the use of a multimode radio that is timeshared between the two channels or two radios, one dedicated to each channel.

18 Claims, 36 Drawing Sheets

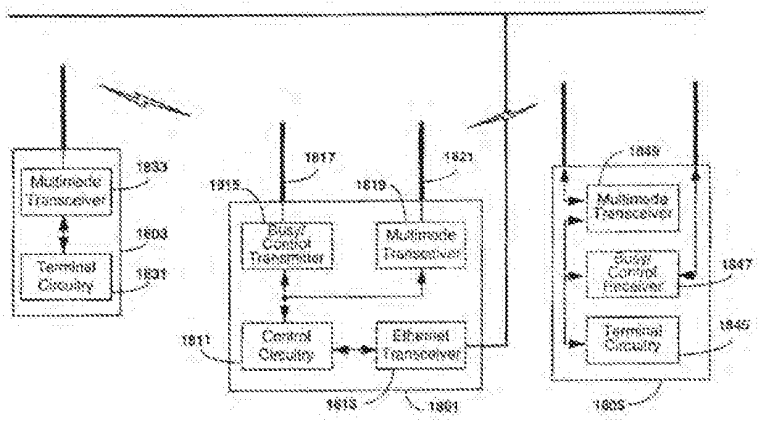

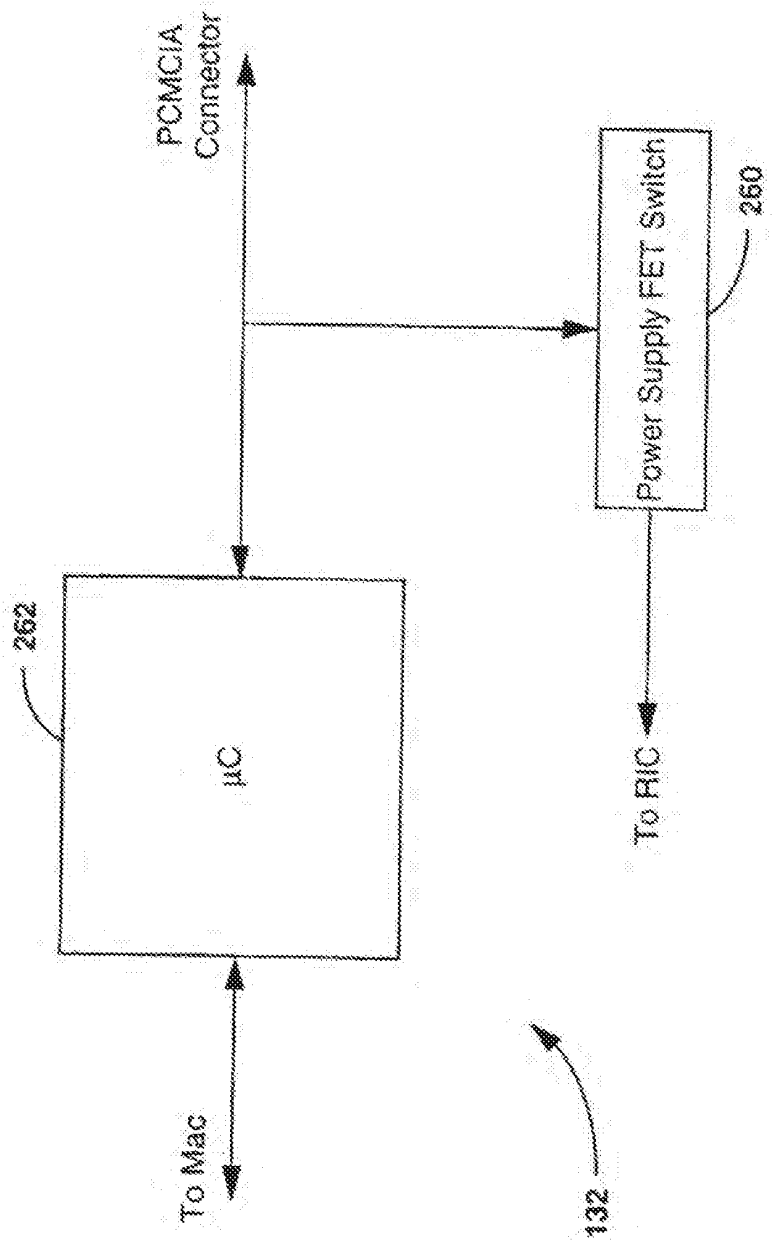
PCMCIA Connector
Power Supply FET Switch
260
262
µC
To RIC
To Mac
132

FIG. 20

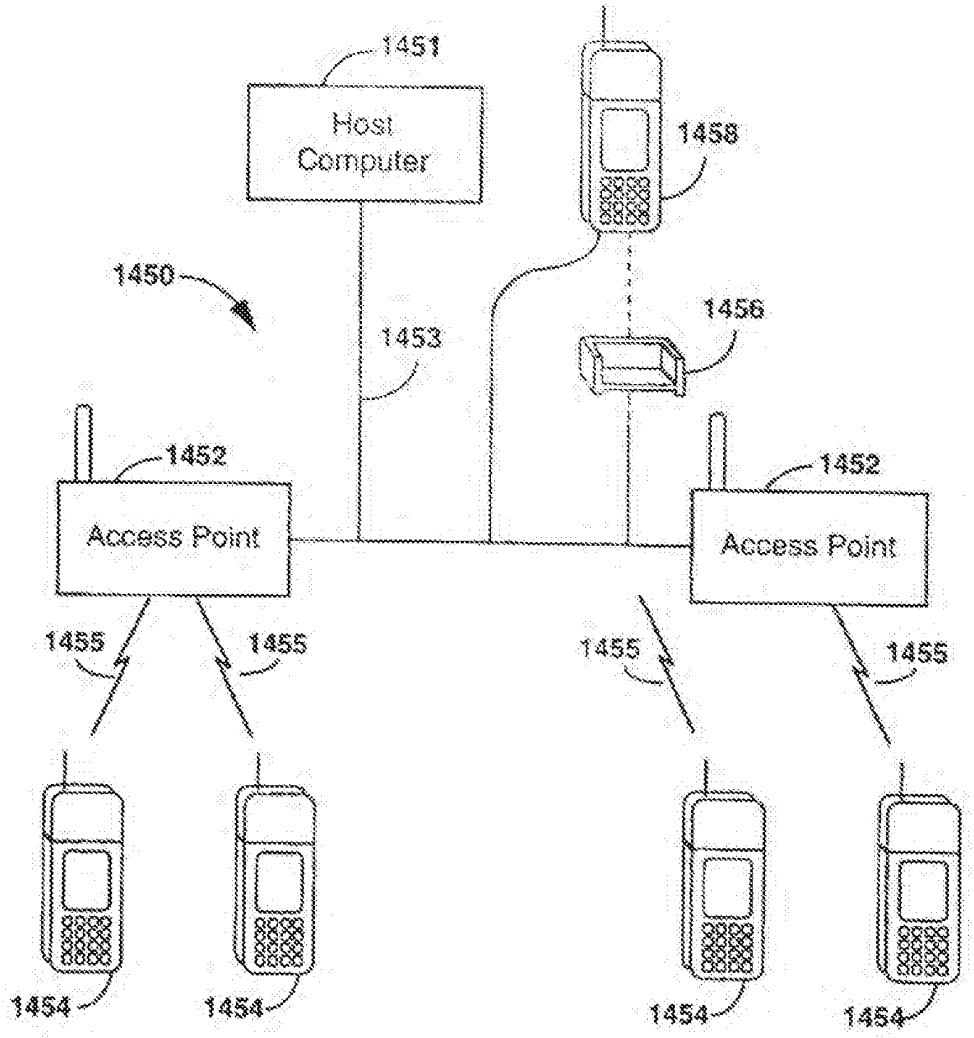
1451
Host Computer
1458
1450
1453
1456
1452
Access Point
1452
Access Point
1455
1455
1455
1455
1454
1454
1454
1454

FIG. 21

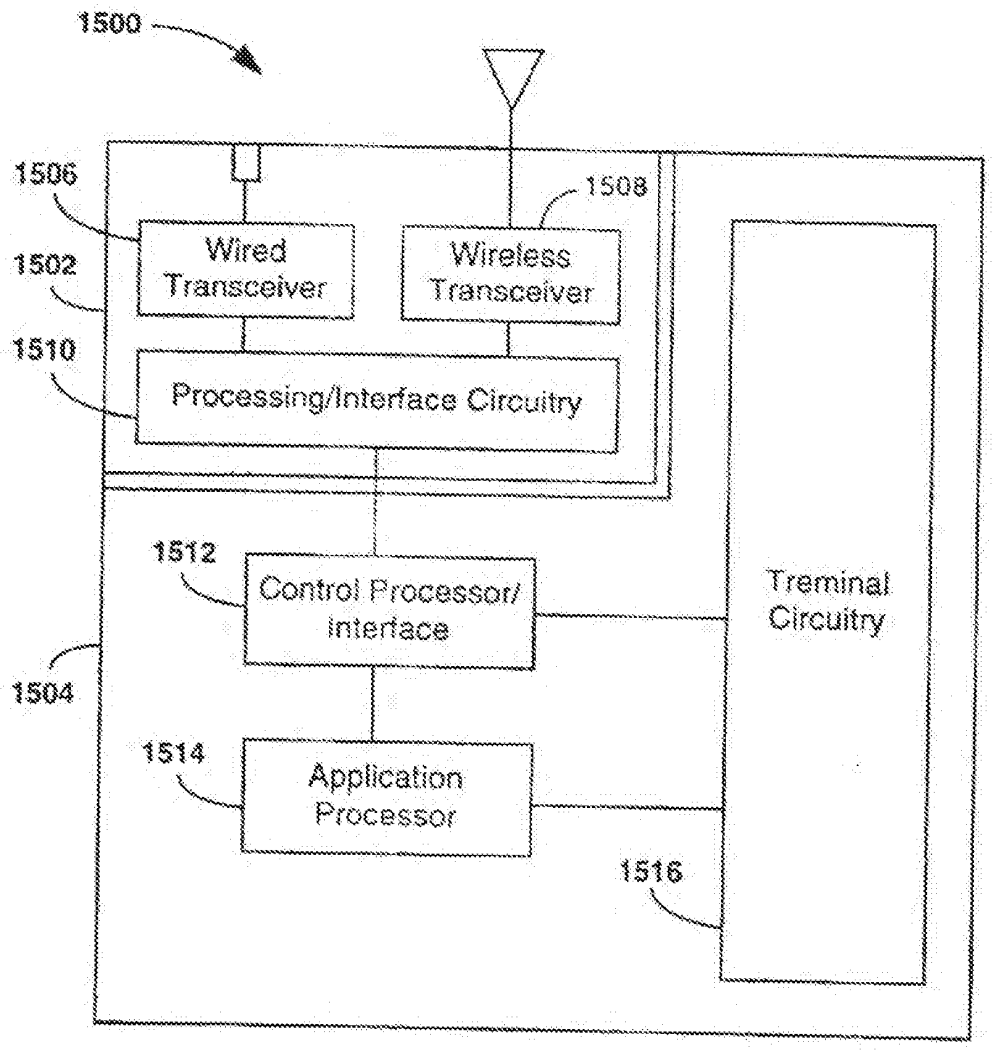
1500
1506
1508
1502
Wired Transceiver
Wireless Transceiver
1510
Processing/Interface Circuitry
1512
Control Processor/ interface
Treminal Circuitry
1504
1514
Application Processor
1516

FIG. 22A

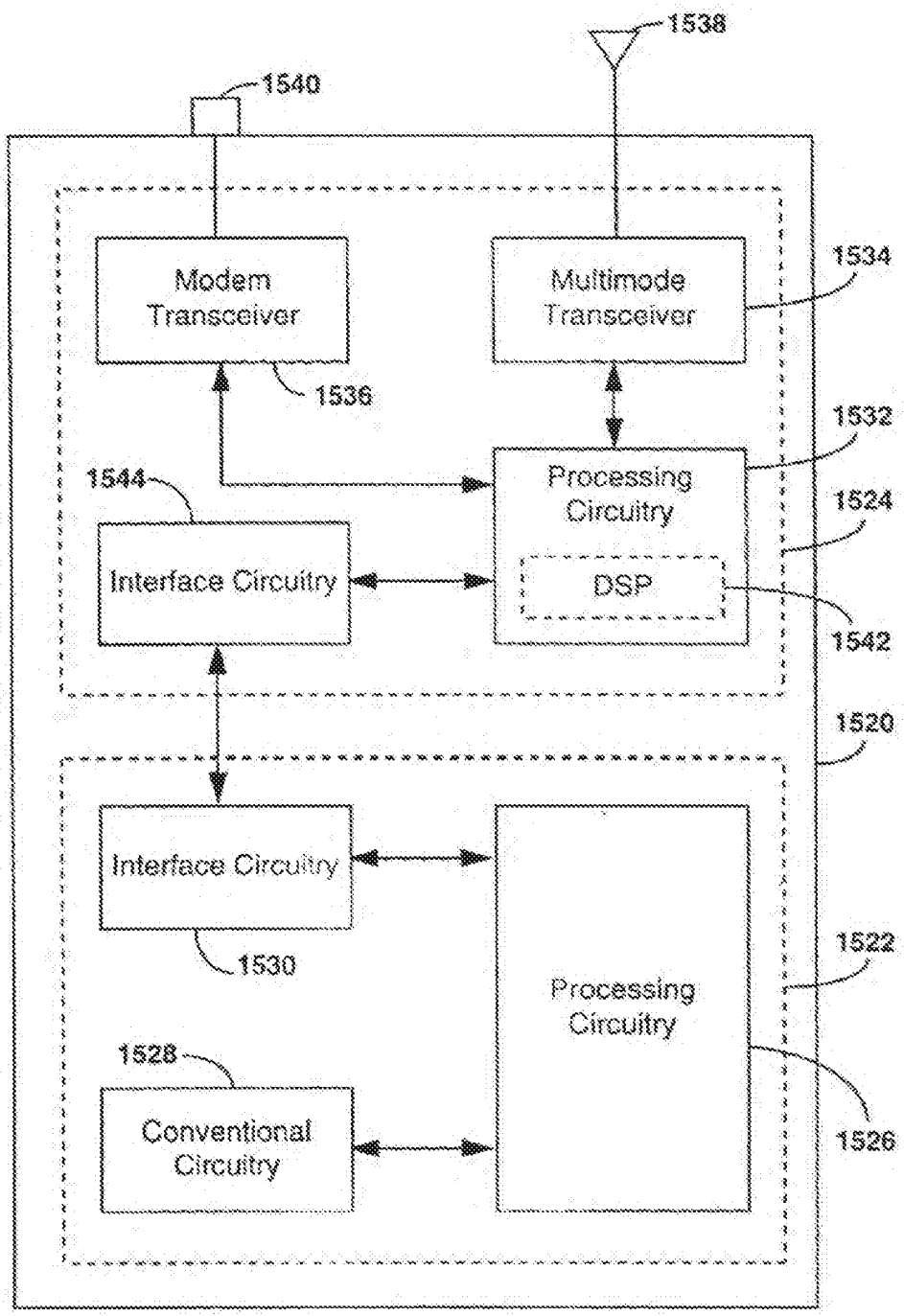
1538
1540
Modem Transceiver
Multimode Transceiver
1534
1536
1532
1544
Processing Circuitry
1524
Interface Circuitry
DSP
1542
1520
Interface Circuitry
1530
1522
Processing Circuitry
1528
Conventional Circuitry
1526

FIG. 22B

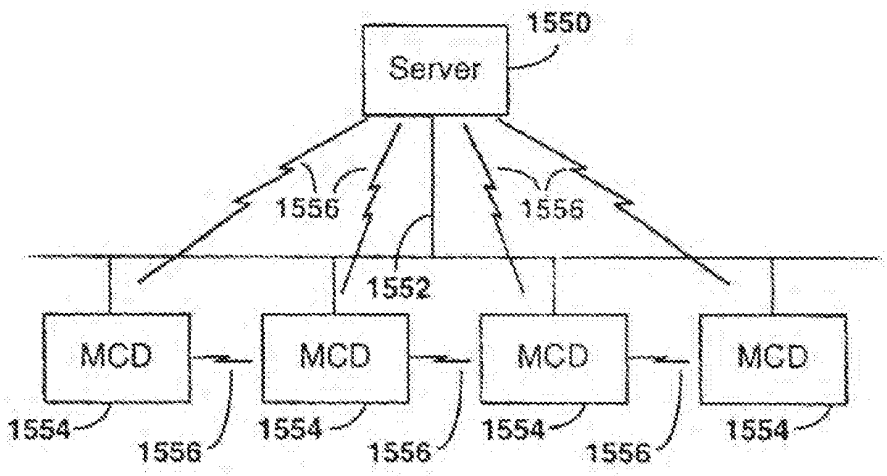
Server
1550
1556
1556
1552
MCD
MCD
MCD
MCD
1554
1556
1554
1556
1554
1556
1554

FIG. 23

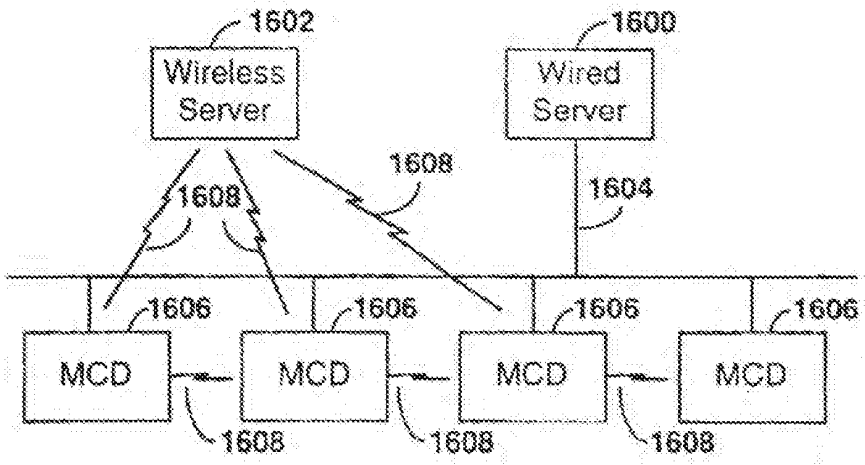
1602
Wireless Server
1600
Wired Server
1608
1608
1604
1606
1606
1606
1606
MCD
MCD
MCD
MCD
1608
1608
1608

FIG. 24

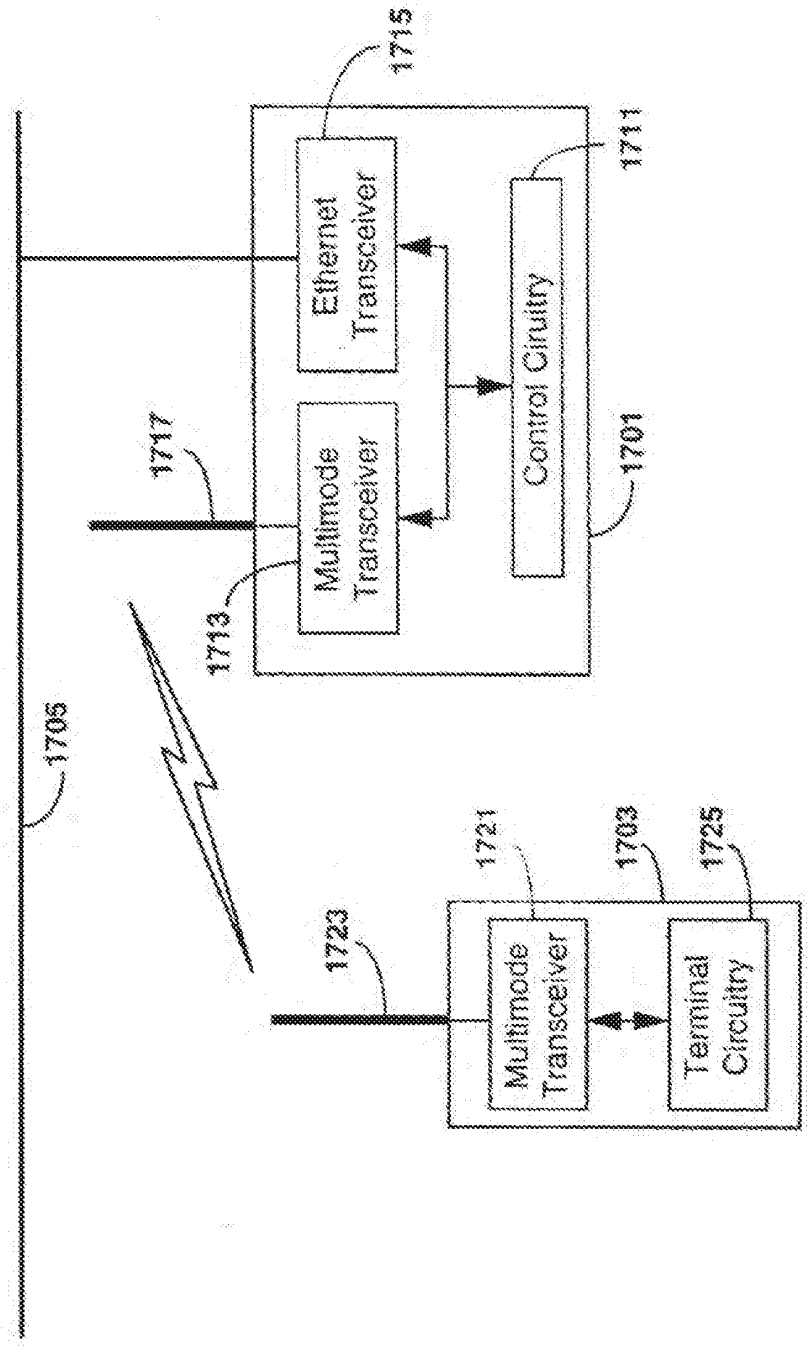
1705
1715
Ethernet Transceiver
1711
Control Circuitry
1717
Multimode Transceiver
1701
1713
1721
1703
1725
1723
Multimode Transceiver
Terminal Circuitry

FIG. 25a

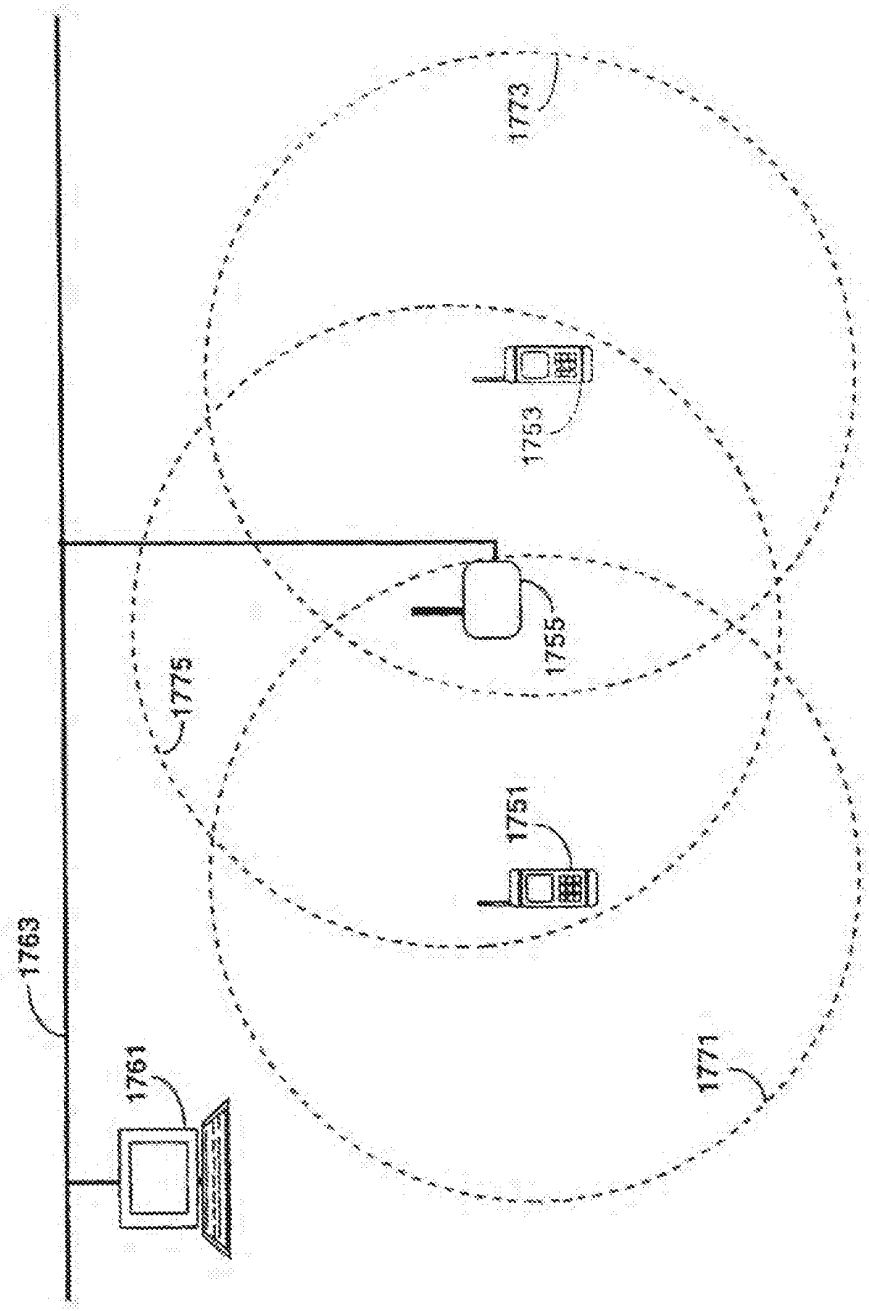

FIG. 25b

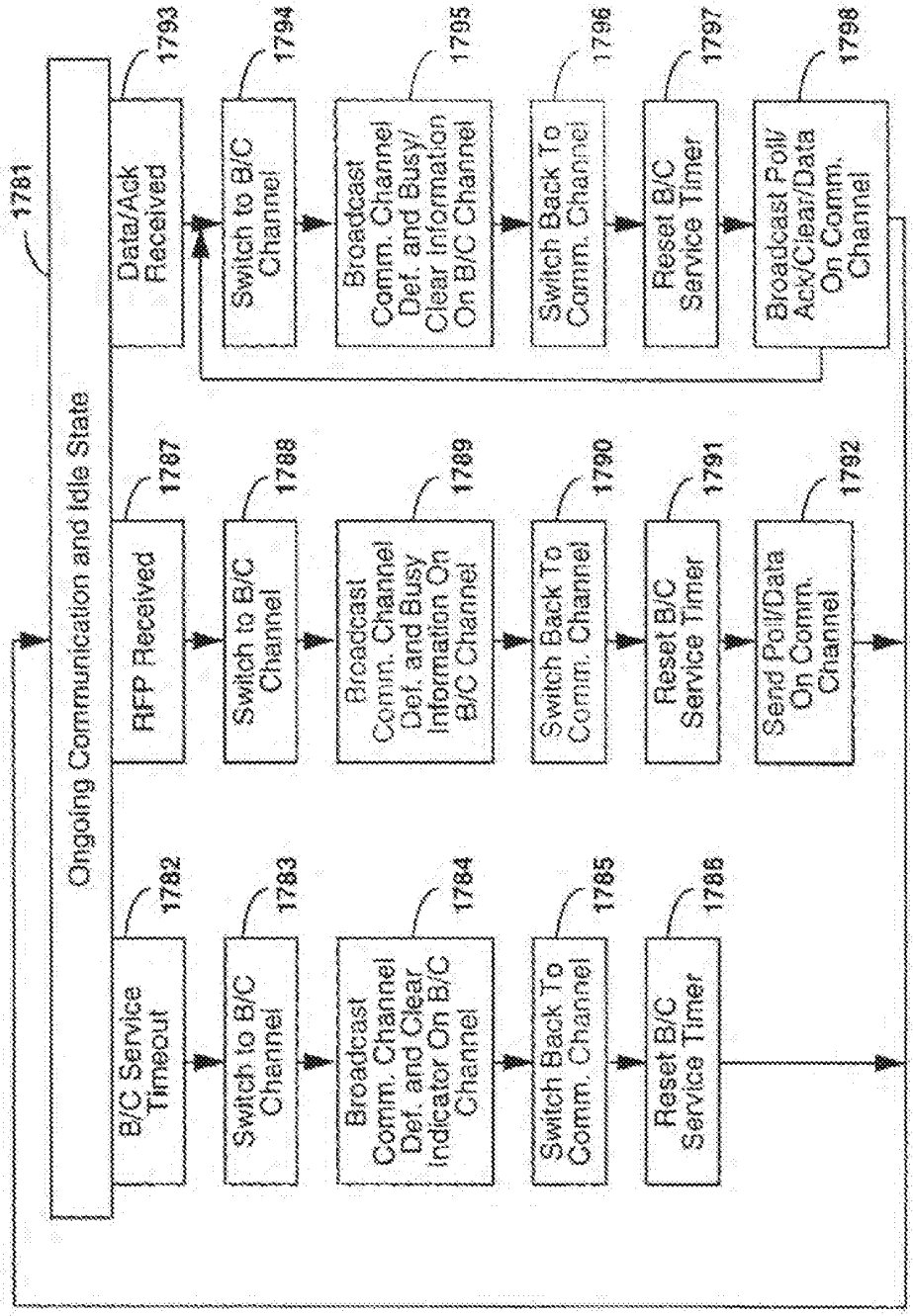
1781
Ongoing Communication and Idle State
B/C Service Timeout
1782
Switch to B/C Channel
1783
Broadcast Comm. Channel Def. and Clear Indicator On B/C Channel
1784
Switch Back To Comm. Channel
1785
Reset B/C Service Timer
1786
RFP Received
1787
Switch to B/C Channel
1788
Broadcast Comm. Channel Def. and Busy Information On B/C Channel
1789
Switch Back To Comm. Channel
1790
Reset B/C Service Timer
1791
Send Poll/Data On Comm. Channel
1792
Data/Ack Received
1793
Switch to B/C Channel
1794
Broadcast Comm. Channel Def. and Busy/ Clear Information On B/C Channel
1795
Switch Back To Comm. Channel
1796
Reset B/C Service Timer
1797
Broadcast Poll/ Ack/Clear/Data On Comm. Channel
1798

FIG. 25c

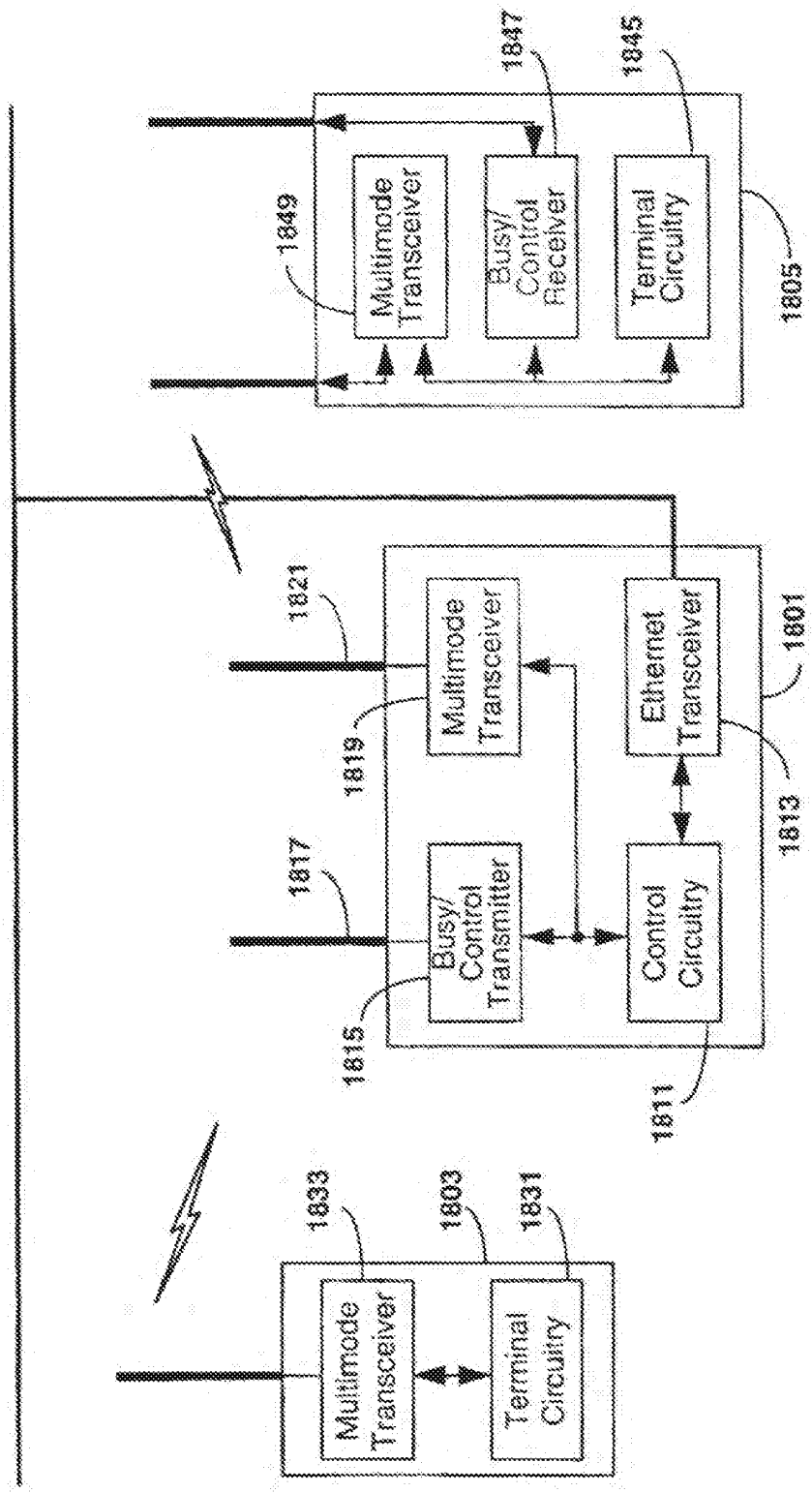
Multimode Transceiver
Busy/ Control Receiver
Terminal Circuitry
1849
1847
1845
1805
1821
1819
1817
1815
Multimode Transceiver
Busy/ Control Transmitter
Ethernet Transceiver
Control Circuitry
1801
1813
1811
1833
1803
1831
Multimode Transceiver
Terminal Circuitry

FIG. 26a

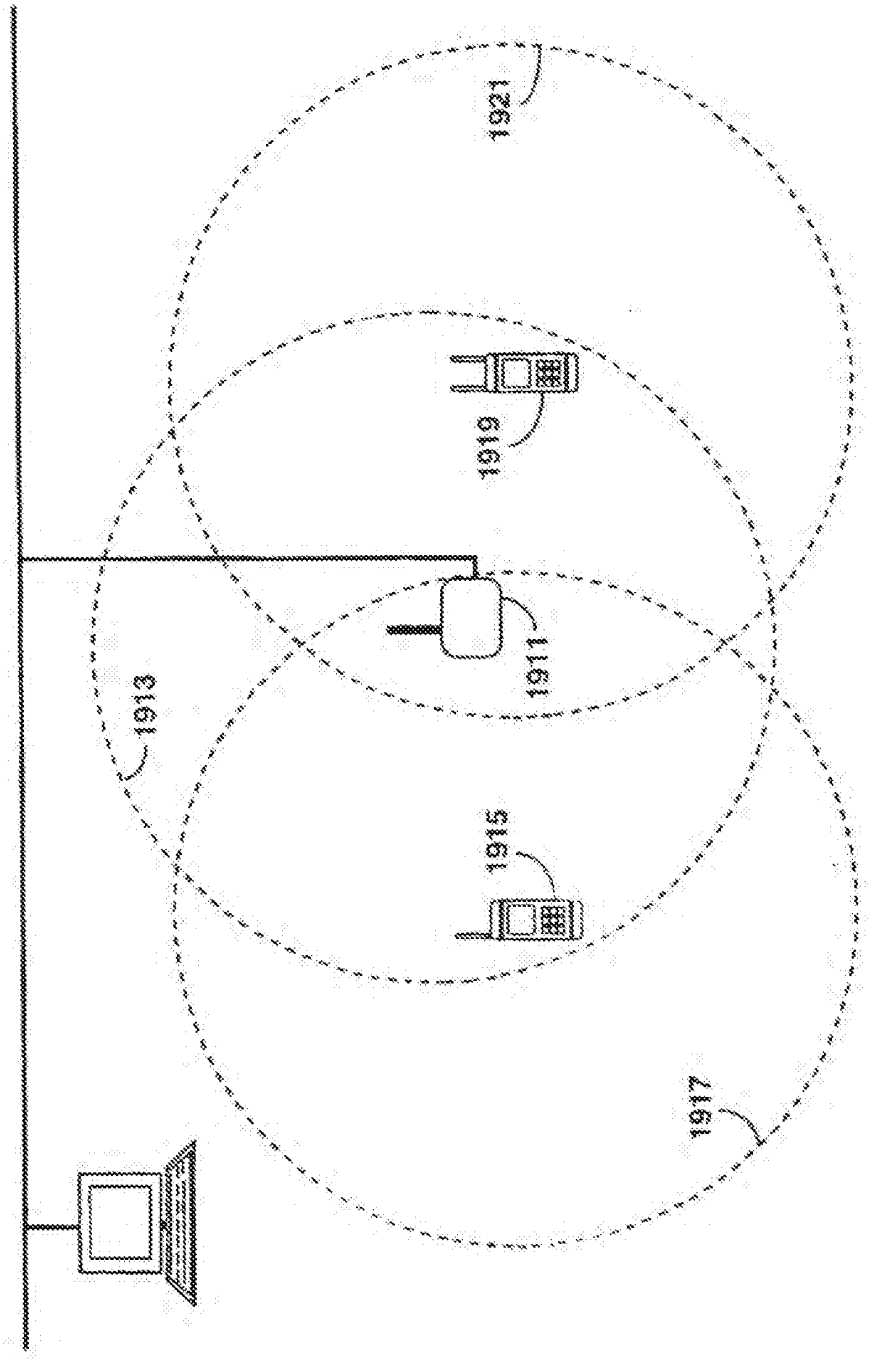

FIG. 26b

U.S. PATENT DOCUMENTS

3,976,973	A	8/1976	Martin et al.	235/472
4,002,892	A	1/1977	Zielinski	307/150
4,005,400	A	1/1977	Engdahl	340/365 R
4,017,725	A	4/1977	Roen	235/152
4,020,527	A	5/1977	O'Neill	16/110
4,058,838	A	11/1977	Crager et al.	358/257
4,091,270	A	5/1978	Musch et al.	235/419
4,115,870	A	9/1978	Lowell	364/900
4,133,034	A	1/1979	Eiter	364/464
4,136,821	A	1/1979	Sugiura et al.	235/462
4,141,492	A	2/1979	Michel et al.	235/437
4,158,130	A	6/1979	Speraw et al.	235/146
4,158,194	A	6/1979	McWaters et al.	235/454
4,165,554	A	8/1979	Faget	D18/7
4,188,103	A	2/1980	Biber et al.	354/27
4,210,802	A	7/1980	Sakai	235/483
4,247,908	A	1/1981	Lockhart, Jr. et al.	364/900
4,277,837	A	7/1981	Stuckert	364/900
4,282,425	A	8/1981	Chadima et al.	235/462
4,322,612	A	3/1982	Lange	235/419
4,385,285	A	5/1983	Horst et al.	382/3
4,414,661	A	11/1983	Karlstrom	370/95
4,415,065	A	11/1983	Sandstedt	186/39
4,418,277	A	11/1983	Tremmel et al.	235/472
4,422,745	A	12/1983	Hopson	354/105
4,423,319	A	12/1983	Jacobson	235/419
4,460,120	A	7/1984	Shepard et al.	235/472
4,488,679	A	12/1984	Bockholt et al.	235/469
4,500,776	A	2/1985	Laser	235/162
4,506,344	A	3/1985	Hubbard	364/900
4,511,970	A	4/1985	Okano et al.	364/401
4,519,068	A	5/1985	Krebs et al.	
4,523,087	A	6/1985	Benton	235/379
4,523,297	A	6/1985	Ugon et al.	235/380
4,569,421	A	2/1986	Sandstedt	235/383
4,570,057	A	2/1986	Chadima, Jr. et al.	364/708
4,578,571	A	3/1986	Williams	235/472
4,603,262	A	7/1986	Eastman et al.	250/566
4,621,189	A	11/1986	Kumar et al.	235/472
4,627,736	A	12/1986	Komaki	368/88
4,628,193	A	12/1986	Blum	235/375
4,634,845	A	1/1987	Hale et al.	235/350
4,641,292	A	2/1987	Tunnell et al.	381/42
4,654,818	A	3/1987	Wenersa, Jr.	364/900
4,661,993	A	4/1987	Leland et al.	455/103
4,689,761	A	8/1987	Yurchenco	364/708
4,703,161	A	10/1987	McLean	235/1
4,706,096	A	11/1987	Saito	235/488
4,718,103	A	1/1988	Shajima et al.	382/13
4,718,110	A	1/1988	Schaefer	455/90
4,727,245	A	2/1988	Dobbins et al.	235/472
4,734,566	A	3/1988	Scada et al.	235/495
D295,411	S	4/1988	Cho et al.	D14/100
4,743,773	A	5/1988	Katanta et al.	250/566
4,749,353	A	6/1988	Breedlove	381/43
4,752,965	A	6/1988	Dunkley	235/379
4,758,717	A	7/1988	Shepard et al.	235/472
4,760,248	A	7/1988	Swartz et al.	235/472
4,761,822	A	8/1988	Maile	455/82
4,766,300	A	8/1988	Chadima, Jr. et al.	235/472
4,768,230	A	8/1988	Viehrantz et al.	455/603
4,773,032	A	9/1988	Uehara	364/900
4,793,812	A	12/1988	Sussman et al.	235/472
4,825,057	A	4/1989	Swartz	235/472
4,831,275	A	5/1989	Uracker	235/472
4,835,372	A	5/1989	Gombrich	235/375
4,836,256	A	6/1989	Melicosi	206/523
4,837,858	A	6/1989	Ahlay et al.	455/34
4,842,966	A	6/1989	Omori et al.	307/150
4,845,350	A	7/1989	Shepard et al.	235/472
4,850,009	A	7/1989	Zook et al.	235/375
D303,112	S	8/1989	Desrochers	D14/100
4,857,716	A	8/1989	Gombrich et al.	235/462
4,866,646	A	9/1989	Nakamura et al.	364/709.11
4,877,949	A	10/1989	Danielson et al.	235/462
4,881,839	A	11/1989	Grimm	400/692
4,890,832	A	1/1990	Komaki	235/146
4,897,532	A	1/1990	Swartz et al.	235/472
4,910,775	A	3/1990	Yves et al.	235/379
4,916,441	A	4/1990	Gombrich	235/380 X
4,940,974	A	7/1990	Sojka	340/825.08
4,942,356	A	7/1990	Ellingen et al.	361/392
4,953,113	A	8/1990	Chadima, Jr. et al.	364/708
4,967,188	A	10/1990	Collins	340/636
4,972,496	A	11/1990	Sklarew	382/13
4,983,818	A	1/1991	Knowles	235/467
4,984,247	A	1/1991	Kaufmann et al.	
5,002,164	A	3/1991	Lloyd	206/305
5,008,879	A	4/1991	Fischer et al.	370/85.2
5,012,407	A	4/1991	Finn	364/200
5,023,824	A	6/1991	Chadima, Jr. et al.	235/462
5,029,181	A	7/1991	Endo et al.	
5,046,066	A	9/1991	Messenger	
5,046,130	A	9/1991	Hall et al.	455/456
5,049,862	A	9/1991	Dao et al.	340/706
5,049,863	A	9/1991	Oka	340/710
5,057,676	A	10/1991	Komaki	235/375
5,059,778	A	10/1991	Zouzoulas et al.	235/472
5,070,536	A	12/1991	Mahany et al.	455/67
5,097,484	A	3/1992	Akaiwa	
5,101,406	A	3/1992	Messenger et al.	
5,117,501	A	5/1992	Childress et al.	455/11.1
5,142,534	A	8/1992	Simpson et al.	
5,164,942	A	11/1992	Kamerman et al.	
5,181,200	A	1/1993	Harrison	
5,202,817	A	4/1993	Koenck et al.	361/393
5,216,233	A	6/1993	Main et al.	235/472
5,218,187	A	6/1993	Koenck et al.	235/375
5,227,614	A	7/1993	Danielson et al.	235/380
5,268,933	A	12/1993	Averbuch	
5,291,516	A	3/1994	Dixon et al.	
5,297,144	A	3/1994	Gilbert et al.	
5,321,542	A	6/1994	Freitas et al.	
5,363,401	A	11/1994	Lucas et al.	375/131
5,363,402	A	11/1994	Harmon et al.	
5,390,166	A	2/1995	Rohani et al.	
5,404,375	A	4/1995	Krueger et al.	
5,410,141	A	4/1995	Koenck et al.	235/472
5,410,740	A	4/1995	Hagstrom	
5,410,752	A	4/1995	Schofield	
5,465,392	A	11/1995	Baptist et al.	
5,469,468	A	* 11/1995	Schilling	375/130
5,513,184	A	4/1996	Vanucci	370/350
5,546,397	A	8/1996	Mahany	
5,551,060	A	8/1996	Fuji et al.	455/33.4
5,561,845	A	10/1996	Bendixen et al.	455/33.4
5,644,576	A	7/1997	Bauchot et al.	375/131
5,655,219	A	8/1997	Jusa et al.	455/338
5,734,645	A	3/1998	Raith et al.	455/466
5,748,621	A	* 5/1998	Masuda et al.	370/337
5,768,267	A	6/1998	Raith et al.	370/329
5,781,612	A	* 7/1998	Choi et al.	455/435
5,790,567	A	8/1998	Smith et al.	375/147
5,844,893	A	12/1998	Gollnicket et al.	370/329
5,926,501	A	* 7/1999	Souissi et al.	375/131
5,960,344	A	9/1999	Mahany	455/432
6,005,884	A	* 12/1999	Cook et al.	375/132
6,115,412	A	* 9/2000	Vandenpool	375/130
6,118,824	A	* 9/2000	Smith et al.	375/259
6,138,010	A	* 10/2000	Raba et al.	455/426
6,188,720	B1	* 2/2001	Batzer et al.	375/222

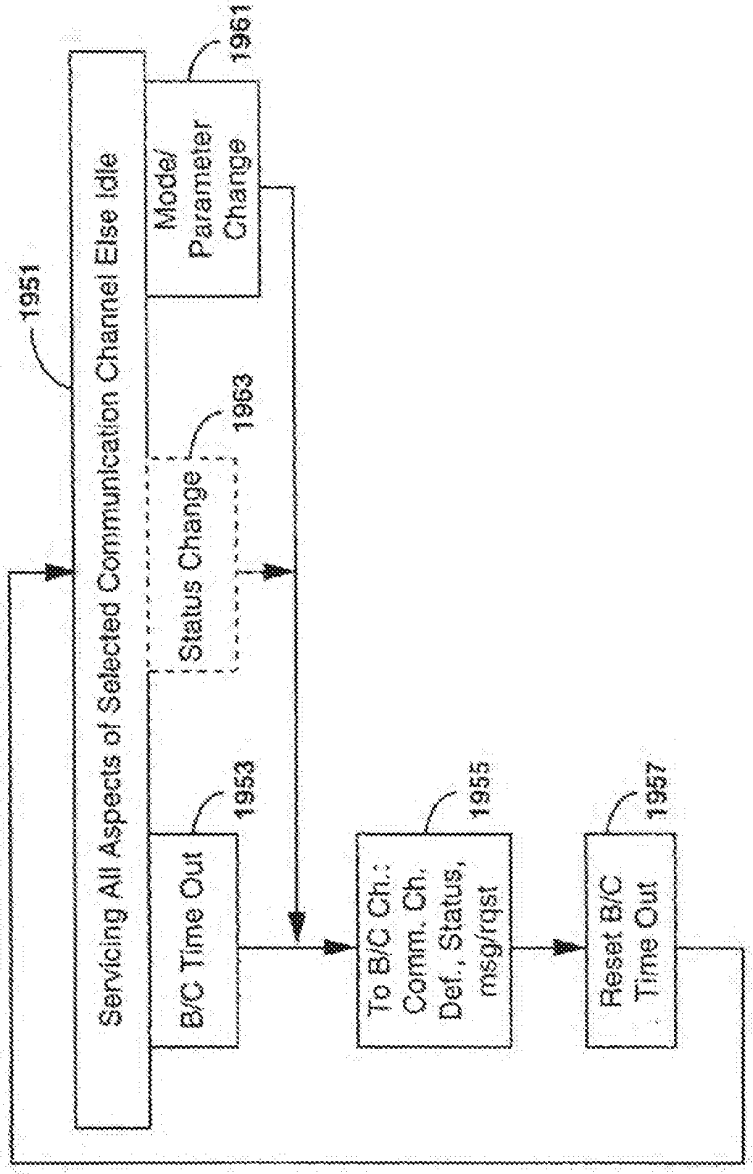
1951
Servicing All Aspects of Selected Communication Channel Else Idle
1953
B/C Time Out
1955
To B/C Ch.: Comm. Ch. Def., Status, msg/rqst
1957
Reset B/C Time Out
1961
Mode/ Parameter Change
1963
Status Change

FIG. 26c

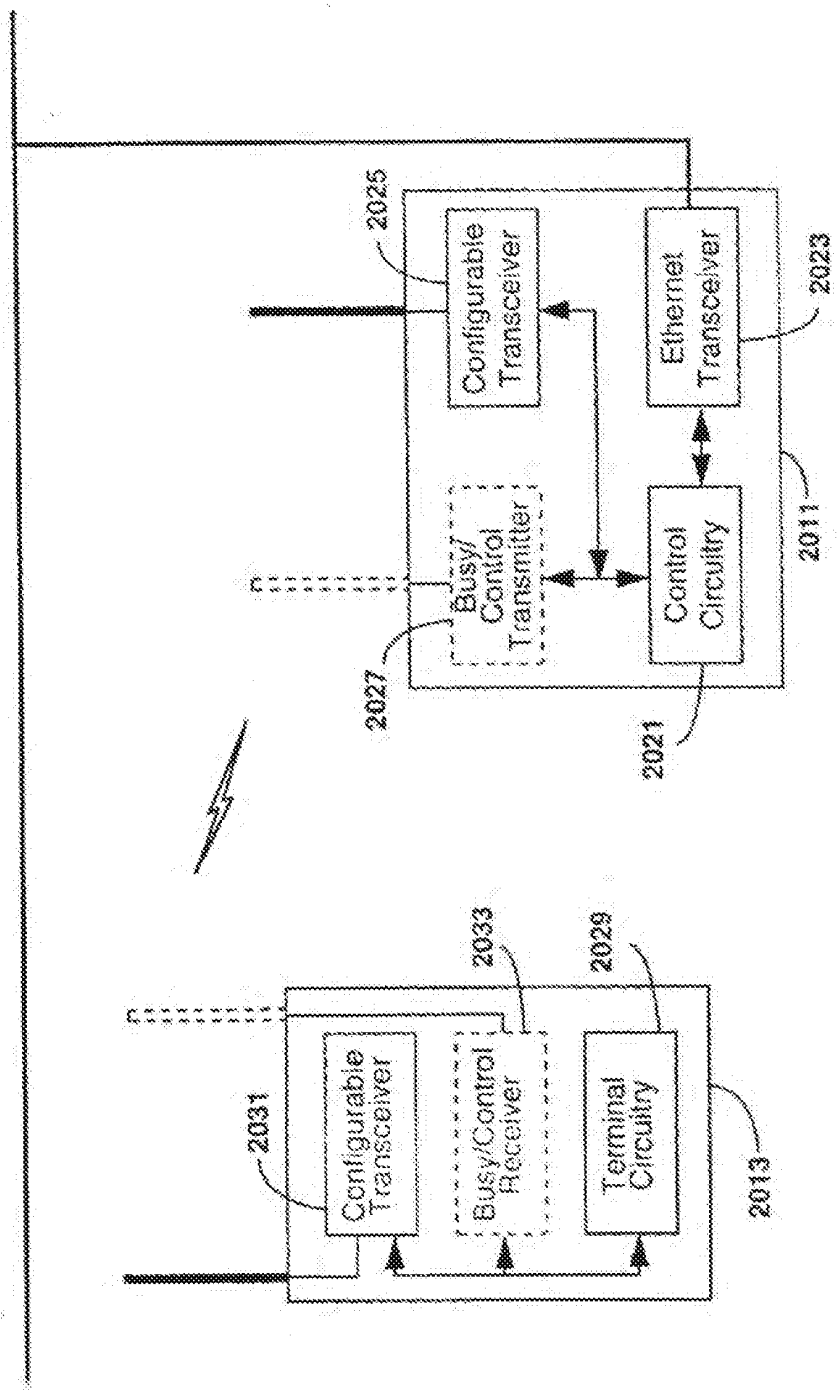
Configurable Transceiver
2025
Ethernet Transceiver
2023
Busy/ Control Transmitter
2027
Control Circuitry
2021
2011
Configurable Transceiver
2031
Busy/Control Receiver
2033
Terminal Circuitry
2029
2013

FIG. 27

SPREAD SPECTRUM TRANSCEIVER MODULE UTILIZING MULTIPLE MODE TRANSMISSION

CROSS-REFERENCE TO RELATED APPLICATIONS

This application is the National Stage of International Application No. PCT/US96/09474 filed Jun. 3, 1996, which claims priority from U.S. application Ser. No. 08/645,348 filed May 13, 1996, U.S. application Ser. No. 08/544,815 filed Oct. 18, 1995, U.S. application Ser. No. 08/513,658 filed Aug. 11, 1995, and U.S. application Ser. No. 08/457,697 filed Jun. 1, 1995 all of them are abandoned.

BACKGROUND

1. Technical Field

The present invention relates generally to communication networks utilizing spread spectrum radio transceivers, and, more specifically, to multi-hop RF networks wherein participating devices utilize spread spectrum transceivers that are capable of operating in any of a variety of spread spectrum modes. The spread spectrum modes include, for example, direct sequence transmission across a spreading bandwidth or channelized across the spreading bandwidth, frequency hopping transmission across all or a part of the spreading bandwidth, a hybrid combination of direct sequence transmissions and frequency hopping transmissions, and transmissions on a portion of the spreading bandwidth. The selection of a spread spectrum mode of operation depends upon signal conditions and characteristics of members capable of communication within the RF communication network.

2. Description of Related Art

Communication devices within a wireless local area network employ wireless communication links to transfer data and commands within the local area network. Typical units within a wireless local area network include stationary wireless access devices, mobile radio units, mobile image capture units, printing units, and other units operative with the data and commands. These units often link to a wired local area network through a wireless access device to transfer data and commands to devices located on the wired network. The wireless local area networks typically employ cellular communication techniques to provide the wireless communication links within the local are network.

One common installation of a wireless local area network serves factory automation functions. Because hard-wiring a local area network within a large, dynamic facility is both expensive and difficult, the wireless local are network provides traditional network functions as well as additional functions germane to the wireless attributes of the network. However, due to difficult transmission and interference conditions within a factory, establishing and maintaining sufficient wireless communication ties oftentimes proves difficult. Attenuation of transmitted signals, multi-path fading, ambient noise, and interference by adjacent cells often disrupts communication within the wireless local area network.

Spread spectrum transmissions are often used in attempts to overcome communication problems. With spread spectrum transmissions, the bandwidth over which information is broadcast is deliberately made wide relative to the information bandwidth of the source information. Spread spectrum transmission techniques include direct sequence transmission, frequency hopping transmission, a combination of direct sequence transmission and frequency hopping transmission, and may include other techniques that deliberately transmit over a wide spectrum.

Direct sequence spread spectrum transmitters typically spread by first modulating a data signal with a pseudo random chipping sequence at a multiple of the source data clocking rate. Once constructed, the composite modulation is coupled to a carrier via modulation techniques and then transmitted. Phase modulation is typically employed, but frequency modulation or other types of modulation may also be used. Circuitry in a receiving units receives the signal, decodes the signal at the multiple of the source data clocking rate using a particular chipping sequence, and produces received data. In a typical direct sequence system, the pseudo random chipping sequence applied by the receiving unit corresponds to all, or respective portions, of the transmitted signal. In this fashion, the receiving unit receives only intended data and avoids receiving data from adjacent cells operating on the same frequency. Direct sequence spread spectrum modes also provide significant noise rejection characteristics since each component of the source data is essentially transmitted multiple times. The received signal is therefore a composite that may be averaged or weighted to avoid receiving improper data or falsing based upon noise.

A frequency hopping system commonly uses conventional narrowband modulation but varies the modulation frequency over time in accordance with a known pattern or algorithm, effectively moving the modulated signal over the intended spreading bandwidth. The spread spectrum signal is only discernible to a receiver that has prior knowledge of the spreading function employed and which has obtained synchronization with the spreading operation at the transmitter. By spreading transmissions over the spreading bandwidth, particular portions of the spreading bandwidth within which transmission is difficult may be substantially avoided.

In the United States and many other countries, spread spectrum communications is used commercially within designated Industrial, Scientific and Medical (ISM) bands. These bands are structured as multi-use bands containing non-communications equipment such as industrial and commercial microwave ovens as well as low power consumer grade transmitters, vehicle location and telemetry systems and other spread spectrum devices of differing characteristics. Operation in ISM bands is unlicensed and uncoordinated, so equipment operating in these bands must be designed to operate successfully without knowledge of the types of devices that may be used in close proximity. The spread spectrum system design must also take into consideration the occupants of the spectrum adjacent to the ISM bands which may be both potential sources of interference to, and susceptible to interference from, various types of spread spectrum products.

Various forms of modulation across the spreading band may be utilized in commercial spread spectrum packet data communication systems. Full band direct sequence systems occupy the entire width of an ISM band. The spreading ratio, the ratio of the bandwidth of the spread spectrum modulated signal to the information bandwidth of the source modulation, determines the process gain of the system. Regulations within the United States mandate a minimum process gain of 10 dB, which is determined from ten times the logarithm of the spreading ratio. Process gain is a measure of the ability of a spread spectrum system to resist interference. The larger the spreading ratio, the more resistant the system is to interference within the receiver band-

width. Wide bandwidth modulation is reasonably resistant to low or moderate levels of interference, but even systems with relatively high process gains experience difficulties when subject to strong interference.

When system throughout requirements dictate high data rates, the minimum process gain requirements in the regulations necessitate using wide bandwidth transmissions. For example, a well-known system NCR Wavelan uses Quadrature PSK modulation at 1 million symbols per second to achieve 2 megabits per second (MBPS) data rates with a source information bandwidth available in the US ISM band at 902 MHz band. In practice, implementation constraints dictate that this system uses the full 26 MHz band. Systems operating at other data rates, including the original Norand system, utilize the full bandwidth at lower source data rates, e.g., 200 kilobits per second (KBPS). Utilization of a wider spreading bandwidth in this case provides greater rejection of multipath fading typical of the indoor RF signal propagation environment.

When it is anticipated the direct sequence systems may be used in environments with strong in-band interference, a design choice is to employ channelization to reject interference. In the case of channelized direct sequence (DS) modulation, the spreading bandwidth is reduced to a fraction of the total available bandwidth, and a frequency-agile frequency generation systems is employed. By selecting the carrier frequency of operation, communications can be established in a portion of the band where interference is not present. This technique requires the use of selective filters in the receiver intermediate frequency (IF) section to provide the necessary interference rejection. These channelized DS systems utilize interference avoidance rather than relying on process gain to reject interference.

Utilization of frequency hopping spread spectrum systems is appropriate in environments where interference within the band of operation is not confined to particular portions of the band, but may periodically arise in various parts of the entire band. Frequently hopping is also useful as a multiple access technique. Use of multiple hopping sequences concurrently within a given location allows many simultaneous communication sessions to be supported. Occasionally, devices operating on different hopping sequences will simultaneously occupy the same channel within the band for short periods of time. For moderate numbers of simultaneous hopping sequences, this occurs infrequently.

Frequency hopping also provides similar multipath rejection capabilities to wideband direct sequence modulation. If a particular channel of operation is in a fade temporarily preventing communication, a jump to a frequency sufficiently removed from the faded frequency will often allow communications to resume.

Frequency hopping systems require more protocol overhead to aid in establishing and maintaining synchronization between units sharing a given hopping sequence. Additionally, the initial acquisition of the hopping sequence may require that an unsynchronized device scan the band for a period equivalent to many hop times. The overhead for direct sequence systems is lower, with several bit-times usually allocated to receiver acquisition at the beginning of each transmission.

Spread spectrum communications may not be appropriate for some applications. For example, short hop communications such as communications between a portable hand-held terminal and a peripheral device such as a scanner or printer over a short distance is a very cost sensitive application. Spread spectrum operation requires more circuit complexity and power consumption than is tolerable for this application. Simpler FM or AM techniques such as ON-OFF-Keying (OOK) may be desirable.

Conventionally, the particular spread spectrum modulation technique is chosen according to the particular applications in which the data transceiver is to be utilized. For example, in a small warehouse having few RF barriers, minimal interference from cellular and wireless phones, and minimal amounts of communication traffic, radio transceivers used therein might only employ direct sequence spread spectrum transmission techniques. Thus, conventionally, such transceivers would be specifically designed, constructed and installed. However, after installation, if communication traffic or local noise increases, the communication might fail to function as required. Likewise, after installation, if RF barriers are installed or if the network is moved to an urban environment with a great deal of noise from neighboring installations, cellular and mobile phones, etc., the network may fail to meet the needs of the customer.

Similarly, a design might be based on a customer's needs for a small store in a downtown urban area. Because of the greater likelihood of a great amount of radio frequency traffic in the vicinity, the customer requires a radio which is free from interference from nearby radio transmissions with little concern for operating range. Consequently, a different specific type of radio would be designed to meet the needs of the corporation based upon the operating conditions in which the radio is to be used, for example using frequency hopping modulation.

In the exemplary installations mentioned above, each of the radios would be optimized to meet the needs of the customer. However, a customer's needs continually change, and, if the particular application or environment were to change justifying a different spread spectrum modulation technique, the customer is either forced to change all of their radio transceivers or live with the under-performance they currently receive.

Moreover, in a typical network installation, a client may have diverse operational requirements. For example, the particular applications of the radio unit may change several times within the same day. The site may also have areas which are relatively noise and barrier free and those which encounter heavy noise and barriers. Some areas may have high traffic volume, while others experience only occasional traffic. In such networks, a single radio transceiver design can never provide optimal performance in all areas. Sacrifices are made in the design characteristics of the transceivers in an attempt to provide best performance overall.

Similarly, in mobile contexts, a worker may require mobile communications to a vehicle based information system or forwarding to a central communication facility through a vehicle based radio WAN transceiver. The characteristics of the communications medium for this class of operation vary greatly. Interference will vary from location to location. Additionally, it is necessary to allow operation if the worker moves away from the vehicle or inside a building structure. Because each wireless local area network may have been designed for a particular set of criteria with particular spread spectrum operational abilities, mobile units may be non-functional within particular wireless local area networks.

Thus, there is a need in the art for a communication network that operates dynamically to optimize communication utilizing various spread spectrum transmission techniques, considering the characteristics of RF noise,

neighboring interference, RF barriers, participating transceiver unit capabilities and applications to be performed in such dynamic optimization.

It is another object of the present invention to provide a spread spectrum RF transceiver module, for use in wireless network devices, which utilizes multiple spread spectrum modulation techniques providing multiple configurable modes of data transmission, whereby modes may be selected to attain optimal transmission performance.

A further object of the present invention is to provide an RF data transceiver module which combines frequency hopping and direct sequence transmission techniques within a single design.

It is an object of the present invention to provide a spread spectrum RF transceiver module which utilizes common media access protocols and interfaces for multiple nominal carrier frequencies and modulation parameters.

It is a further object of the present invention to provide a spread spectrum RF transceiver utilizing 900 MHz transmission and having a standard interface with common 2.4 GHz transmission.

It is a further object of the invention to provide a spread spectrum RF transceiver which may be utilized in several different types of multi-layered data communications networks.

Another object of the present invention is to produce a wireless local area network and packet wireless data communication system that is flexible to operate reliably in varied and unpredictable RF propagation and interference environments.

A further object of the present invention is to provide a wireless RF transceiver module capable of utilizing a variety of operational modes thereby allowing large business operation to purchase a single product meeting a multiple usage needs maximizing operational flexibility and minimizing sparing and service concerns.

It is another object of the present invention to provide a modular wireless LAN modem capable of supporting multiple modes of operation under a single media access protocol with a standardized interface to a hand-held portable data terminal such that the wireless LAN modem may dynamically change modes of operation transparently to the host device, not requiring that the host device be aware of changes in the modes of operation, or that operation of higher protocol layers be impacted.

Yet another object of the present invention is to produce a modular wireless LAN modem that may be utilized for both in-premise and worker to vehicle application, and for short range communications to peripheral devices.

These and other objects of the invention will be apparent from examination of the drawings and remainder of the specification which follows.

SUMMARY OF THE INVENTION

The system and radio of the present invention to overcome the limitations of the prior devices as well as other limitations therefore may operate in any of a plurality of spread spectrum modes. A selected spread spectrum mode, or set of spread spectrum modes, is based upon system characteristics as well as transmission characteristics within an operating environment.

One particular operating environment relates to multi-hop wireless networks that are subject to in-band interference and multi-path fading. However, in these systems, members (hereinafter "transceiver devices") of the network may have different operating capabilities. Therefore, the system and radio of the present invention provide a mechanism for selecting spread spectrum modes of operation to satisfy network member limitations, data transmission throughput requirements, neighboring system non-interference requirements, as well as noise tolerance requirements.

By providing a dynamic mechanism for selecting spread spectrum modes of operation, the present invention provides many import objects and advantages that will become apparent with reference to the entire specification and drawings. In particular, in one embodiment, a communication network for collecting and communicating data is disclosed. The network comprises a wireless access device and at least one mobile terminal. The wireless access device comprises a control circuit and a first RF transceiver that selectively operates in one of a plurality of spread spectrum modes. The at least one mobile terminal comprises a second RF transceiver that operates in at least one of a plurality of spread spectrum modes. The control circuit responds to transmissions received from the first RF transceiver to evaluate communication performance and dynamically selects one of the plurality of spread spectrum modes of the first RF transceiver. Such selection also takes into consideration the at least one of the plurality of spread spectrum modes of the second RF transceiver.

Further, the plurality of spread spectrum modes of the first RF transceiver may comprise direct sequence transmission, frequency hopping, channelized direct sequence and/or hybrid frequency hopping (direct sequence) modes. The control circuitry may evaluate communication performance through reference to received signal strength indications, transmission success rate and neighboring cell operating characteristics.

Other aspects may be found in a communication system for collecting and communicating data using wireless data signal transmission. Therein a wireless access device capable of communicating with a plurality of radios comprises a radio capable of operating in a plurality of spread spectrum modes. The wireless access device also comprises a spread spectrum mode controller responsive to transmissions and data received for evaluating the data communication system and for controlling the radio to selectively operate in a spread spectrum mode among a plurality of spread spectrum modes.

The wireless access device may further comprise circuitry for evaluating the plurality of spread spectrum modes to select a spread spectrum mode of operation. Such selection may take involve the identification of a common spread spectrum mode.

Yet other aspects can be found in a data communication system having spread spectrum capability for collecting and communicating data using wireless data signal transmission. Therein, an RF transceiver comprises an modulator having a spreader, a demodulator having a despreader, a controllable oscillator attached to the modulator and demodulator, and control circuitry that both selectively enables the spreader and despreader and selectively controls the controllable oscillator to cause operation in one of a plurality of modes of spread spectrum operation.

The data communication system may further comprising a host controller that directs the control circuitry in the selection of the one of the plurality of modes of spread spectrum operation. The host controller may comprise wireless access device control circuitry. In addition, the control circuitry may wirelessly receive instruction regarding selection of the one of the plurality of modes of spread spectrum

operation. Many other aspects of the present invention will be appreciated with full reference to the specification, drawings and claims.

BRIEF DESCRIPTION OF THE DRAWINGS

FIG. **1A** is a perspective view of a wireless communication network built in accordance with the present invention which incorporates dynamically adapting spread spectrum transceivers and supporting communication protocols;

FIG. **1B** is a flow diagram illustrating the operation of a wireless access device in accordance with present invention whereby multiple wireless devices having potentially different transceiver capabilities are supported;

FIG. **1C** is a block diagram illustrating a radio transceiver built in accordance with the present invention to provide multiple modes of operation;

FIG. **1D** is a block diagram illustrating the operation of the wireless access device having the multi-mode transceiver of FIG. **1C** installed therein.

FIG. **2A** is a front elevation view of one embodiment of a hand-held portable data terminal having a transceiver module built in accordance with the present invention;

FIG. **2B** is a side elevation view of the hand-held portable data terminal of FIG. **2A** showing a module of the present invention;

FIG. **3** is a side evaluation view of the hand-held portable data terminal of FIG. **2A** showing a module of the present invention;

FIG. **4** is a side elevation view of the hand-held portable data terminal of FIG. **2A** showing a removably insertible module of the present invention;

FIGS. **4A**, **4B** and **4C** illustrate in detail the cooperation between a radio module and the hand-held portable data terminal shown in FIG. **3**.

FIG. **5** is a perspective view of another hand-held portable data terminal which may incorporate the present invention;

FIG. **6** is a side elevation view of the data terminal of FIG. **5** showing an extendibly retractable rotating carriage housing for receiving a module incorporating the present invention;

FIG. **7** is an exploded view of a radio module incorporating the present invention;

FIG. **8** is an exploded view of a radio module of the present invention further containing a scanner;

FIG. **9** is an exploded view of a radio module of the present invention contained within a PCMCIA type housing;

FIG. **10** is a functional block diagram of the architecture of the radio modules of the present invention;

FIG. **11** is a conceptual block diagram of the operation of the transmitter of FIG. **10** when operating in a direct sequence spread spectrum transmission mode;

FIG. **12** shows a conceptual diagram of the operation of the receiver utilized in conjunction with the transmitter of FIG. **11**;

FIG. **13** is a block diagram of an embodiment of a receiver of the present invention;

FIG. **14A** is a diagram of the pseudo-random number generator shown in FIG. **10**;

FIG. **14B** is a schematic block diagram illustrating the interaction of the pseudo-random number generator of FIG. **14A** with traverse filtering and formatter circuitry of FIG. **10**;

FIG. **15** is a block diagram illustrating the frequency generator circuitry as shown in FIG. **10**;

FIG. **16** is a block diagram illustrating the transmitter circuitry as shown in FIG. **10**;

FIG. **17** illustrates the circuitry for selecting between the modes of modulation of the present invention.

FIG. **18** is a block diagram of the MAC circuitry as shown in FIG. **10**;

FIG. **19** is a block diagram illustrating the host interface circuitry as shown in FIG. **10** for the radio module of FIG. **7** and for the radio/scanner module of FIG. **8**; and

FIG. **20** is a block diagram illustrating the host interface circuitry as shown in FIG. **10** for the radio module of FIG. **9**.

FIG. **21** is a diagram illustrating an alternate configuration of portable data terminals according to the present invention.

FIG. **22A** illustrates one embodiment of the data collection terminal of the present invention, having both wired and wireless communication capability.

FIG. **22B** is a diagram illustrating a specific implementation of the portable terminal of FIG. **22A** a single PCMCIA card contains not only a multi-mode wireless transceiver, but also a wired modem transceiver.

FIG. **23** is a diagram illustrating the use of portable terminals according to the present invention utilizing both wired and wireless communication in a network configuration.

FIG. **24** is a diagram illustrating the use of portable data terminals according to the present invention utilizing both wired and wireless communication to access separate subnetworks in an overall communication network.

FIG. **25***a* is a block diagram illustrating an embodiment of the present invention wherein a wireless access device uses a dedicated control/busy channel to manage a plurality of modes of communication with roaming terminals.

FIG. **25***b* is a drawing illustrating advantageous operation of the wireless access device of FIG. **25***a* when two roaming terminals encounter hidden terminal conditions.

FIG. **25***c* is a flow diagram illustrating the functionality of the wireless access device of FIGS. **25***a*–*b* in managing communication using a control/busy channel.

FIG. **26***a* is a block diagram illustrating an alternate embodiment of that shown in FIG. **25***a* wherein a wireless access device uses a separate transmitter for the dedicated control/busy channel and a roaming terminal uses either a shared multimode transmitter or a multimode transmitter and a separate busy/control channel receiver.

FIG. **26***b* is a drawing illustrating advantageous operation of the wireless access device of FIG. **26***a* when the two roaming terminals encounter hidden terminal conditions.

FIG. **26***c* is a flow diagram illustrating the functionality of the wireless access device of FIGS. **26***a*–*b* in managing communication using a control/busy channel.

FIG. **27** is a block diagram illustrating a further embodiment of the present invention wherein channel selection and operating parameters are delivered by a wireless access device on a dedicated busy/control channel with or without multimode transceiver capabilities.

DETAILED DESCRIPTION OF THE INVENTION

FIG. **1A** illustrates a communication network **1** incorporating the teachings of the present invention. The system comprises wireless access devices **2A**, **2B** and **2C**, portable transceiver units **4A**, **4B** and **4C**, a wireless code reader **5** and a peripheral device **6**. The wireless access devices **2A**

and 2B communicate directly on a wired network 3 to each other and to other wired network devices (not shown). The wireless access device 2C communicates with the wired network 3 and the wireless access device 2A via wireless transmissions through the wireless access device 2B.

The wireless access 2A–C may comprise wireless access points or wireless access servers to provide an interface among the portable transceiver units 4A–C, the code reader 5, the peripheral device 6 and devices on the wired network. Each of these wireless access devices 2A–C has associated with it a range or cell of communication. For example, the portable transceiver units 4A–C may wander in and out of range of the wireless access device 2A. Similarly, they may wander in and out of range of the wireless access devices 2B–C, i.e., they may wander from cell to cell. Each access device 2A–C, and many more as may prove necessary, are located to provide coverage of a customer's premises. Cell areas typically overlap somewhat to support ubiquitous coverage.

Because cells typically overlap slightly with one another, at any time, a hand-held radio unit may communicate with at least two wireless access devices. To avoid conflicts with transmissions in such overlap areas, it is desirable to configure neighboring cells operate with different spreading codes, different hopping sequences or different modes, for example. However, when the portable transceiver unit 4B for example passes from one cell to another, it cannot communicate with a neighboring wireless access device without changing its operating characteristics. Thus, the present invention provides several techniques for accommodating devices wishing to communicate in a new cell.

Moreover, the wireless access devices 2A–C, peripheral device 6 and code reader 5 may be capable of only some modes of wireless operation. Thus, the present invention provides a mechanism for each of the wireless access devices 2A–C to dynamically attempt to select a common mode of appropriation for each participating device within its cell. Moreover, if a given mode of operation proves dissatisfactory, a wireless access device may dynamically switch modes to attempt to achieve superior performance.

In particular, data throughput concerns and requirements, ambient noise, power consumption of portable units, previously recorded success rates, received signal strength indications, neighboring cell operating modes and success rates, and mode capabilities of participating devices are all considered in determining the mode in which to operate. Each wireless access device engages in such consideration when initially establishing communication in its cell, when attaching or detaching a participating device and as channel conditions are evaluated. In other embodiments, less than all of such considerations need be made. For example, where all transceivers are known to operate in all available modes, consideration of this factor is not necessary. Similarly, if only one cell exists or if problems in overlap regions prove minimal, consideration of neighboring cell operation need not be engaged. Likewise, received signal strength alone may be used as a mode performance indication.

Using lower power transmissions, a benefit to battery powered portable transceiver units, requires the use of more wireless access devices to cover a premises. Lower power transmissions might also or alternately require a mode having a wider spreading bandwidth or slower data transfer rate to overcome the lower received signal strength. In other cells that have minimal battery power concerns and little or no noise, a spread spectrum mode may be chosen that provides higher data transmission rates. In yet other cells experiencing significant background noise, a direct sequence spreading mode may be employed that provides greater noise tolerance.

In addition to changing modes, the wireless access devices 2A–C also support changes in various mode parameters such as data segment sizes, chipping rates, spreading code lengths, etc. By supporting dynamic changes in operating modes and mode parameters, the communication network 1 attempts to accommodate any transceiving device that enters any cell. This flexibility allows for expansion without replacing existing equipment. An older radio transceiver may be able to participate with newer transceivers that may support newer modes of operation. The network 1 would attempt to accommodate such communication in a common, older mode of operation.

RF signals are inherently subject to what is termed "multipath fading". A signal received by a receiver is a composite of all signals that have reached that receiver by taking all available paths from the transmitter. The received signal is therefore often referred to as a "composite signal" which has a power envelope equal to the vector sum of the individual components of the multipath signals received. If the signals making up the composite signal are of amplitudes that add "out of phase" the desired data signal decreases in amplitude. If the signal amplitudes are approximately equal, an effective null (no detectable signal at the receiver) results. This condition is termed "fading".

Normally changes in the propagation environment occur relatively slowly, i.e., over periods of time ranging from several tenths (1/10's) of seconds to several seconds. However, in a mobile RF environment, receivers (or the corresponding transmitters) of ten travel over some distance in the course of receiving a message. Because the signal energy at each receiver is determined by the paths that the signal components take to reach that receiver, the relative motion between the receiver and the transmitter causes the receiver to experience rapid fluctuations in signal energy. Such rapid fluctuations can result in the loss of data if the amplitude of the received signal falls below the sensitivity of the receiver.

Over small distances, the signal components that determine the composite signal are well correlated, i.e., there is a small probability that a significant change in the signal power envelope will occur over the distance. If a transmission of a data packet can be initiated and completed before the relative movement between the receiver and transmitter exceeds the "small distance" data loss to fading is unlikely to occur. The maximum "small distance" wherein a high degree of correlation exists is referred to hereafter as the "correlation distance".

As expressed in wavelengths of the carrier frequency, the correlation distance is on half (½) of the wavelength, while a more conservative value is one quarter (¼) of the wavelength. Taking this correlation distance into consideration, the size of the data packet for segmentation purposes can be calculated. For example, at 915 MHz (a preferred RF transmission frequency), a quarter wavelength is about 8.2 centimeters. A mobile radio moving a ten (10) miles per hour, or 447 centimeters per second, travels the quarter wavelength in about 18.3 milliseconds. In such an environment, as long as the segment packet size remains well under 18.3 milliseconds, significant signal fluctuations during the duration of a packet transmission is unlikely. In such an preferred embodiment, five (5) millisecond data packet segments are chosen which provides a quasi-static multipath communication environment.

The faster the relative movement between a transmitter and a receiver the greater the effect of fading. Similarly, if the relative movement is slower, fading is less pronounced. In many communication environments, the degree of fading effects varies dramatically both from time to time and from installation to installation.

One example of a receiver making such a measurement of fading can be found in the abandoned patent application of Ronald L. Mahany, U.S. Ser. No. 07/485,313, filed Feb. 26, 1990, which is incorporated herein by reference. Specifically, in that reference, a received signal strength indicator (RSSI) circuit is found in the receiver. The RSSI circuit sample the signal strength of a transmission. If the signal strength samples are evaluated in sequence and the trend analyzed, the degree of fading can be measured. If the signal strength samples decrease in value, it is likely that fading is present in the network.

A transceiver using direct-sequence spread spectrum transmission uses a spreading-code of a higher frequency than that of the data rate to encode the data to be sent. This higher frequency is achieved by increasing the chip clock rate (wherein each chip constitutes an element of the spreading-code). Using the same spreading code, the receiver decodes the received signal while ignoring minor faults which occurred in transmission, providing noise immunity and multi-path signal rejection. The frequency and length of the spreading-code can be varied to offer more or less multi-path signal rejection or noise immunity. Although it may result in improved communication, increasing the frequency or length of the spreading-code requires additional overhead which may not be justifiable unless necessary.

Frequency-hopping is the switching of transmission frequencies according to a sequence that is fixed or pseudo-random and that is available to both the transmitter and receiver. Adaptation to the communication environment via an exchange in frequency-hopping operating parameters is possible, for example, via selective control of the hopping rate or through the use of coding or interleaving. The greater the degree of frequency selectivity of the fading envelope (i.e., when fading is significant only over a portion of the spectrum of hopping frequencies), the greater the benefit of such adaptation.

Particularly, a parameter indicating the hopping rate can be varied to minimize the probability that the channel characteristics will detrimentally change during the course of a communication exchange. To vary the hopping rate is to vary the length of a hopping frame. Although multiple data (or message) exchanges per hopping frame is contemplated, the preferred hopping frame consists of a single exchange of data. For example, in a polling environment, the hopping frame might consist of: 1) a base station transmitting a polling packet to a roaming terminal; 2) the roaming terminal transmitting data in response; and 3) the base station responding in turn by transmitting an acknowledge packet. Each hopping frame exchange occurs at a different pseudo-randomly chosen frequency.

For optimization, the hop frame length is adjusted to be as long as possible, while remaining shorter than the coherence time of the channel by some safety margin. Although such adjustment does not eliminate the effects of fading, it increases the probability that the characteristics of the channel will remain consistent during each hopping frame. Thus, in the preferred embodiment, if the polling packet transmission is successfully received, the probability of successful receipt of the data (or message) and acknowledge is high.

Another parameter for changing frequency-hopping performance is that of coding. Coding on the channel for error correction purposes can be selectively used whenever the probability of data or message loss due to fading is high. In particular, coding methods which provide burst error correction, e.g., Reed-Solomon coding, can be applied if the hop length is likely to exceed the coherence time of the channel. Such coding methods allow some portion of the data to be lost and reconstructed at the expense of a 30–50% reduction in throughput. The operating parameter for coding indicates whether coding should be used and, if so, the type of coding to be used.

An operating parameter indicating whether interleaving should be used also help to optimize the communication channel. Interleaving involves breaking down the data into segments which are redundantly transmitted in different hopping frames. For example, in a three segment exchange, the first and second segments are sequentially combined and sent during a first hopping frame. In a subsequent hopping frame, the second and third segments are sequentially combined and transmitted in a third hopping frame. The receiving transceiver compares each segment received with the redundantly received segment to verify that the transmission was successful. I errors are detected, further transmissions must be made until verification is achieved. Once achieved, the transceiver reconstructs the data from the segments.

Other methods of interleaving are also contemplated. For example, a simpler form of interleaving would be to sequentially send the data twice without segmentation on two different frequencies (i.e., on two successive hops).

As can be appreciated, interleaving provides for a redundancy check but at the expense of data or message throughput. The interleaving parameter determines whether interleaving is to be used and, if so, the specific method of interleaving.

In addition, any combination of the above frequency-hopping parameters might interact to define an overall operating configuration, different from what might be expected from the sum of the individual operating parameters. For example, selecting interleaving and coding, through their respective parameters, might result in a more complex combination scheme which combines segmentation and error correction in some alternate fashion.

In the United States, data communication equipment operating in the ultra-high frequency (UHF) range under conditions of frequency modulation (FM) is subject to the following limitations.

1) The occupied band width is sixteen kilohertz maximum with five kilohertz maximum frequency deviation.
2) The channel spacing is 25 kilohertz. This requires the use of highly selected filtering in the receiver to reduce the potential for interference from nearby radio equipment operating on adjacent channels.
3) The maximum output power is generally in the range of ten to three hundred watts. For localized operation is a fixed location, however, transmitter power output may be limited to two watts, maximum, and limitations may be placed on antenna height as well. These restrictions are intended to limit system range so as to allow efficient re-use of frequencies.

For non-return to zero (NRZ) data modulation, the highest modulating frequency is equal to one half the data rate in a baud. Maximum deviation of five kilohertz may be utilized for a highest modulation frequency which is less than three kilohertz, but lower deviations are generally required for higher modulation frequencies. Thus, at a rate of ten thou-

sand baud, and an occupied bandwidth of sixteen kilohertz, the peak FM deviation which can be utilized for NRZ data may be three kilohertz or less.

Considerations of cost versus performance tradeoffs are the major reason for the selection of the frequency modulation approach used in the system. The approach utilizes shaped non-return-to-zero (NRZ) data for bandwidth efficiency and non-coherent demodulation using a limited-discriminator detector for reasonable performance at weak RF signal levels. However, the channel bandwidth constraints limit the maximum data "high" data rate that can be utilized for transmitting NRZ coded data. Significant improvements in system throughput potential can be realized within the allotted bandwidth by extending the concept of adaptively selecting data rate to include switching between source encoding methods. The preferred approach is to continue to use NRZ coding for the lower system data rate and substitute partial response (PR) encoding for the higher rate. The throughput improvements of NRZ/PR scheme over an HRZ/NRZ implementation are obtained at the expense of additional complexity in the baseband processing circuitry. An example of a transceiver using such an approach can be found in the previously incorporated patent application of Ronald L. Mahany, U.S. Ser. No. 07/485,313, filed Feb. 26, 1990, now abandoned.

Partial response encoding methods are line coding techniques which allow a potential doubling of the data rate over NRZ encoding using the same baseband bandwidth. Examples of PR encoding methods include duobinary and modified duobinary encoding. Bandwidth efficiency is improved by converting binary data into three level, or pseudo-ternary signals. Because the receiver decision circuitry must distinguish between three instead of two levels, there is a signal to noise (range) penalty for using PR encoding. In an adaptive baud rate switching system, the effects of this degradation are eliminated by appropriate selection of the baud rate switching threshold.

Since PR encoding offers a doubling of the data rate of NRZ encoded data in the same bandwidth, one possible implementation of a NRZ/PR baud rate switching system would be a 4800/9600 bit/sec system in which the low-pass filter bandwidth is not switched. This might be desirable for example if complex low-pass filters constructed of discrete components had to be used. Use of a single filter could reduce circuit costs and printed circuit board area requirements. This approach might also be desirable if the channel bandwidth were reduced below what is currently available.

The implementation with bandwidth available is to use PR encoding to increase the high data rate well beyond the 9600 bit/sec implementation previously described. An approach using 4800 bit/sec NRZ encoded data for the low rate thereby providing high reliability and backward compatibility with existing products, and 16K bit/sec PR encoded transmission for the high rate may be utilized. The PR encoding techniques is a hybrid form similar to duobinary and several of its variants which has been devised to aid decoding, minimize the increase in hardware complexity, and provide similar performance characteristics to that of the previously described 4800/9600 bit/sec implementation. While PR encoding could potentially provide a high data rate of up to 20K bit/sec in the available channel bandwidth, 16K bit/sec is preferable because of the practical constraints imposed by oscillator temperature stability and the distortion characteristics of IF bandpass filters.

All of the above referenced parameters must be maintained in local memory at both the transmitter and the receiver so that successful communication can occur. To change the communication environment by changing an operating parameter requires both synchronization between the transceivers and a method for recovering in case synchronization fails.

In one embodiment, if a transceiver receiving a transmission (hereinafter referred to as the "destination") determines that an operating parameter needs to be changed, it must transmit a request for change to the transceiver sending the transmission (hereinafter the "source"). If received, the source may send an first acknowledge to the destination based on the current operating parameter. Thereafter, the source modifies its currently stored operating parameter, stores the modification, and awaits a transmission from the destination based on the newly stored operating parameter. The source may also send a "no acknowledge" message, rejecting the requested modification.

If the first acknowledge message is received, the destination modifies its currently stored operating parameter, stores the modification, sends a verification message based on the newly stored operating parameter, and awaits a second acknowledge message from the source. If the destination does not receive the first acknowledge is not received, the destination modifies the currently stored parameter, stores the modification as the new operating parameter, and, based on the new parameter, transmits a request for acknowledge. If the source has already made the operating parameter modification (i.e., the destination did not properly receive the first acknowledge message), the destination receives the request based on the new parameters and response with a second acknowledge. After the second acknowledge is received, communication between the source and destination based on the newly stored operating parameter begins.

If the destination does not receive either the first or the second acknowledge messages from the source after repeated requests, the destination replaces the current operating parameter with a factory preset system-default (which is also loaded upon power-up). Thereafter, using the system-default, the destination transmits repeated requests for acknowledge until receiving a response from the source. The system-default parameters preferably define the most robust configuration for communication.

If after a time-out period the second request for acknowledge based on the newly stored operating parameters is not received, the source restores the previously modified operating parameters and listens for a request for acknowledge. If after a further time-out period a request for acknowledge is not received, the source replaces the current operating parameter with the factory preset system-default (which is the same as that stored in the destination, and which is also loaded upon power-up). Thereafter, using the common system-default, the source listens for an acknowledge request from the destination. Once received, communication is re-established.

Other synchronization and recovery methods are also contemplated. For example, instead of acknowledge requests originating solely from the destination, the source might also participate in such requests. Similarly, although a polling protocol is used to carry out the communication exchanges described above, carrier-sense multiple-access (CSMA) or busy tone protocols might alternately be used.

In the embodiment illustrated in FIG. 1A, various modes of operation are dynamically controlled by the wireless access devices 2A–C. Such control involves the consideration by each wireless access device of many factors such as: 1) received signal strength; 2) success/fail rates; 3) mode capabilities of participating devices; 4) neighboring access device operation and performance; 5) application support

required; and 6) power concerns. In addition to modifying the parameters of a particular mode (as previously mentioned), the wireless access devices may also select from a plurality of modes (as described in more detail below in reference to FIG. 10).

FIG. 1B is a flow diagram illustrating the operation of a wireless access device in accordance with present invention whereby multiple wireless devices having potentially different transceiver capabilities are supported. In particular, a wireless access device manages ongoing communication within its cell with a previously selected mode and mode parameters at a block **401**. At a block **403**, the wireless access device identifies an attach request from a wireless transceiver (hereinafter the "requesting transceiver") that may have wandered into the cell. The access device **403** responds at a block **405** by identifying the available modes of operation of the requesting transceiver. At a block **407**, the modes are added to a mode table, which stores the available modes of all the participating devices. Note that a requesting transceiver only communicates the availability of those modes which are both possible (determined by the transceiver's design) and useful (determined by a current application).

If the requesting device is capable of operating in the currently selected mode, as determined at a block **409**, the wireless access device communicates mode information and parameters to the requesting transceiver at a block **413**. Thereafter, the wireless access device returns to the block **401** and services all participating devices including the requesting device in the current mode with current parameters.

Alternatively, if the requesting device has a limited number of operating modes, at the block **409** the current mode may not be a possibility. If the requesting device is not capable of operating in the current mode, the wireless access device attempts to select a new mode at a block **411**. If at least one common mode can be found, e.g., if all the participating devices and the requesting device have at least one common mode, the wireless access device chooses the common mode that it believes will offer optimal performance. Thereafter, at a block **413**, the wireless access device communicates the selected mode and parameter information to the requesting transceiver at the block **413** and returns to the block **401**. At the block **401**, because a new mode has been selected, the wireless access device vectors to service the event at a block **419**. At a block **421**, the wireless access device broadcasts the mode and parameter information, and, at a block **423**, changes its own mode. Thereafter, the wireless access device returns to service ongoing communication in that mode at the block **401**.

If however a common mode cannot be found for a requesting transceiver at the block **411**, the requesting transceiver is rejected from participating. In such a case, the customer must identify the radios causing the limitations and upgrade them. In another embodiment, the wireless access device operates in a time shared configurations, switching between two or more modes in a sequential fashion. In this embodiment, however, the overall delays in the system may still justify upgrading the radio transceiver(s) causing the limitations.

During the course of ongoing operation at the block **401**, the wireless access device monitors channel performance (a variety of factors described in more detail above), and compares such performance to available other common modes of operation and considers potential parameter modifications. In particular, as represented by the block **429**, if channel conditions degrade below a predefined threshold, the wireless access device vectors to consider changing modes. At a block **431**, the wireless access device consults the mode table. If a new mode is available and warranted, per a determination at a block **433**, the wireless access device responds by selecting an alternate common mode at the block **435**, resets the conditions that caused the vectoring and returns to the block **401** to complete the mode change via the blocks **419**, **421** and **423**. Similarly, each time a participating transceiver detaches from the cell (through either active detachment or aging) as represented by an event block **445**, the wireless access device removes that transceiving device's mode information from active status in the mode table and attempts to choose a better common mode via the blocks **431**, **433**, **435** and **437**. Although not shown, the wireless access device might also periodically attempt to choose a better common mode, without requiring channel conditions to change or degrade or participants to detach.

FIG. 1C is a block diagram illustrating a radio transceiver used in wireless access devices and any transceiving device, such as a printer, code reader, hand-held terminal, etc., and built in accordance with the present invention to support multiple modes of operation. The transceiver module **501** comprises control circuitry **503**, a modulator **505**, a demodulator **507**, and oscillator **509** and a switch circuit **511**. The control module may have either an internal or external antenna attached thereto, i.e., an antenna **513**.

The control circuitry **503** manages the operation of the other components of the transceiver module **501**. The control circuitry **503** receives instructions and data to be transmitted from a host unit (not shown) via a wired communication link **515**. The control circuitry **503** deliver such data to the modulator **505** for modulation (and possibly spreading). Thereafter, the data is delivered to the antenna **513** via the switch **511**. Data and control signals received by the antenna **513** passes through the switch **511** to the demodulator **507** for demodulation (and possibly despreading). The control circuitry **503** receives the demodulated data or control signals for processing and/or delivery to the host unit through the link **515**.

The control circuitry **503** causes the selection of operating parameters and modes as described previously and in reference to FIG. 1B. Specifically, the control circuitry **503** sets the configuration of the modulator **505**, demodulator **507** and oscillator **509**. For example, to operate in a direct sequence spread spectrum mode, the control circuitry **503**: 1) sets the base frequency of the oscillator **509**; 2) sets related mode parameters such as the chipping rate; and 3) delivers enable signals and a spreading code to a spreader circuit **516** and despreader circuit **517** of the modulator **505** and demodulator **507**, respectively. To operate in a frequency hopping mode, the control circuitry **503**: 1) establishes related parameter settings; 2) disables the spreading and despreading circuits **516** and **517**; 3) selects a hopping sequence of frequencies; and 4) directs the oscillator **509** through the sequence. To operate in a hybrid, direct sequence, frequency hopping mode, the control circuitry **503**: 1) establishes related parameter settings; 2) delivers enable signals and a spreading code to a spreader circuit **516** and despreader circuit **517**; 3) selects a hopping sequence of frequencies; and 4) directs the oscillator **509** through the sequence. Similarly, the control circuitry **503** may select any modes, e.g., the modes identified in reference to FIG. **10** below, and set all parameters related thereto.

FIG. 1D is a block diagram illustrating the operation of the wireless access device having the multi-mode transceiver of FIG. 1C installed therein. In particular, a trans-

OTHER PUBLICATIONS

News Release "Norand Introduces Enhanced Wireless LAN Capabilities", May 16, 1995, by Norand Corporation, Cedar Rapids, Iowa, pp. 1–4.
News Release "Ositech Communications Inc. Will Release Next Month the Jack of Diamonds, A Type II PC Card", dated May 31, 1995.
Roger C. Alford, "The PCMCIA Redefines Portability", Under The Hood, date unknown.
Gary Legg, "Special Components Simplified Interface to PCMCIA cards", Jun. 10, 1993 EN., pp. 61, 63–64, 66 and 68.
Carole Patton, "Radio Transceiver Circuit Card Acts as Wireless Modem in PCs", Info World, Mar. 28, 1988, p. 18.
John R. Gyorki, "New Deal For Smart Cards", Machine Design, Jun. 1, 1993, pp. 38–40, 42, and 44.

* cited by examiner

ceiver module **501** (as described in relation to FIG. 1C) is installed within a wireless access device **523**. The wireless access device **523** contains control circuitry **525** and interface circuitry **527** for communicating with a wired network **529**. In addition to providing typical access device service, the control circuitry **525** of the wireless access device **523** manages all mode and parameter changes for the transceiver module **501**. The control circuitry **525** monitors, among other factors, the historical performance characteristics of each mode, neighboring access device modes, parameters and performance and current mode performance (via received signal strength indications and success/failure rates). The control circuitry **525** also maintains and updates the mode table, attachment and detachment of participants, as described above in reference to FIG. 1B for example. The control circuitry **525** performs such functionality via control signals delivered to the control circuitry of the transceiver module **501**.

When installed in a portable/mobile or stationary transceiver unit (e.g., peripheral device, code reader, hand-held terminal, etc.), a transceiver module responds to communication control through commands received from the wireless access device while attempting to attach. Such commands direct the mode and parameters of operation of the transceiver module in the transceiver unit. In addition, the control circuitry of the transceiver module **501** directs entry of a default mode and default parameters prior to receiving direction from a wireless access device. Although the transceiver module **501** may receive additional mode and parameter commands from the host controller within the transceiver unit, it need not do so. Such local control by a transceiver unit, however, may prove advantageous in other wireless network embodiments or in specific applications. For example, other network embodiments might involve only two transceiver units without a wireless access device. As such, the transceiver units may negotiate a mode and related parameters amongst themselves, controlling such changes via host processors within the transceiver units. Negotiation of mode and parameter changes might also involve channel condition monitoring or other factors currently assigned to the wireless access device.

FIG. 2A illustrates a hand-held portable data terminal which incorporates the present invention, designated generally by the numeral **10**. The data terminal **10** may be one of several data terminals in a local area network which utilizes radio frequency (RF) communications for data transfer. The data terminal **10** illustrated is a mobile data unit that includes a radio transceiver unit incorporating the present invention. Of course, as has been previously described, the present invention may be incorporated into stationary units as well as mobile units. Further, the stationary units may comprise wireless access points, other function performing devices such as printers, stationary scanners, or other devices. Moreover, mobile units incorporating the present invention need not comprise the hand-held radio format illustrated in FIG. 2A. The mobile units could be installed in vehicles, worn by a user, or installed in any other fashion that causes the device to be mobile.

The data terminal **10** includes an antenna **12** is disposed at the top end **14** of the data terminal for radio frequency transmission and reception. The data terminal may include a display screen **16** for displaying program information and for interfacing the operator with the data terminal **10**. The display screen **16** may be a reflective super-twist liquid crystal display (LCD), for example. The data terminal **10** may include a keypad **18** having a plurality of keys for entering data into the data terminal **10** and for control of the data terminal **10** by the operator.

FIG. 2B shows the data terminal **10** of FIG. 2A which includes a module in which circuitry for accomplishing the present invention is disposed. The data terminal **10** has a modularly attached radio module **20** which also contains scanning circuitry in addition to radio circuitry. The antenna **12** of FIG. 2A is affixed to the radio/scanner module **20** and may be a type suitable for portable battery powered electronic devices. The radio/scanner module **20** has an extended outer shell **24** in order to contain both the radio and the scanner circuitry. A button **26** may be disposed on either or both sides of the radio/scanner module **20** to activate the scanning circuitry and scan encoded data, such as that contained in a bar code or two dimensional image. The module **20** could, in another embodiment, include a digital camera or other functional equipment. As illustrated, the radio/scanner module **20** is constructed to be modularly received by a recession **28** in the data terminal such that a continuous unit is formed by attaching the module **20** to the data terminal.

FIG. 3 shows a side view of another embodiment of a data terminal **10** with an alternate modular radio module attached thereto. The module **30** includes a radio incorporating the teachings of the present invention but does not include the image capture electronics of the radio/scanner module **20** of FIG. 2B. Because the module **30** is more compact than radio scanner module **20** of FIG. 2B, the body of radio module **30** is generally flush with the body of the data terminal **10** when attached thereto.

FIG. 4 shows a data terminal **10** that is removably attachable to the radio/scanner module **20** of FIG. 2B. The motion required for attachment of the module **20** to the data terminal **10** generally follows the direction of line **32**. The module **20** is positioned toward the terminal **10** and then locked into place by a downward movement. L-shaped latches **34** may be used to removably secure the module **20** to the terminal **10**.

FIGS. 4A, 4B and 4C illustrate in detail the cooperation between a radio module and the hand-held portable data terminal shown in FIG. 3. The radio module **30** houses a radio unit **340**. An antenna connector **342** connects to antenna connector pins **344** at an end of the radio unit **340** to provide electrical connection to an antenna which may be internally or externally mounted on the module **30**. An array of connecting pins **346** preferably connect the radio unit **340** to the data terminal which may have a receptacle for receiving the connecting pins **346**. The radio module **30** may include a hand strap **348**, one end of which being connected to the module **30** and the other end being connected to the terminal **10**, to facilitate manipulation of the terminal **10** in one hand and to prevent accidental dropping, for example.

FIG. 5 depicts another type of hand-held portable data terminal **36** that incorporates the present invention and that is designed to receive standard PCMCIA computer feature card modules. The terminal **36** may have a module carriage housing **38** which may receive various types of PCMCIA cards **40**: Type I (3.3 mm in thickness), Type II (5.0 mm in thickness) or Type III (10.5 mm in thickness) PCMCIA sized modules for example.

FIG. 6 shows the data terminal of **36** of FIG. 5 having a rotatably extendible and retractable carriage housing **38**. The carriage housing **38** is shown in the extended position holding a Type III PCMCIA module **42** which may, for example, contain the radio circuitry of the present invention.

FIG. 7 is an exploded view of the internal components of a radio module **30** of the present invention such as the module **30** of FIG. 3. The circuitry of radio module **30** of the present invention such as the module **30** is preferably

mounted on a circuit card assembly (CCA) board **44** containing, for example, the transmitter and receiver electronic components (not shown). The radio CCA **44** may have metallic coverings, or cans (not shown), soldered to the board over critical radio components to provide two-way electromagnetic shielding to reduce or eliminate radio frequency interference.

In embodiment of FIG. **7**, the radio module CCA **44** is contained within a metallic radio cover **46** to provide electromagnetic shielding of the radio CCA **44**. The radio CCA **44** and radio cover **46** may be attached to a mounting frame **48** which provides supporting structure for the internal components of the radio module **30**. Radio cover **46** and mounting frame **48** may be fabricated of ABS type plastic or of a conductive metal to provide electromagnetic shielding. The radio CCA **44** and the radio cover **36** may be attached to the mounting frame **48** by a plurality of fasteners **50** which may be four #2 screws in a preferred embodiment.

An internal antenna **52** may be connected to the radio circuitry of the radio CCA **44** in lieu of the external linear antenna **12** shown in FIG. **2A** and completely contained within the radio module **30**. The radio module **30** may utilize the antenna means of U.S. Pat. No. 5, 322,991 issued Jun. 21, 1994 and assigned to NORAND Corporation of Cedar Rapids, Iowa, the assignee of the present application, Said U.S. Pat. No. 5,322,991 is hereby incorporated by reference in its entirety. The antenna **53** may comprise a quarter-wavelength single loop of wire of approximately 83 mm for transmissions near 900 MHz. When the loop antenna **52** is driven by the output of the radio module **44**, a uniform circulatory current flowing through the antenna **52** results in a radiation pattern similar to that of a magnetic dipole. The antenna **52** preferably has a nominal impedance of **50**Ω.

An internal shield **56** may be utilized and inserted between the radio circuit card assembly (CCA) **44** and the radio interface card (RIC) **58** which contains the electronic circuitry necessary6 to interface the electronics of the radio CCA **44** with the electronics of the data terminal **10** of FIG. **2A**. The radio interface card **58** may be a type used for a 2.4 GHz radio since the interface to the radio CCA **44** is baseband. The 900 MHz radio **44** of the present invention may be designed to appear as a 2.4 GHz radio accepting the same frequency control inputs and employing the same media access control protocols as a 2.4 GHz radio.

Electrical connectors **60** may be mounted at an end of the radio interface card **58** for providing electrical connection to the CPU board (not shown) of the portable data terminal with which the radio module **30** is utilized, such as terminal **10** of FIG. **2A**. A mounting fastener **62**, which may be a screw, fastens the radio interface card to the radio module assembly **30**. An acoustic-electric transducer such as buzzer **64** may be included with the radio module **30** and electronically connected to the radio CCA **44** 5to provide the operator with audio information and cues, for example a beep or buzz when the radio module **30** is powered on. Frame mounting screws **66** may be utilized to fasten the assembly to the outer shell **68** via mounting frame **48**. The entire module assembly may be wrapped in a metallic foil to provide electromagnetic shielding to the radio module **30**. The outer shell **68** is preferably a type of ABS plastic and is formed to modularly and contiguously fit the recession **28** of the data terminal **10** as shown in FIG. **2B**.

FIG. **8** is an exploded view of the radio/scanner module **20** illustrated in FIGS. **2B** and **4**. The components and assembly thereof of the radio/scanner module **20** are substantially similar, with some slight modifications thereof where necessary, to that of the radio module **30** of FIG. **7**, the principle difference being the addition of scanner circuitry in the radio/scanner module **20** for reading optically readable data files such as standard bar codes. The radio/scanner module **20** includes radio interface card **58** with electrical connectors **60**, mounting frame **48**, internal shield **56**, radio CCA **44**, antenna **52**, radio cover **46**, and buzzer **64** as shown in FIG. **7** (and as described in the discussion of FIG. **7**).

In addition to the above components, the radio/scanner module **20** includes a scanner printed circuit board **70** on which the scanner electronic circuitry are mounted. A flex circuit connection assembly **72** may be utilized to interconnect the electronic circuitry, such as the circuitry of scanner card **70** and interface card **58**. The outer shell **74** of the radio scanner module is substantially similar to the outer shell **68** of radio module **30** as shown in FIG. **7**, modified to accommodate the additional components of the radio/scanner module **20**.

A rubber nose end cap **76** may be attached to the forward end of the outer shell **74** for providing impact shock absorption and protection. A seal label **78** may be used to provide an adhesive seal between rubber nose end cap **76** and outer shell **74**. A lens **80** mounted with a lens seal support **82** may be disposed in the rubber end cap **76** to provide a sealed light aperture for the scanner circuitry. Scanning of an optically readable data file may be controlled with a scan button **86** which covers an input keyboard and elastomer **84** and is supported by a scan button bezel **88** mounted in a button aperture **90** on a side of the outer shell **74**. The radio/scanner may have a plurality of scan or input buttons **86**. For example, an additional button may be provided on the side of the outer shell **74** opposite the button **86** shown in FIG. **8**.

Frame mounting screws **92** are provided to mount the mounting frame **48** containing the module assembly to the outer shell **74**. The outer shell **74** and radio/scanner module are formed to modularly and contiguously attach to the data terminal **10** as illustrated in FIGS. **2B** and **4** in a manner substantially similar the attachment of radio module **30** to data terminal **10**. The entire module assembly **20** may be wrapped in a metallic foil to provide electromagnetic shielding to the radio module **20**.

FIG. **9** is an exploded view of the PCMCIA Type III radio module **42** of FIG. **6**. The PCMCIA radio module **42** may also be constructed within a smaller sized PCMCIA module such as Type II or Type I enclosure by combining the circuitry of the radio interface card **58** and the radio circuit card assembly **44** on a single printed circuit board, for example. The PCMCIA radio module **44** may contain the radio circuit card assembly **44** and the radio interface card **58** of FIGS. **7** and **8**. The radio interface card **58** is preferably adapted to conform to PCMCIA device interface standards for utilization in PCMCIA radio module **42**. The circuitry of the radio CCA **44** and the radio interface card **68** may be interconnected by a board to board connector **94**. Alternatively, all of the circuitry of the RIC **58** and the CCA **44** may be combined on a single printed circuit board for smaller sized radio modules (**20**, **30** or **42**).

Standoffs **96** may be soldered directly to the radio interface card **58** and are provided to separate the radio CCA **44** from the radio interface card **58** and to provide attachment thereto with fasteners **98** (preferably #2–56 screws). The screws **98** preferably attach the radio CCA **44** to a custom PCMCIA Type III frame **100** which provides structural support and protection of the circuit boards **44** and **58**. A PCMCIA electrical receptacle **102** may be provided to electrically connect the radio module to standard PCMCIA

connectors in the electronic equipment in which the module **42** is to be utilized, such as the data terminal **36** of FIGS. **5** and **6**.

An antenna connector **104** may be mounted on the radio CCA **44** for connection of the module to an antenna which may be, for example, the antenna **12** of FIG. **2A**, the antenna **52** of FIGS. **6** and **7** of the antenna means of U.S. Pat. No. 5,322,991 issued Jun. 21, 1994 incorporated herein. Alternate antenna clips **106** may be utilized for adapting the radio module **42** to various antenna connection configurations.

The PCMCIA radio module **42** may be contained within top and bottom covers **108** and **110** respectively which are preferably comprised of tin plated cold rolled steel. The module covers **108** and **110** may provide two way electromagnetic shielding of the radio frequency circuitry. When the radio module **42** is assembled and contained within top cover **108** and bottom cover **110** the module preferably conforms to PCMCIA Type III dimensions. The module **42** may also be adapted to conform to PCMCIA Type II or Type I dimensions as well.

The transceiver module as shown in FIG. **9** may be utilized in a standard desktop or portable computer such as a laptop computer which is designed to utilize standard PCMCIA computer modules. The portable computer may be implemented as part of a multilayered communication network such as a communications node to communicate, for example, with several data terminal in a connected wired network, as well as with nodes in the wireless network. In this fashion, the computer could serve as a wireless access point, a wireless access server, or another type of wireless device providing access to the wireless network. A preferred embodiment of the present invention implements Layer 1 (the physical layer) and the medium access control (MAC) sub-layer of Layer 2 (the data link layer) of the International Standards Organization Reference Model (ISORM) operating under an ODI or NDIS driver. A driver interface to the MAC sub-layer allows the utilization of industry standard multi-layer communications protocol above the MAC sub-layer.

FIG. **10** is a functional block diagram of an embodiment of the radio modules **20**, **30** and **42** of the present invention. The components of FIG. **10** implement the teachings of the present invention by causing the radio module to be operable in any of a plurality of spread spectrum modes depending upon system and transmission conditions. The components illustrated could be found in a mobile unit or a stationary unit to provide equivalent functionality in the units. In one embodiment, at least one stationary unit and a plurality of mobile units in a wireless local area network are capable of operating in a plurality of spread spectrum modes such as direct sequence, channelized direct sequence, frequency hopping, channelized frequency hopping, or hybrid modes. The components illustrated in FIG. **10** allow the radio modules to operate in such a fashion.

The antenna section includes an antenna **112** for transmitting and receiving radio frequency energy. The antenna **112** may be one of the antennas described in the discussion of FIGS. **7**, **8** and **9**. The radio circuitry corresponds to the radio circuitry of the radio CCA **44** of FIGS. **7**, **8** and **9** and contains the receiver circuitry **114**, the transmitter circuitry **118** and the frequency generator ("FREQ. GENERATOR") **116**.

The radio frequency (RF) transceiver **298** of the present invention comprises a receiver **114** and a transmitter **118**. The transmitter **118** preferably comprises a data formatter and spreader ("BASE BAND FORMATTER/SPREADER") **124**, a selectable transversal filter **150** comprising programmable transversal filters ("PROGRAMMABLE TRANSVERSAL FILTER") **146** and **148** (See FIG. **11**), a binary phase shift keying (BPSK) modulator ("BPSK MODULATOR") **130**, and a transmitter up converter and linear transmit power amplifier ("TX UP CONVERTER & AMP") **314**. The receiver **114** preferably comprises a receiver down converter **304**, a selectable bandwidth intermediate frequency (IF) stage ("SELECTABLE BW IF") at a fixed IF center frequency, a non coherent I/Q base band converter ("BASEBAND CONVERTER"), and a demodulator/despreader ("DEMOD. DESPREAD.").

A common radio frequency bandpass filter ("BPF") **399** is shared by both the transmitter **114** and the receiver **118**. The transceiver **298** is coupled to an antenna **112** through an antenna switch circuit **302**. A frequency generator **116** is common to both the receiver **114** and the transmitter **118**, producing a frequency agile main VCO output ("MAIN VCO") **196**, and an auxiliary output ("AUX VCO ") **334** at twice the IF frequency. A divided by 2 circuit (**316** and **318**) in the transmit path of the auxiliary VCO signal **334** is activated when the transceiver **298** is switch to the transmit mode.

The transmit operation the media access control (MAC) microprocessor ("MAC μP") **128** enables the various transmit circuits through the control bus (see CONTROL of FIG. **18**). In particular, however, the MAC μP **128** controls the various components illustrated in FIG. **10** as illustrated. However, in other embodiments of the present invention, the MAC μP **128** may control only a portion of the components or even more of the components. To implement the teachings of the present invention, the MAC μP **128** controls the various elements illustrated in FIG. **10** so as to perform transmission and reception in any of the various spread spectrum modes. In order to accomplish such various modes, the MAC μP **128** must control the frequency generator **116** to cause modulation over all of a spreading bandwidth via variations in the MAIN VCO frequency. In addition, the MAC μP **128** provides control to the modulator **130**, RECEIVER DOWN CONVERTER **304**, TX UP CONVERTER & AMP **314**, the SELECTABLE BW IF **322**, the MODULATOR **130**, the SELECTABLE TRANSVERSAL FILTER **150**, the DEMODULATOR DESPREADER **184**, and the FORMATTER/SPREADER **124** in order to cause the circuitry to perform in the various spread spectrum modes.

As is known, each of the various spread spectrum modes requires packaging, modulating, transmitting, and receiving data in particular formats and frequencies. Thus, the MAC μP **128** provides control over the elements illustrated in FIG. **10** in a fashion so as to enable each of the various spread spectrum modes. Techniques known in the art may be employed to cause the components illustrated in FIG. **10** to perform in particular spread spectrum modes.

The functions of the baseband formatter/spreader **124** may be contained in a digital application-specific integrated circuit, or ASIC, (not shown) with circuitry configurable to the desired transmission mode by the control microprocessor **128**. The ASIC preferably produces a clock at the correct data rate for the selected mode which is used to time serial transfer of a data frame from the transmit data output of the MAC μP **128** (see TXD of FIG. **18**).

In the direct sequence (DS) modes, the data is mapped into I/Q symbols for either BPSK or QPSK modulation. The ASIC generates a synchronous chip clock at a multiple of the symbol rate that is applied to the pseudo-random number (PN) generator of FIG. **14A** to produce a chipping sequence at the selected spreading ratio. The exact chipping sequence

is selected by programming the feedback select of FIG. **14A**. The chipping sequence is multiplied with the I/Q data symbols by use of exclusive OR gates. The selected data rate and spreading ratio determine the main lobe bandwidth of the transmitted signal. The bandwidth of the main lobe and side lobes are reduced by applying the transversal filters (**146** and **148** of FIG. **14B**), which comprise circuitry of the transversal filter **150** of FIG. **10** with the shift registers operating at the chipping rate rather than the symbol rate. The main lobe bandwidth is limited to approximately 1.6 times the chip clock frequency.

The remainder of the Transmitter **118** is a standard I/Q modem. The I/Q waveforms are applied to a quadrature PSK modulator operating at ½ the Auxiliary VCO frequency. The modulated signal is filtered to reduce harmonic content, then undergoes a second conversion with the Main VCO output **196** to produce a final output frequency. This signal is filtered to reduce the image of the mix product from this second conversion, and then amplified by the antenna **112** through the antenna switch **302** and RF bandpass filter **300**.

In the receive mode, the receiver circuitry **114** is switched on and the transmitter circuitry switched off through the control interface. Incoming signals present at the antenna are amplified and converted to the IF frequency by mixing with the main VCO output **196**. The output of the receiver down converter **304** is applied to the selectable bandwidth IF filter **322**, which is programmed to the correct bandwidth for the selected mode of operation by the MAC μP **128**. The filters **174**, **176** and **178** provide rejection of out of band signals for the selected signal bandwidth.

The filtered output is applied to a limiting amplifier, then to the I/Q baseband converter **312**. The limiter **182** produces a received signal strength indication that is proportional to log of the signal energy in the IF. This is applied to an A/D converter **126** then to the control μP **128**. This function is useful for detecting proximity to the transmitting unit, or to an interferor, and is also useful as an OOK detector.

The baseband converter **312** contains an internal divide-by-two circuit which produces a carrier at ½ the Auxiliary VCO frequency which is also at the nominal IF frequency. This is mixed with the limited IF signal to produce baseband I/Q waveforms. These in turn are applied to comparators that serve as hard decision circuits, then to the correlator **330** (see FIG. **17**) within the ASIC.

The frequency generation system **116** must be programmed to produce the Main VCO output. A serial interface within the control bus provides this capability. In the DS modes the Main VCO is programmed to the correct channel frequency and remains there until a mode change or the need to avoid interference is detected. For wideband DS operation, The Main VCO is programmed to the center of the frequency range.

For FH or hybrid operation, i.e., frequency hopping combined with direct sequence operation, the Main VCO is periodically reprogrammed to provide the hopping function. The MAC μP **128** maintains a timer, and table of channels representing the hop sequence. When the timer expires, the MAC μP initiates the hop to the next frequency in the sequence. Frames passed between the various devices within the WLAN establish shared timing references so that all units hop in synchronism.

The MAC μP **128** provides mode control, host interface, transmit frame generation, channel access control, receive frame processing, retries of erred packets, power management of radio circuitry, and frequency hopping control. The frequency hopping control is a superset of the remaining functions, allowing common programming of the remaining functions for both DS and FH.

The host interface for the PCMCIA version is compliant with the PCMCIA physical interface. The software interface is structured to comply with the factory industry standards NDIS and ODI formats.

Data to be transmitted is sent via a bus **131** to the MAC circuitry **128** from a host unit. The data to be transmitted is be modulated by the modulator **130** and frequency controlled by the spreader **124** according to the particular spread spectrum transmission mode to be utilized. The spreader **124** receives a chipping clock input that is at a frequency multiple of the source data frequency. The output of the spreader **124** is sent to the transmitter up converter and amplifier **314** to transmit the RF data signal through the antenna **112**.

The radio modules of the present invention may utilize several modes of spread spectrum RF data transmission. In one embodiment of the present invention, the various modes can be user selectable depending upon the particular application in which the radio modules are to be utilized. In another embodiment, the modes of operation are be automatically and dynamically selected, e.g., by the MAC μP **128** based upon criteria previously described. Such selection might also be performed by or with the assistance of the terminal unit or a digital signal processor provided for such task.

In a particular example, a microprocessor in the host terminal may retrieve stored modes of operation utilized on the previous day to which a higher logical multiplier is used to determine which transmission mode or modes are to be selected for that day's data transmissions. Additionally, data such as the average signal strength, most frequently utilized transmission mode, the average level of interference and noise for a particular mode or transmission success rate (e.g. percentages of transmissions) may be saved in nonvolatile memory and factored into the mode selection routine.

A description of particular spread spectrum modes follows in Table 1. The modulation techniques as described in Table 1 may be direct sequencing (DS), frequency hopping (FH) or on-off-keying (OOK) or a combination thereof. The rate at which data may be transmitted is given as kilobits per second (kb/s) and the channel bandwidth is given for each mode for the operational frequency range of 902 to 928 MHz. The full bandwidth of an embodiment of the radio is 26 Table 1.

TABLE 1

Spread Spectrum Transmission Modes

MODE	MODULATION TECHNIQUE	DATA RATE	BANDWIDTH
1	DS	250 kb/s	full band
2	CHANNELIZED DS	250 kb/s	5 channel 5 MHz
3	DS	500 kb/s	full band
4	FH	250 kb/s	80 channels 500 kHz
5	FH/DS	10 kb/s	80 channels 500 kHz
6	OOK	19.2 kb/s	80 channels 500 kHz
7	DS	10 kb/s	80 channels 500 kHz

The various spread spectrum modes are utilized to obtain optimum performance for particular modes of operation of the data terminal. The radio of the present invention preferably has a transmission range of up to 300 feet for closely spaced interior surfaces and up to 1300 feet in open spaces resulting in an operational coverage area from 280,000 to 5,300,000 square feet.

Utilization of the various transmissions modes results in variable immunity of the data signals from RF interference. The data terminal in which the radio is utilized thereby has the ability to extract the best system performance in every application regardless of multipath signal levels, interference levels and the sources thereof. The data terminal also thereby has the ability to dynamically trade data rate in return for coverage range (coverage range being a function of process gain) without the need to change radio hardware. Although not shown, capable of operating in the 2.4 GHz circuitry of FIG. **10** or other frequency ranges. Multiple intermediate frequency filter topology may be implemented to achieve interference rejection via varying filter selectivity.

MODES 1 and 3 are full band direct sequence and provide no inband interference protection other than high process gains of 18.7 dB and 15.7 dB respectively. Out-of-band protection from cellular transmissions operating in the vicinity is provided. MODE 1 provides good coverage area and rejection of multipath signal. MODE 3 provides shorter coverage are in return for a high speed data rate.

MODE 2 is a channelized direct sequence mode having a process gain of 17 dB. A single direct sequence cordless telephone operating in the vicinity will not degrade performance on at least four of the channels. MODE 2 provides a reasonable coverage area and jammer avoidance with channelization.

MODE 4 utilizes full band frequency hopping having a process gain of 17.1 dB. A single direct sequence cordless telephone will not degrade average throughput by more than 10 percent. MODE 4 provides moderate coverage area and high system capacity with dynamic jammer immunity with frequency hoping.

MODE 5 is a direct sequence mode which is frequency hopped having a process gain of 37 dB. A single direct sequence cordless telephone operating in the vicinity will not degrade average throughput by more than 10 percent. MODE 5 provides a long and high coverage area and dynamic jammer immunity with frequency hopping in return for a low data rate.

MODE 6 is an on-off-keying (OOK) modulation mode having a process gain of 0 dB. MODE 6 may be utilized as a low speed, low power link to a nearby scanner or printer for example.

MODE 6 the transceiver module is intended to communicate with peripheral devices containing simple AM transceivers. The Main VCO is set to the center frequency of the peripheral AM receiver. For OOK transmission, the data formatter is configured to produce a CW output signal. OOK signaling is providing by strobing the enable line on the transmitter, shown in FIG. **16**.

For OOK reception, the Main VCO is set to receive at the AM transmitter center frequency. The RSSI output from the limiting amplifier is used for AM detection. The signaling rate is limited by the speed at which the A/D can quantize the RSSI (preferably sampling several times per symbol), and at which the MAC μP **128** can process the sampled data to extract the modulation.

MODE 7 is a channelized direct sequence mode having a process gain of 20 dB. A single cordless telephone operating in the vicinity will not degrade performance on more than nine of the channels.

Other modes may also be included other than those listed above. Other possibly included modes may be variations or new combinations of the above modes or modes utilizing different modulation techniques and frequencies such as other standard RF transmission techniques which may be contemplated by the present invention. For example, an additional mode in an alternative embodiment may include voice communications transmissions utilizing standard audio modulation techniques achieved by switching channels or transmissions modes. Using voice communications the transceiver module may allow data terminal operators of a multi-level radio-frequency communications network to verbally communicate with one another or their supervisors throughout the entire network. Voice and data communications may be utilized with a single portable battery powered electronic device rather than having a data terminal for data communications and a separate mobile radio for voice communications, for example. Similarly, the process gains, sampling rates, etc., are exemplary value which may be modified as proves desirable.

FIG. **11** is a conceptual block diagram of the operation of the transmitter of FIG. **10** when operating in a direct sequence spread spectrum transmission mode. As illustrated, in the operation, data is received by the BASE BAND FORMATTER/SPREADER which, based upon the CONTROL SPREADER signal received from the MAC μP **128**, spreads the code based upon a particular code spreading sequence or pattern. The BASE BAND FORMATTER/SPREADER provides data on two output paths so that the data may be modulated according to the BPSK modulation scheme. The spread code is then processed by a programmable transversal filter **150** having two separate filters, **146** and **148**, one for each data path. Once filtered, the data is modulated by the components **136**, **138**, **140**, **320**, and **142** of the BPSK modulator. From the BPSK modulator, the data proceeds until it is transmitted.

FIG. **12** shows a conceptual diagram of the operation of the receiver utilized in conjunction with the transmitter of FIG. **11**. In the embodiment, data received by the antenna **112** passes through a zero-degree phase shift block **152**. From the block, one path goes directly to one input of a multiplier **158** while the second path passes through an RF DELAY block **154** and then passes to a second input of the multiplier **158**. DELAY CONTROL is supplied to the RF DELAY block **154** by the MAC μP **128** dependent upon the frequency of the received signal to cause a desired phase shift. From the multiplier **158** the signal passes through a baseband data filter **160** then through X^2 block **162** prior to its furthered processing.

FIG. **13** is a block diagram of the receiver **114** of the present invention. The receiver **114** may be located on the radio card CCA **44** of FIGS. **7**, **8** and **9**. Wideband filter **170** provides additional interference protection in the narrow band modes. A preselector filter **164** receives an RF data transmission signal from the antenna **112** (not shown). The preselector filter **164** may be a two pole bandpass filter (BPF) designed to have a wide bandwidth to keep the insertion loss low. In an exemplary embodiment filter **164** has a center frequency of 915 MHz, a bandwidth of 26 MHz and an insertion loss of 3.5 dB. However, the filter **164** could be controllable as well based upon desired filtering characteristics.

The output of the preselector filter **164** is fed into two low noise RF amplifiers (LNA) **166** and **168** each of which preferably has a gain of 10 and a noise figure of 2.2 dB. The gain of the RF amplifies **166** and **168** is sufficient to overcome any noise which may be present on the input RF data signal. The amplified signal may be sent to a bandpass filter (BPF) **170** for additional preselection filtering. Bandpass filter **170** is preferably designed to have four poles to provide high stop band rejection of possible signal images present in the data signal, having design values of 915 MHz center frequency, bandwidth of 26 MHz and an insertion loss

of 3.5 dB. Bandpass filter **170** could also be controlled to provide desired filtering characteristics.

The output of filter **170** is sent to the input of a mixer ("MIXER") **170** which mixes the data signal with the output **332** from the main voltage controlled oscillator of the frequency generator circuitry **116** of FIG. **10** which preferably has an output frequency of 844 MHz. The output of the mixer **172** is passed through an additional bandpass filter **174** having a center frequency of 71 MHz, a 26 MHz bandwidth and insertion loss of 2.0.

The data signal is passed through an intermediate frequency selectable bandwidth filter **322** comprising filters **174**, **176** and **178** for signal path **180**, which varies the filtering of the data signal according to the various modes of operation. Bandpass filter **176** is utilized for MODE 2 operation and has a bandwidth of 5 MHz and an insertion loss of 8 dB. MODES 1 and 3 utilize a direct signal path **180** with an overall bandwidth of 26 MHz from the output of filter **174**. MODES 4, 5, 6 and 7 utilize bandpass filter **178** which has a bandwidth of 500 kHz and an insertion loss of 8 dB. Multiple intermediate frequency filter topologies may be implemented to achieve interference rejection via varying filter selectivity.

The data signal is fed into an intermediate frequency amplifier (IF) **182** to overcome the losses from the filters. The IF amplifier **182** is a high gain amplifier having a gain and a noise factor of 7 dB. The output of the IF amplifier **182** drives the demodulator **181** which also receives the output from the auxiliary voltage controlled oscillator of the frequency generator circuitry **116** of FIG. **10** which may operate at a frequency of 142 MHz. The demodulator **184** may have data signal products I and Q which are fed into the inputs of the despreader circuitry **120** of FIG. **10**. The receiver **114** may have a noise figure of less than 7 dB, an image rejection figure of 60 dB and adjacent channel rejection of 40 dB.

FIGS. **14A** and **14B** are diagrams illustrating the operation of the pseudo-random number generator circuitry ("PN GENERATOR") **122** of the traverse filter **150** of FIG. **10**. The pseudo-random number generator circuitry **122** is preferably located on the radio interface card **58** of FIGS. **7**, **8** and **9**. The pseudo-random number generator **122** produces a pseudo-random binary output which is mixed with the data signal code in order to minimize the rate distortion for a given number of bits used to represent the data signal. The PN generator **122** may be comprising an 8-bit shift register ("8-BIT SHIFT REGISTER") **186** utilizing a feed back selector control ("FEEDBACK SELECT") **188** which provides programmable feedback. A restart control device ("RESTART CONTROL") **190** may be utilized to provide a programmable restart interval and a programmable restart vector. The PN generator **122** is preferably controlled by a control input ("CONTROL") from the MAC circuitry **128** of FIG. **10** and produces a PN code output signal ("PN CODE").

In the frequency hop (FH) mode, data is converted to an I/Q format for minimum shift keying (MSK) modulation. Narrowband modulation is preferably employed so the spreader function may disabled. The power spectral density of MSK modulation exhibits a main lobe bandwidth of approximately 1.5 times the symbol rate, but also contains substantial energy in the side lobes. This energy might create interference to other in-band or out of band systems and may also degrade operation if several frequency hopping sequences are used for increased throughput or multiple access. To reduce side lobe energy, transversal filtering is employed in the I/Q modulation paths. These consist of shift registers clocked at the symbol rate or a multiple thereof. The digital outputs from the shift registers are summed using a weighted resistor ladder (**350** and **352**) is external to the ASIC and constitutes the interface between digital and analog processing.

In the direct sequence (DS) modes, the data is mapped into I/Q symbols for either BPSK or QPSK modulation. The ASIC generates a synchronous chip clock at a multiple of the symbol rate that is applied to the pseudo-random number generator **122** to produce a chipping sequence at the selected spreading ratio. The exact chipping sequence is selected by programming the feedback select **188**. The chipping sequence is multiplied with the I/Q data symbols by use of exclusive OR gates (**324** and **326**). The selected data rate and spreading ratios determine the main lobe bandwidth of the transmitted signal. The bandwidths of the main lobe and side lobes are reduced by applying the transversal filters (**146** and **148**) with the shift registers operating at the chipping rate rather than the symbol rate. The main lobe bandwidth is preferably limited to approximately 1.6 times the chip clock frequency.

FIG. **15** is a block diagram illustrating the frequency generator circuitry **116** of FIG. **10**. The frequency generators **116** are preferably located on the radio card CCA **44** of FIGS. **7**, **8** and **9**. The radio interface card **58** of FIGS. **7**, **8** and **9** may provide data signals ("DATA", "CLOCK", "STROBE" and "LOCK DET") **190** and a clock signal ("CLOCK") **192** which is preferably a 30 MHz clock to the fractional number frequency agile synthesizer ("FRACTIONAL N SYNTHESIZER") **194**. The 30 MHz clock signal may be divided to produce frequencies of which 30 MHz is a multiple. The synthesizer **194** may also receive frequency input signals from a main voltage-control oscillator (MAIN VCO) **196** and from an auxiliary-voltage controlled oscillator (AUXILLARY VCO) **198**. The synthesizer **194** preferably switches between transmission and receiving modes in 200ns or less.

The main VCO **196** preferably operates at a nominal frequency of 844 MHz while the auxiliary VCO **198** preferably operates at a nominal frequency of 142 MHz. The synthesizer **194** has loop filter feedback paths **200** and **202** to oscillators **198** and **196** respectively for control of the frequency of the outputs of the oscillators **196** and **198**. The main VCO **196** supplies a signal to the down converter mixer **172** of the receiver **114** of FIG. **13** and provide a signal to the modulator **206** of the transmitter **118** of FIG. **11** after being fed through a divide by 2 circuit ("DIVIDE BY 2") **204**.

FIG. **16** is block diagram illustrating the functionality of the transmitter circuitry **118** of FIG. **10**. The transmitter **118** is located on the radio card CCA **44** of FIGS. **7**, **8** and **9**. The transmitter **118** receives data signal input products I and Q from the modulator and spreader circuitry **124** and **130** of FIG. **10**. The transmitter input data signal I and Q are mixed with the output of the auxiliary VCO **198** of FIG. **15** which are then combined and mixed with output of the main VCO **196** of FIG. **15** using an up converter mixer in the transmitter modulator **206**.

The output of the transmitter modulator **206** is preferably fed into a high pass filter (HPF) **208** having the data signal below the nominal carrier frequency of 900 MHz for single side band (SSB) transmission. The output of the high pass filter (HPF) **210** which preferably has a center frequency of 915 MHz and a band width of 26 MHz. The output of bandpass filter **219** is fed into two amplifier (AMP) **214** preferably having a gain of 20 and a second amplifier (AMP) **214** preferably having a gain 30 to provide the necessary

transmission output power. The power of the data signal at the output of amplifier **214** is nominally at least 1 watt which is fed through a lowpass filter (LPF) **216** and a bandpass filter (BPF) **218**. Because of the insertion losses of the filters **216** and **218** of 0.7 dB and 3.3 dB respectively, the transmitter **118** has a nominal output power of at least 250 mW which is transmitted via antenna **112** of FIG. **10**.

FIG. **17** illustrates the circuitry for selecting between the modes of modulation of the present invention. In frequency hopping mode the correlator ("CORRELATOR") **330** is bypassed and the decision and timing recovery block ("DECISION TIMING RECOVERY") **332** performs MSK detection. An alternative approach would be to use an FM discriminator, a function that is commonly available in limiting amplifier IC's. This is possible because MSK signal are known to be capable of demodulation as either FM or PSK signals.

In DS modes the correlator **330** preferably extracts the data symbols from the chipping sequence. The decision and timing recovery block **332** outputs send the recovered data ("DATA") and a clock signal ("CLOCK") to the MAC μP **128** for frame processing.

FIG. **18** is a block diagram of the MAC circuitry **128** of FIG. **10**. The MAC circuitry **128** is preferably located on the radio interface card **58** of FIGS. **7**, **8** and **9**. The medium access control circuitry **128** may be utilized in the protocol of communications media used in a particular communications network. The media access circuitry **128** may also utilize the 2.4 GHz MAC protocols to provide operation on both 9000 MHz and 2.4 GHz networks.

The media access protocol may be controlled by a MAC microprocessor ("MAC μP") **224** which receives a timing control signal from a crystal oscillator ("XTAL") **246**. The MAC microprocessor **224** may communicate with the electronic device in which the radio of the present invention is to be utilized via a host communications bus ("HOST"). The MAC microprocessor **224** may further have input and output signals **248** from an analog-to-digital converter ("A/D"), digital-to-analog converter ("D/A"), an electrically erasable read only memory (E^2ROM") or a reset control circuit ("RESET") for example. The MAC microprocessor **224** may utilize random access memory ("RAM") **250** which may be either volatile or nonvolatile memory. The MAC microprocessor **244** may also receive an input from OTP **252**. A control bus ("CONTROL") is utilized to control the circuitry of the radio card **44** of FIGS. **7**, **8** and **9**.

The MAC microprocessor **244** may have registers to read the status of and control the functions of the radio interface card **58**. Registers may also be provided to control the transmission power state of the radio of the present invention. The MAC microprocessor **244** may provide a parallel-to serial converter for control and programming of the synthesizer **194** of FIG. **15**. Additionally, the MAC microprocessor **224** may provide a programmable periodic timer, clock control of the CPU of the data terminal **10** and PCMCIA programmable clock generation.

FIG. **19** is a block diagram illustrating the host interface circuitry **132** of FIG. **10** for radio module **30** of FIG. **7** and for radio/scanner module **20** of FIG. **8**. The host interface circuitry **132** is preferably located on the radio interface card **58** of FIGS. **7** and **8**. A regulator ("REGULATOR") **254** functions as the power supply **134** of FIG. **10** and provides a regulated voltage signal to the radio interface card **58** which is connected to the MAC circuitry **128** via a host to MAC communications bus ("TO MAC") which connects to the electronic device in which the radio of the present invention is utilized through connectors ("CONNECTORS") **60** on the radio interface card **58** of FIGS. **7** and **8**. Further connection is made to a buzzer ("BUZZER") circuit **256** which may be the buzzer **64** of FIGS. **7** and **8**. A bus connection to the radio/scanner module **20** of FIG. **8** is provided for control of the scanner **258** which may be a laser scan engine ("LASER SCAN ENGINE").

FIG. **20** is a block diagram illustrating the host interface circuitry **132** of FIG. **10** for PCMCIA radio module **42** of FIG. **9**. The PCMCIA radio module host interface circuitry **132** is preferably located on the radio interface card **58** of FIG. **9**. A FET switched power supply ("POWER SUPPLY FET SWITCH") **260** functions as the power supply **134** of FIG. **10** and provides a supply voltage output ("TO RIC") to the radio interface card **58** of FIG. **9**. A microcontroller ("μC") **262** provides interfacing signals ("TO MAC and PCMCIA CONNECTOR") between the MAC circuitry **128** of FIG. **20** and the electronic device in which the radio of the present invention is to be utilized through PCMCIA connectors **102** of FIG. **9**.

FIG. **21** is a diagram illustrating an alternate configuration of portable data terminals according to the present invention. Specifically, a communication network **1450** provides an overall network environment for portable data collection terminals **1454**. A host computer **1451** is connected to access points **1452** via a wired connection **1453**. The access points **1452** are in turn communicatively coupled to portable data collection terminals **1454** via wireless links **1455**. The wireless links **1455** may be one or more of a plurality of wireless communications technologies, including narrowband radio frequency, spread spectrum radio frequency, infrared, and others.

A dock **1456** and a portable data terminal **1458** according to the present invention may be connected to the wired backbone **1453**, and may serve a function similar to an access point **1452**. The dock **1456** may provide power to the terminal **1458**, or alternatively the dock may be absent and the terminal **1458** may run for a limited time under the power of its battery. The terminal **1458** connects directly to the wired backbone **1453**, and also communicates with another terminal **1454** through a wireless link **1455**. The terminal **1458** may, for example, be equipped with protocol converter circuitry to convert communication on the wire backbone **1453** into wireless communication on the link **1455**, and also to convert wireless communication on the link **1455** to a format for communication on the wire backbone **1453**. The communication module associated with terminal **1458** thus improves the versatility of the terminal **1458**.

FIG. **22A** illustrates one embodiment of the data collection terminal of the present invention, having both wired and wireless communication capability. A data terminal **1500** is shown having a communication module **1502** and a base module **1504**. The communication module **1502** contains a wired transceiver **1506**, a wireless transceiver **1508**, and processing and interface circuitry **1510**. The base module **1504** contains a control processor and interface **1512**, an application processor **1514**, and terminal circuitry **1516** containing data input and display portions and other circuitry well known in the art. The blocks shown in communication module **1502** and base module **1504** are simplified for exemplary purposes, and it will be understood by one skilled in the art that a data terminal **1500** according to the present invention is not limited to the block circuitry shown in FIG. **22A**. In another embodiment, the communication module **1502** may contain additional transceivers for communicating on other mediums and in other networks. The processing and interface circuitry **1510** of the communica-

tion module **1502** isolates the circuitry of the base module **1504** from the differing operating characteristics of the transceivers, so that communication by any of the transceivers can be accommodated by the circuitry and software routines of the base module **1504**.

In operation, the processing and interface circuitry **1510** of the communication module **1502** is programmed with the network configuration to route communication through either the wired transceiver **1506** or the wireless transceiver **1508**. An incoming message on the wired transceiver **1506** may be routed and processed to a terminal display portion, or may be routed to a host computer, a dock, or another portable data terminal **1500** through the wired transceiver **1506** or through the wireless transceiver **1508**, whichever is appropriate. Similarly, an incoming message on the wireless transceiver **1508** may be routed to display or through the wireless transceiver **1508** or through the wired transceiver **1506**, whichever is appropriate for the destination. By provided for the routing functions to be done in the communication module **1502**, the power used in the base module **1504** can be minimized. Specifically, the interface with the control processor **1512** and the application processor **1514** need not be used, which allows the main terminal in the base module **1504** to remain dormant while communications are routed in the communication module **1502**.

The choice of which transceiver to use in routing communication is based on a "least cost" analysis, considering factors such as the power required to send the message through a particular transceiver, the speed at which the message will be received from a particular transceiver, the possibility of error associated with each transceiver, etc. A wired connection is usually selected when available, but routing decisions may vary with the different characteristics of each message and the mobility of the terminal. The processing and interface circuitry **1510** in the communication module **1502** is preferably capable of performing the least cost routing analysis for all communication messages without activating any processing power from the base module **1504**.

FIG. **22B** is a diagram illustrating a specific implementation of the portable terminal of FIG. **22A**. A single PCMCIA card contains not only a multi-mode wireless transceiver, but also a wired modem transceiver. In particular, a portable terminal **1520** contains terminal circuitry **1522** comprising processing circuitry **1526**, conventional terminal circuitry **1528** and interface circuitry **1530**. The interface circuitry **1530** provides a PCMCIA interface for receiving PCMCIA cards of various functionality. The terminal circuitry **1522** is well known and can be found in conventional portable or hand held computing devices.

Via the interface circuitry **1530**, the portable terminal **1520** accepts PCMCIA cards. As illustrated, the PCMCIA card inserted constitutes a communication module **1524** which provides both wired and wireless access. Specifically, the communication module **1524** comprises processing circuitry **1532**, a multi-mode wireless transceiver **1534** (such as set forth previously), a wired modem transceiver **1536** and interface circuitry **1544**. When in use, the wired modem transceiver **1536** interfaces via a jack **1540** to a telephone line (not shown). Similarly, the wireless multi-mode transceiver **1534** communicates via an antenna **1538**.

Whether the modem transceiver **1536** or multi-mode transceiver **1534** is being used, the processing circuitry **1526** always delivers and receives data and messages via the interface circuitry **1530** in the same manner and format, i.e., the interface circuitry **1530** supports a common communication interface and protocol. The processing circuitry **1532** of the communication module **1524** receives data and messages via the interface circuitry **1544**. If the modem transceiver **1536** is being used, the processing circuitry **1532** appropriately (de)segments and (de)compresses the data/messages utilizing a digital signal processor (DSP) **1542**. Otherwise, the processing circuitry **1532**, including the DSP **1542**, participate to assist in wireless communication via the multi-mode transceiver **1534**. Thus, the module **1524** not only saves on PCMCIA slots (as required when a conventional radio card and a conventional modem card are both being used), but also saves costs and increases reliability by sharing common circuitry resources. In particular, the modem and multi-mode transceivers **1536** and **1534** share the interface circuitry **1544** and processing circuitry **1532** which includes the DSP **1542**.

FIG. **23** is a diagram illustrating the use of portable terminals according to the present invention utilizing both wired and wireless communication in a network configuration. Specifically, a server **1515** is shown connected to mobile computing devices (MCDs) **1554** via a wired communication link **1552**. The communication link **1552** may alternatively be an infrared link, or another communication technology. MCDs **1554** are connected to each other and to the server via the link **1552**. MCDs **1554** are also communicatively coupled to each other via wireless links **1556**.

The network involving the server **1550**, the communication link **1552**, and the MCDs **1554** represents a primary communication network, that is preferable to use when there are no interference or disconnection problems in the network. The network between MCDs **1554** involving wireless links **1556** represents an auxiliary or backup network, which is used where there are problems with the primary network, or to run diagnostics on the primary network. The MCDs **1554** are equipped to automatically switch from the primary network to the auxiliary network when a problem arises on the primary network. This network redundancy allows the MCDs **1554** to remain in constant communication with each other and with server **1550**.

For example, a wired network on a communication link **1552** does not recognize connection well, and may not immediately detect a loss of connectivity. MCDs **1554** utilize wireless links **1556** to diagnose a lack of connection on the wired network **1552**. For example, an MCD **1554** may activate its radio to send a test message to another component of the network, either another MCD **1554** or the server **1550**, to test communication on the wired link **1552** by sending a reply test message back to the inquiring MCD **1554**. The test routine is preferably implemented and controlled by the processing/interface circuitry **1510** in the communication module **1502** (see FIG. **49**) of the MCD **1554**. If the reply communication test is not received, the MCD **1554** will know that there is a problem on the primary network, and will inform other MCDs **1554** to switch to the auxiliary network. The MCDs **1554** can continue to check the primary network via wireless links **1556** until the primary network is back in service.

Some MCDs **1554** may be out of range to effect wireless communication with server **1550** by a wireless link **1556**. An out-of-range condition is determined according to the particular communication and connection protocol implemented by MCDs **1554** and other network components such as server **1550**. In this situation, the out-of-range MCD **1554** sends its message, along with an out-of-range condition indicator, to another MCD **1554** that is in communication with the server **1550**, and the in-range MCD **1554** forwards the message on to the server. Similarly, the server **1550** sends its messages intended for the out-of-range MCD **1554**

to an in-range MCD **1554** to be forwarded over a wireless link **1556**. The MCDs **1554** are capable of automatically switching from the wired network to the wireless network and vice versa for each communication attempt.

FIG. **24** is a diagram illustrating the use of portable data terminals according to the present invention utilizing both wired and wireless communication to access separate subnetworks in an overall communication network. Specifically, a wired network includes wired server **1600** and mobile computing devices (MCDs) **1606** connected by a wired communication link **1604**. MCDs **1606** are also part of a wireless network with wireless server **1602**, and are communicatively coupled to each other and the wireless server **1602** via wireless communication links **1608**. Wireless links **1608** may be radio frequency communication links, such as narrowband, direct sequence spread spectrum, frequency hopping spread spectrum or other radio technologies. Alternatively, wireless links **1608** may be infrared communication links, or other wireless technologies. In another embodiment, the wired server **1600** and the wired communication links **1604** may utilize infrared communication technology, with the wireless communication links **1608** being radio frequency links. The present invention contemplates various combinations of communication technologies, all accommodated by communication modules of MCDs **1606**. The communication modules of MCDs **1606** include any number of transceivers operable on any number of communication mediums, since the differences in their operating characteristics are isolated from the base module of the MCDs **1606** by a communication processor. The MCDs **1606** are preferably able to automatically switch between the wired and wireless networks, controlled primarily by a communication processor in their communication modules.

Some MCDs **1606** may be out of range to effect wireless communication with wireless server **1602** by a wireless link **1608**. An out-of-range condition is determined according to the particular communication and connection protocol implemented by MCDs **1606** and other network components such as wireless server **1602**. In this situation, the out-of-range MCD **1606** sends its message, along with an out-of-range condition indicator, to another MCD **1606** that is in communication with the wireless server **1602**, either over a wireless link **1608** or alternatively over a wired link **1604** if both MCDs **1606** are constituents of a wired network. The in-range MCD **1606** then forwards the message on to the wireless server **1602** over wireless link **1608**. Similarly, the wireless server **1602** sends its messages intended for the out-of-range MCD **1606** to an in-range MCD **1606** to be forwarded over a wireless link **1608** or a wired link **1604**, if both MCDs are constituents of a wired network.

FIG. **25***a* is a block diagram illustrating an embodiment of the present invention wherein a wireless access device uses a dedicated control/busy channel to manage a plurality of modes of communication with roaming terminals. Specifically, a wireless access device **1701** manages communication in a cell of network with a plurality of wireless terminals, such as a wireless terminal **1703**. The network may contain a plurality of other cells each managed by an associated wireless access device to provide site or premises wide ubiquitous wireless coverage for the plurality of stationary and roaming wireless terminals. As illustrated, for example, the network may also contain wired communication links therein as provided, for example, by a wired Ethernet backbone LAN **1705**.

The wireless access device **1701** comprises control circuitry **1711**, a multimode transceiver **1713**, an Ethernet transceiver **1715** and an antenna **1717**. The Ethernet transceiver **1715** supports communication between the backbone LAN **1705** and the control circuitry **1711**. Similarly, the multimode transceiver **1713** supports communication into a wireless network cell to wireless devices within range such as the wireless terminal **1703** via the antenna **1717**. The multimode transceiver **1713** is more fully described below in reference, for example, to FIG. **1C**.

A wireless terminal **1703** also comprises a multimode transceiver, a multimode transceiver **1721**, as well as an associated antenna **1723** and conventional terminal circuitry **1725**. Using the multimode transceiver **1721** and associated antenna **1723**, the wireless terminal **1703** communicates with the wireless access device **1701** when it is within transmission/reception range.

The wireless access device **1701** selects (and may periodically reselect) one of a plurality of communication modes and associated parameters of operation based on a variety of factors mentioned previously such as recent success rate, RSSI, neighboring cell operation, etc. However, when the wireless terminal **1703** roams within range of the wireless access device **1701**, the roaming terminal must identify the currently selected mode and associated parameters being used by the wireless access device **1701** to maintain the cell's communication. Although the wireless terminal **1703** could be configured to scan each available mode to identify the currently selected mode and parameters, such efforts often prove time consuming.

Instead, the wireless terminal **1703** and wireless access device **1701** are preconfigured with mode and parameter information that defines a default, busy/control channel. Thus, upon roaming into range of the wireless access device **1701**, the wireless terminal **1703** first switches to the busy/control channel by operating the multimode transceiver **1721** according to the preconfigured mode and parameters, and then begins listening. Within a predefined maximum time period thereafter, the wireless terminal **1703** will receive transmissions from the wireless access device **1701** identifying the currently selected communication channel mode and associated parameters. The wireless access device **1701** periodically broadcasts such information on the busy/control channel to capture terminal that happens to need communication channel definitions (e.g., selected mode and parameters) to participate. The wireless terminal **1703** utilizes identified mode and associated parameter information to switch the multimode transceiver **1721** over to the selected communication channel and begins participation thereon.

FIG. **25***b* is a drawing illustrating advantageous operation of the wireless access device of FIG. **25***a* when configured to handle hidden terminal conditions. In particular, each of wireless terminals **1751** and **1753** is configured to only switch from the busy/control channel (having predefined mode and associated parameters) to the communication channel (selected by a wireless access device **1755**) when there is a need for access to the communication channel and the communication channel is clear (available). In this configuration, when no desire to communicate is present, the terminals **1751** and **1753** need only occasionally check the busy/control channel to identify any outstanding messages or communication requests as transmitted by the wireless access device **1755**. If either terminal **1751** or **1753** desires to participate on the communication channel (to initiate communication or to respond to awaiting messages or communication requests), that terminal need only monitor the busy/control channel long enough to identify a clear communication channel before switching over to the com-

munication channel to participate. As before, the wireless access device 1755 also periodically identifies the communication channel mode and associated parameters as selected and reselected by the wireless access device 1755.

To fully appreciate this process, first assume that the wireless terminals 1751 and 1753 are not within range of the wireless access device 1755. Upon wandering within range of the wireless access device 1755, the wireless terminal 1751 utilizing the predefined mode and parameters begins listening for transmissions on a busy/control channel. Within some time period thereafter, the wireless access device 1755 participates on the busy/control channel to transmit: 1) the currently selected communication channel definition (i.e., mode and parameters); 2) pending message and communication request indicators; and 3) current channel conditions. After identifying a need to participate, the wireless terminal 1751 awaits a transmission from wireless access device 1755 (on the busy/control channel) that the selected communication channel is clear (not in use). When the channel is clear, the wireless terminal 1751 adopts the selected communication channel definition and begins participating thereon.

Second, assume that, while the wireless terminal 1751 is engaged in ongoing communication with a computing device 1761 on a backbone LAN 1763 via the wireless access device 1755, the wireless terminal 1753 comes within range of the wireless access device 1755 and desires to participate on the currently selected communication channel. The wireless terminal 1753 adapts itself to participates on the busy/control channel and identifies, in periodic transmissions from the wireless access device 1755, that the communication channel is busy. Thus, the wireless terminal 1753 must monitor the busy/control channel to identify when the communication channel is clear before adapting to the communication channel to participate.

This operation works whether or not the terminals 1751 and 1753 are within range of each other. In particular, the terminal 1751, terminal 1753 and access device 1755 have transmission ranges illustrated by dashed circles 1771, 1773 and 1755, respectively. Although both terminals 1751 and 1753 are within range of the access device 1755, neither are in range of each other and, thus, are referred to as "hidden" from each other. The access device 1755 is within range of both of the terminals 1751 and 1753. If the wireless terminal 1753 attempted to transmit on the communication channel while the terminal 1751 was transmitting, a collision would occur at the wireless access device 1755. However, this is not the case because both of the terminals 1751 and 1753 must receive a communication channel clear indication on the busy/control channel from the wireless access device 1755 that is in range of both, avoiding the hidden terminal problem. When participation is completed on the communication channel, the terminals 1751 and 1753 readopt the busy/control channel definition (i.e., mode and associated parameters).

Participation by the wireless access device 1755 on the busy/control channel need only be by transmitting, although receiving might also be employed in case the busy/control channel is to be shared. Similarly, participation by the wireless terminals 1751 and 1753 need only be by receiving transmissions, although transmitting might also be employed. In particular, transmission might be employed by a wireless terminal on the busy/control channel if the wireless terminal does not support the currently selected communication channel, i.e., does not support the mode and associated parameters.

In addition, should the two terminals 1751 and 1753 be within range of each other and desire to intercommunicate, the wireless access device 1755 will allocate an unused, non-competing mode in which the two terminals can exchange information or data. In particular, one of the wireless terminals 1751 and 1753 first attempts to establish an exchange by gaining access to the communication channel (via busy/control channel monitoring). Once access has been established, the wireless terminal, e.g., the terminal 1751 delivers a request for poll message (RFP) to the wireless access device 1755 which identifies the amount of data or information to be exchanged if known, the recipient or target (e.g., the terminal 1753), and characteristics of the data or information such as whether real time dedicated bandwidth is not needed, desired or required. If the amount of data or information to be exchanged is minimal and requires no dedicated bandwidth, the wireless access device 1755 will not bother attempting to dedicate a mode to the transceivers 1751 and 1753. Instead, the wireless access device 1755 will merely relay the information or data received from the terminal 1751 to the terminal 1753 and vice versa. Otherwise, the wireless access device 1755 will examine its lookup table to see if the terminal 1753 currently participates within the network cell (i.e., within range) of the wireless access device 1755. If the terminal 1753 doesn't participate, the wireless access device 1755 will inform the terminal 1751 and only proceed with relaying functionality (or spanning tree wireless routing, for example) per confirmation by the terminal 1751. However, if the terminal 1753 does participate, the wireless access device 1755 concludes that there is a good chance that the terminals 1751 and 1753 are within range of each other. Thus, the wireless access device 1755 attempts to identify an available and appropriate mode and associated parameters that may be temporarily assigned to the terminals 1751 and 1753 for their communication exchange. The wireless access device 1755 attempts to communicate such channel information to both of the terminals 1751 and 1753. Thereafter, as soon as either of the terminals 1751 and 1753 receive the information, the terminal will immediately set their multimode radio to the dedicated mode and parameters, listen for polling messages from the other terminal, and, if no poll messages are detected, begin transmitting polling messages to the other terminal. If a polling message is received, the communication exchange, such as dedicated voice bandwidth, will take place. Afterwards, the terminals 1751 and 1753 inform the wireless access device 1755 that the allocated channel is no longer needed and may be reallocated. Similarly, if a terminal polls for the other for a predefined period of time on the allocated channel without receiving any response, that terminal will inform the wireless access device 1755 of the failure, and the wireless access device will free the allocated mode for reallocation or communication channel use.

FIG. 25c is a flow diagram illustrating the functionality of one embodiment of the wireless access device of FIG. 25b in managing a communication channel using a second channel, i.e., the busy/control channel. The wireless access device maintains ongoing communication or otherwise waits in an idle state at a block 1781. If a predetermined time out period (e.g., a B/C service time period) lapses while the access device is in an idle state as indicated at a block 1782, the access device switches to the predefined mode and associated parameters of the busy/control channel at a block 1783. At a block 1784, on the busy/control channel, the access device transmits: 1) the currently selected communication channel definition (mode and parameters); 2) channel status indications; and 3) pending message/communication request indications. Thereafter, at a block 1785, the access device switches back to the selected com-

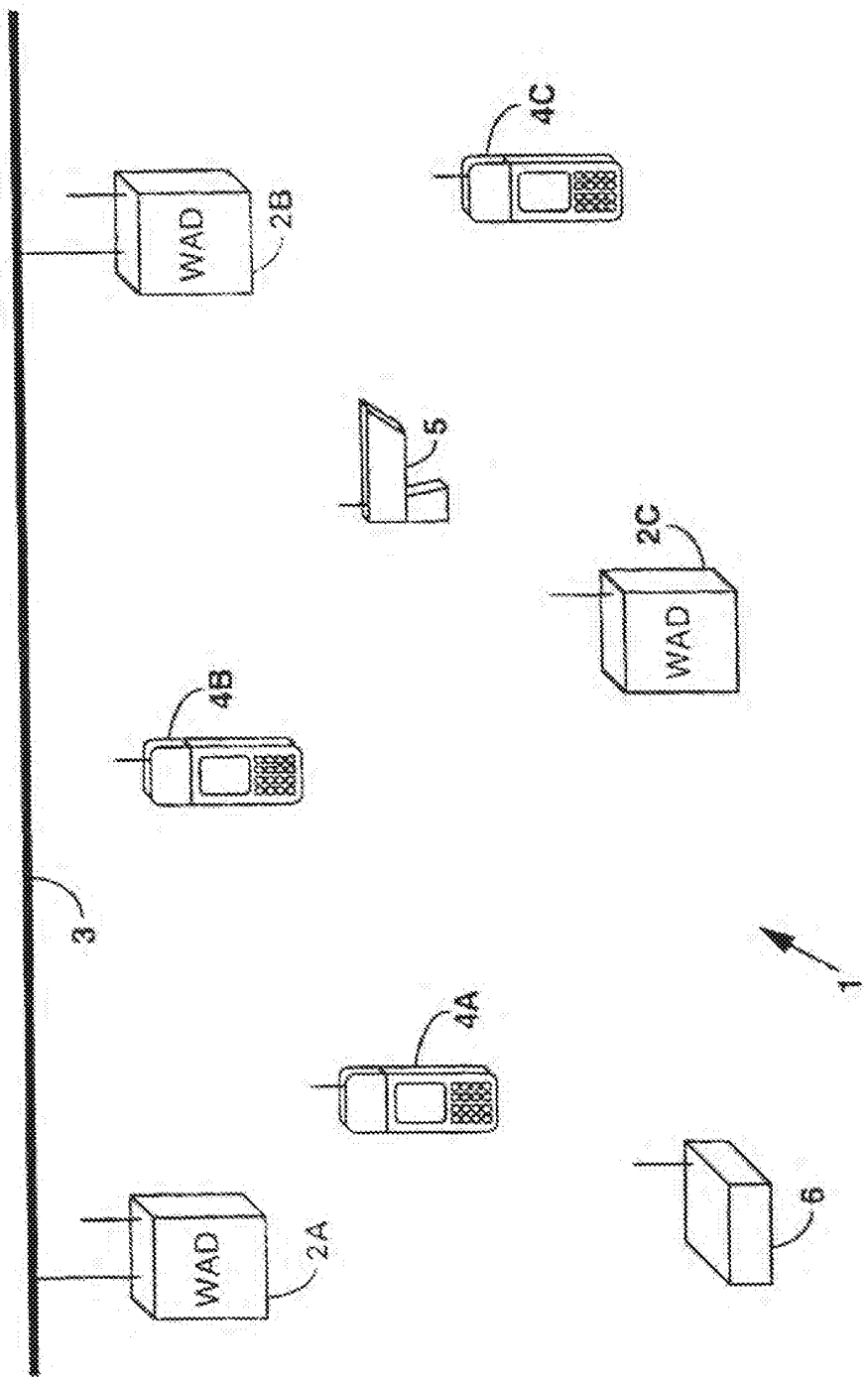

FIG. 1A

munication channel mode and parameters, resets the B/C service time period (at a block **1786**) and returns to the block **1781** to participate on the communication channel.

If, while participating on the selected communication channel at the block **1781**, a request for poll (RFP) transmission is received from a wireless terminal as indicated at an event block **1787**, the wireless access device responds by switching to the busy/control channel at a block **1788** to deliver communication channel definition, channel "busy" indications and any pending message/communication request indications at a block **1789**. Although the busy indication may only indicate that the selected communication channel is not available, it also indicates an estimated amount of time during which the channel will be busy. The wireless access device derives this estimate from the overall data size to be transferred as determined from the data itself or from a field in the RFP transmission, if known. This way, a waiting wireless transceiver may go to sleep while an ongoing exchange is taking place and wake up when the exchange is scheduled to have finished.

Thereafter, at a block **1790**, the wireless access device switches back to the selected communication channel mode and parameters, resets the B/C service time period (at a block **1791**), transmits a Poll or Data message (whichever is appropriate under the circumstances) on the communication channel at a block **1792**, and returns to the block **1781** to await a Data or Ack (acknowledge) message from a participating wireless transceiver. In particular, in response to an RFP from a participating wireless device that has Data to deliver via the wireless access device, the wireless access device delivers a Poll message at the block **1792** to the participant, prompting for the Data. Otherwise, if the RFP indicates a desire by the participating wireless terminal to receive Data, the wireless access device sends the Data at the block **1792**. The Data sent at the block **1792** may be of any length including dedicated bandwidth for an unknown duration. Thus, if a wireless terminal listens for a period of time greater than the B/C service time period and detects no transmission from the access device on the busy/control channel, the wireless terminal concludes that the selected communication channel is busy.

Alternately, data may be segmented into Data packets for transmission one packet at a time via the blocks **1781** and **1787–92**. In this way, a listening wireless terminal will can be sure that it will receive a communication channel broadcast via the blocks **1782–86** between each Data packet transmission. Upon receipt, wireless terminals may place their transceivers in a sleep mode until each of the Data packets of the data have been exchanged, and the communication channel is clear.

Upon receiving the data (or Data packet) or an acknowledge (ACK) message indicating successful receipt of data (or a Data packet) as indicated at an event block **1793**, the wireless access device broadcasts a Poll, Ack or Clear message or sends data (or packets thereof) as proves appropriate at a block **1798**. The access device then switches to the busy/channel at a block **1794** to transmit the currently selected communication channel definition, busy or clear indications and pending messages/requests at a block **1794**. Afterwards, the wireless access device switches back to the communication channel at a block **1796**, resets the B/C service time period at a block **1797** and returns to the block **1781** to continue communication exchanges or enter an idle state if the exchange is complete.

FIG. **26***a* is a block diagram illustrating an alternate embodiment of that shown in FIG. **25***a* wherein a wireless access device uses a separate transmitter for the dedicated control/busy channel and a roaming terminal uses either a shared multimode transmitter or a multimode transmitter and a separate busy/control channel receiver. In the previous embodiments of FIGS. **25***a–c*, the wireless access device and wireless transceivers each used a multimode transceiver to support participation on two wireless channels: the selected communication channel and the busy/control channel. As illustrated, this need not be the case. Instead, a wireless access device **1801** participates using two radios when communicating with a wireless transceiver **1803** (having only a single multimode radio) and a wireless transceiver **1805** (having two radios). With a dual radio configuration, participation on both channels may occur at the same time, increasing overall performance in many circumstances.

In particular, a wireless access device **1801** comprises control circuitry **1811**, an Ethernet transceiver **1813**, a busy/control transmitter **1815** and corresponding antenna **1817**, and a multimode transceiver **1819** and corresponding antenna **1821**. Having separate radio units and antennas, the wireless access device **1801** participates on: 1) a selected communication channel defined by mode and parameter information, servicing data exchanges in the communication network cell; and 2) the busy/control channel defined by predetermined mode and parameter information known to all wireless transmitters, controlling access to the selected communication channel. Such participation is often simultaneous, preventing a wireless terminal from having to wait long on the busy/control channel for a transmission.

In one configuration, where hidden terminals prove to be of little concern, the wireless terminals **1803** and **1805** are only forced to wait on the busy/control channel until they receive the selected communication channel definition. In another configuration, as better exemplified in FIG. **26***b* which follows, all wireless terminals participate on the busy/control channel except when they have a need and gain access to the selected communication channel. In this latter configuration, when the wireless access device **1801** is participating on the selected communication channel with the wireless terminal **1805**, for example, the wireless access device **1801** concurrently delivers communication channel definition, busy/clear status and message/request indications on the busy/control channel. Such information can be repeatedly transmitted at any time interval desired or may be transmitted continuously.

Similarly, although a wireless transceiver may operate with a single multimode radio as described previously, it may also take advantage of multiple radios. Specifically, the wireless transceiver **1803** comprises terminal circuitry **1831** and only one radio, a multimode transceiver **1833**. Thus, the wireless transceiver **1803** is forced to time share participation on the busy/control channel and the selected communication channel—often all that is needed. However, the wireless terminal **1805** comprises terminal circuitry **1845** and two radios, a busy/control channel receiver **1847** and a multimode transceiver **1849**. As such, the wireless terminal **1805** may place the multimode transceiver **1849** in a low power state, and only powering up its busy/control channel receiver **1847** to check in. Characteristics of the busy/control channel may be chosen to permit significant overall power savings and simplicity in the design of the receiver **1847**.

FIG. **26***b* is a drawing illustrating advantageous operation of the wireless access device of FIG. **26***a* when configured to overcome the hidden terminal conditions. As with FIG. **25***b*, the range of a wireless access device **1911** is defined by a dashed circle **1913**. Similarly, the wireless terminals **1915** and **1919** have ranges defined by dashed circles **1917** and

1921, respectively. The wireless terminals 1915 and 1919 are out of range of each other. The wireless access device 1911 is within range of each of the wireless terminals 1915 and 1919.

Unlike the wireless access device 1755 (of FIG. 25b), the wireless access device 1911 participates on both a busy/control channel and a selected communication channel simultaneously. The wireless access device 1911 delivers all communication channel information either continuously or periodically on the busy/control channel, while idle or servicing any wireless terminal on the communication channel. By doing so, the wireless access device 1911 is free to set any length data segments or none at all on a selected communication channel, while delivering communication channel information as often as desired on the busy/control channel. Thus, the busy/control channel and communication channel can be designed for optimized performance without having to consider time sharing of a single channel or time sharing a transceiver.

Thus, the busy/control channel can be designed to minimize the listening time of the wireless terminals 1915 and 1919 to gain status information. Sleep periods of the wireless (and often hand-held and portable) terminals 1915 and 1919 increased saving critical battery power. Similarly, data segmentation can be set based solely on the conditions of the selected communication channel, and not merely to guarantee the wireless access device 1911 a maximum interleaving time period during which the wireless access device 1911 will participate on the busy/control channel.

FIG. 26c is a flow diagram illustrating the functionality of one embodiment of the wireless access device of FIG. 26b in managing a communication channel using a control/busy channel with dual radios. Specifically, a wireless access device waits in an idle state or is engaged in ongoing communication on the selected communication channel at a block 1951. As soon as a B/C time period lapses as indicated by an event block 1953, the wireless access device branches to a block 1955 to transmit mode, parameter and status information regarding the currently selected communication channel along with indicators of pending messages and communication requests. Afterwards, the wireless access device resets the B/C time period at a block 1957 and branches back to the block 1951 to continue servicing the selected communication channel or reenter an idle state. Thus, a preset (B/C time period) intervals, the wireless access device delivers the selected communication channel information on the busy/control channel. The B/C time period may be configured to either minimize transmission overhead or minimize wireless terminal listening times. The B/C time period might also be set to zero, causing the wireless access device to continuously transmit the selected control channel information (i.e., the selected mode and parameters, busy or clear status, predicted duration of a current exchange, and pending messages and communication requests). The B/C period is thus a synchronous period. Thus, a maximum value of the B/C period (or an other commonly known value) provides a wireless terminal with a guaranteed maximum listening time.

Although the B/C time interval may prove sufficient to communicate updates to the selected communication channel information, the wireless access device is also configured to immediately identify any mode or parameter changes of the selected communication channel. In particular, at a block 1961, if for any of a variety of reasons the wireless access device decides to switch the mode and/or parameters of the communication channel, the wireless access device vectors to immediately deliver such information on the busy/control channel via the blocks 1955 and 1957. Similarly, the wireless access device may also be configured (as indicated by the dashed lines) to respond to immediately report status changes such as whether a message or a request for dedicated bandwidth has been received as indicated at a block 1963 and the blocks 1955 and 1957. Other immediate event servicing may also be added and similarly serviced.

Unlike the single radio (shared) embodiments previously mentioned, the wireless access device services the block 1955 and 1957 no matter what the wireless access device is currently engaged in on the selected communication channel.

FIG. 27 is a block diagram illustrating further embodiments of the present invention wherein channel selection and operating parameters are delivered by a wireless access device on a dedicated busy/control channel with or without multimode transceiver capabilities. In particular, supporting a plurality of wireless terminals such as a terminal 2013, a wireless access device 2011 maintains two channels: a communication channel and a busy/control channel as previously described. To carry out such functionality, the wireless access device 2011 may comprise control circuitry 2021, an Ethernet transceiver 2023 and either a single, configurable transceiver 2025 (for operating on both the communication and busy/control channels) or a single transceiver 2025 (for the communication channel which may have only limited if any configuration capability) and a single transmitter 2027 (for operating on the control channel).

With the single, configurable transceiver 2025, the wireless access device may operate identically to that described in reference to FIGS. 25A–C. However, the configurable transceiver 2025 may not provide multimode operation, but only support multiple channels operating in a single mode. For example, the transceiver 2025 may only support the mode of channelized direct sequence. Although only a single mode is available, the parameters such as (and defining) spreading codes, spreading code lengths, channel center frequency and channel bandwidth, for example, alone, and without mode change, provide the wireless access device 2011 with the ability to support a dedicated busy/control channel and provide a plurality of other channels for maintaining the communication channel.

Alternatively, the wireless access device 2011 may also comprise a dedicated busy/control transmitter 2027. If it does, the wireless access device 2011 with a multimode transceiver 2025 would operate as detailed in reference to FIGS. 26A–C. If configured with a single mode transceiver 2025 supporting only one channel, the wireless access device 2011 would still maintain the communication and busy/control channels buy need only identify parameter and pending messages and communication requests on the busy/control channel. Of course the busy/control channel would still solve the hidden terminal problems and provide the associated benefits described above. Finally, with the transmitter 2027 supporting the busy/control channel, the transceiver 2025 might support multiple communication channels without supporting multiple modes of operation. In such configurations, the wireless access device 2011 need not report mode change information on the busy/control channel. Reporting all other information and aforementioned control would still take place.

The wireless transmitter 2013 could accommodate the same wireless configuration as described in reference to the wireless access device 2011. Along with conventional terminal circuitry 2029, it may have a multimode or non-multimode, configurable or non-configurable transceiver

2031. The transceiver 2031 might operate independently or utilize a supporting busy/control receiver 2033. Lastly, although not necessary, the transmitter 2027 and receiver 2033 might each constitute transceivers.

As is evident from the description that is provided above, the implementation of the present invention can vary greatly depending upon the desired goal of the user. However, the scope of the present invention is intended to cover all variations and substitutions which are and which may become apparent from the illustrative embodiment of the present invention that is provided above, and the scope of the invention should be extended to the claimed invention and its equivalents. It is to be understood that many variations and modifications may be effected without departing from the scope of the present disclosure.

I claim:

1. A communication network for collecting and communicating data comprising:

a wireless access device comprising a control circuit and a first RF transceiver that selectively operates in one of a plurality of different spread spectrum modulation modes;

at least one mobile terminal comprising a second RF transceiver that operates in at least one of a plurality of different spread spectrum modulation modes; and

the control circuit being responsive to transmissions received from the first RF transceiver for evaluating communication performance and dynamically selecting one of the plurality of spread spectrum modulation modes of the first RF transceiver while taking into consideration the at least one of the plurality of spread spectrum modulation modes of the second RF transceiver.

2. The communication network of claim 1 wherein the plurality of different spread spectrum modulation modes of the first RF transceiver comprise a direct sequence transmission mode and a frequency hopping mode.

3. The communication network of claim 1 wherein the plurality of different spread spectrum modulation modes of the first RF transceiver comprise a direct sequence transmission mode and a channelized direct sequence mode.

4. The communication network of claim 1 wherein the plurality of different spread spectrum modulation modes of the first RF transceiver comprise a frequency hopping mode and a hybrid frequency hopping mode.

5. The communication network of claim 1 wherein said first RF transceiver operates to support a communication channel and a second channel on a time shared basis.

6. In a communication network, a plurality of wireless access devices capable of communicating with a plurality of wireless terminals, each of the plurality of wireless access devices comprising:

a first radio controllable to support a communication channel operating pursuant to one of a plurality of modes;

a second radio supporting a second channel independent of the communication channel;

a controller that selects one of the plurality of modes and controls the first radio to support the selection; and

the controller utilizes the second radio to communicate on the second channel to manage the communication channel.

7. The communication network of claim 6, wherein the plurality of modes includes a plurality of spread spectrum modes.

8. The communication network of claim 7, wherein the first radio comprises a multimode transceiver and the second radio comprises a transmitter.

9. In a communication network, a plurality of wireless access devices capable of communicating with a plurality of wireless terminals, each of the plurality of wireless access devices comprising:

a transceiver controllable to operate pursuant to any of a plurality of communication modes;

a controller that selects a communication channel and an independent second channel, the second channel transmitting the communication mode in use on the communication channel to at least one of the wireless terminals, the controller controlling the transceiver to support data routing on the communication channel while managing access to the communication channel via the second channel.

10. The communication network of claim 9, wherein the plurality of communication modes includes a plurality of spread spectrum modes.

11. In a communication network, a plurality of wireless access devices capable of communicating with a plurality of wireless terminals, each of the plurality of wireless access devices comprising:

a first radio controllable to support a first communication channel operating pursuant to a first mode of a plurality of modes;

a second radio controllable to support a second communication channel operating independently of the first radio pursuant to a second mode of the plurality of modes; and

a controller operable to switch from the second communication channel to the first communication channel when the need for access to the communication channel arises.

12. The communication network of claim 11, wherein the first mode of the plurality of modes includes one of a plurality of spread spectrum modes.

13. The communication network of claim 11, wherein the first mode is a spread spectrum communication mode and the second mode is a control mode for managing communication with the plurality of wireless terminals.

14. The communication network of claim 13, wherein the first radio comprises a multimode radio and the second radio comprises a transmitter.

15. The communication network of claim 11, wherein the first mode of the plurality of modes includes a communication mode operating in one or more frequency bands.

16. A communication network for collecting and communicating data, comprising:

a wireless access device comprising a control circuit and a first RF transceiver that selectively operates in one of a plurality of spread spectrum modes, the plurality of spread spectrum modes of the first RF transceiver comprising a direct sequence transmission mode and a frequency hopping mode;

at least one mobile terminal comprising a second RF transceiver that operates in at least one of a plurality of spread spectrum modes; and

the control circuit being responsive to transmissions received from the first RF transceiver for evaluating communication performance and dynamically selecting one of the plurality of spread spectrum modes of the first RF transceiver while taking into consideration the at least one of the plurality of spread spectrum modes of the second RF transceiver.

17. A communication network for collecting and communicating data, comprising:

a wireless access device comprising a control circuit and a first RF transceiver that selectively operates in one of

a plurality of spread spectrum modes, the plurality of spread spectrum modes of the first RF transceiver comprising a direct sequence transmission mode and a channelized direct sequence mode;

at least one mobile terminal comprising a second RF transceiver that operates in at least one of a plurality of spread spectrum modes; and

the control circuit being responsive to transmissions received from the first RF transceiver for evaluating communication performance and dynamically selecting one of the plurality of spread spectrum modes of the first RF transceiver while taking into consideration the at least one of the plurality of spread spectrum modes of the second RF transceiver.

18. A communication network for collecting and communicating data, comprising:

a wireless access device comprising a control circuit and a first RF transceiver that selectively operates in one of a plurality of spread spectrum modes, the plurality of spread spectrum modes of the first RF transceiver comprising a frequency hopping mode and a hybrid frequency hopping mode;

at least one mobile terminal comprising a second RF transceiver that operates in at least one of a plurality of spread spectrum modes; and

the control circuit being responsive to transmissions received from the first RF transceiver for evaluating communication performance and dynamically selecting one of the plurality of spread spectrum modes of the first RF transceiver while taking into consideration the at least one of the plurality of spread spectrum modes of the second RF transceiver.

* * * * *

Exhibit B

US005844893A

United States Patent [19]

Gollnick et al.

[11] Patent Number: 5,844,893

[45] Date of Patent: Dec. 1, 1998

[54] SYSTEM FOR COUPLING HOST COMPUTER MEANSWITH BASE TRANSCEIVER UNITS ON A LOCAL AREA NETWORK

[75] Inventors: **Charles D. Gollnick**, Cedar Rapids; **Ronald E. Luse**, Marion; **John G. Pavek**; **Marvin L. Sojka**, both of Cedar Rapids; **James D. Cnossen**, Marion; **Robert G. Geers**, Cedar Rapids; **Arvin D. Danielson**, Solon; **Mary L. Detweiler**, Parnell; **Gary N. Spiess**, Lisbon; **Guy J. West**, Cedar Rapids; **Amos D. Young**, Cedar Rapids; **Keith K. Cargin, Jr.**, Cedar Rapids; **Richard C. Arensdorf**, Cedar Rapids; **Ronald L. Mahany**, Cedar Rapids, all of Iowa

[73] Assignee: **Norand Corporation**, Cedar Rapids, Iowa

[21] Appl. No.: **486,083**

[22] Filed: **Jun. 7, 1995**

Related U.S. Application Data

[63] Continuation of Ser. No. 277,944, Jun. 29, 1994, which is a continuation of Ser. No. 57,218, May 4, 1993, abandoned, which is a continuation of Ser. No. 700,708, May 14, 1991, abandoned.

[51] **Int. Cl.**[6] **H04Q 7/00**; H04Q 7/24

[52] **U.S. Cl.** **370/329**; 370/331; 370/338; 370/328; 375/202

[58] **Field of Search** 370/95.1, 95.2, 370/95.3, 85.7, 84, 94.2, 85.2, 422, 431, 474, 414, 417, 346, 345, 349, 352, 331, 329, 338; 375/200, 202, 216; 379/61, 58; 455/17, 34.1, 33.1, 54.1, 54.2, 33.4, 38.1

[56] **References Cited**

U.S. PATENT DOCUMENTS

4,414,661	11/1983	Karlstrom	370/332
4,837,858	6/1989	Ablay et al.	455/34.1
4,940,974	7/1990	Sojka	340/825.08
4,984,247	1/1991	Kaufmann et al.	375/200
5,070,530	12/1991	Mahany et al.	455/67.4
5,142,534	8/1992	Simpson et al.	370/330
5,297,144	3/1994	Gilbert et al.	370/348

Primary Examiner—Wellington Chin
Assistant Examiner—Melissa Kay Carman
Attorney, Agent, or Firm—Akin, Gump, Strauss, Hauer & Feld, LLP

[57] **ABSTRACT**

Improved apparatus for a radio communication system having a multiplicity of mobile transceiver units selectively in communication with a plurality of base transceiver units which communicate with one or two host computers for storage and manipulation of data collected by bar code scanners or other collection means associated with the mobile transceiver units. A network controller provides selective interface means to be employed between the host computers and the base transceivers whereby low data rate base transceivers may be utilized with the network controller while spread spectrum or high data rate networked base transceivers may be also utilized. The network controller may allow selection of interface means for three of its ports from its front panel with use of three input keys. The network controller is entirely external to the host computer or computers, and can couple to a variety of commonly encountered host ports. Most preferable one- or two-network controller ports can each be software configured to match any needed host port, so that the host computer(s) need not be adapted to a radio network protocol accommodating the multiple base transceiver units.

14 Claims, 13 Drawing Sheets

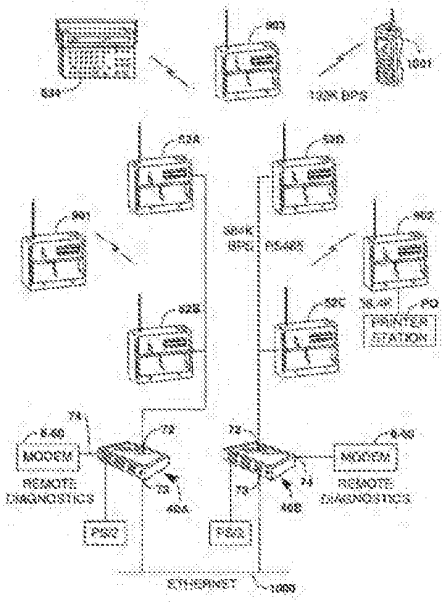

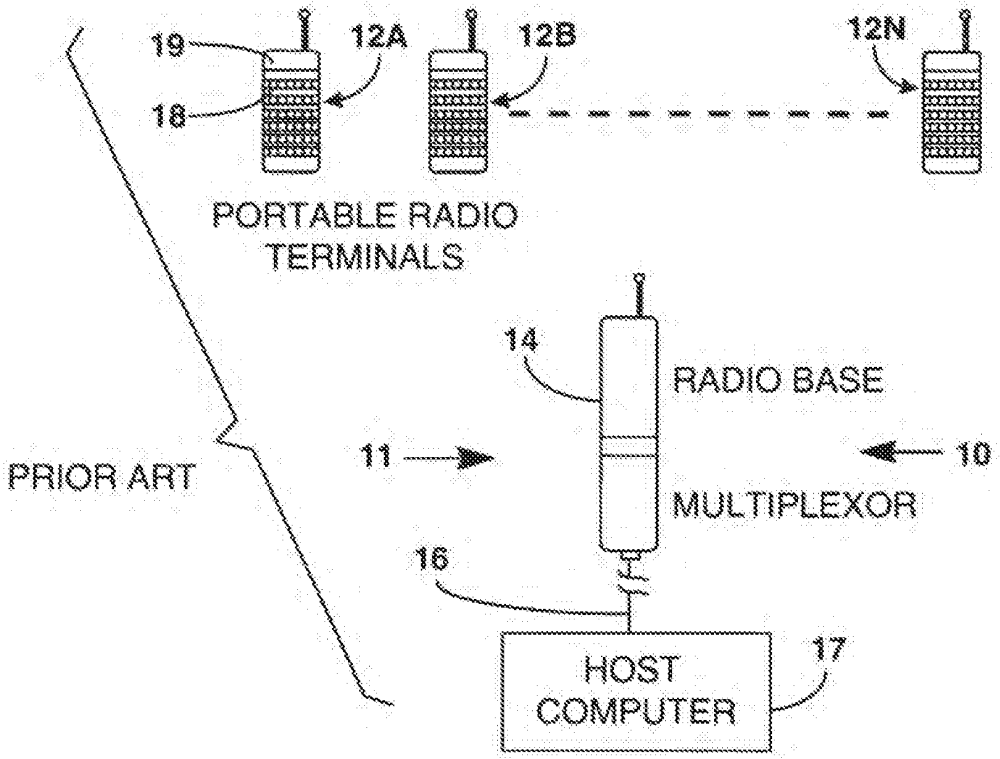
19
18
12A
12B
12N
PORTABLE RADIO
TERMINALS
14
RADIO BASE
11
10
PRIOR ART
MULTIPLEXOR
16
HOST
COMPUTER
17

Fig. 1

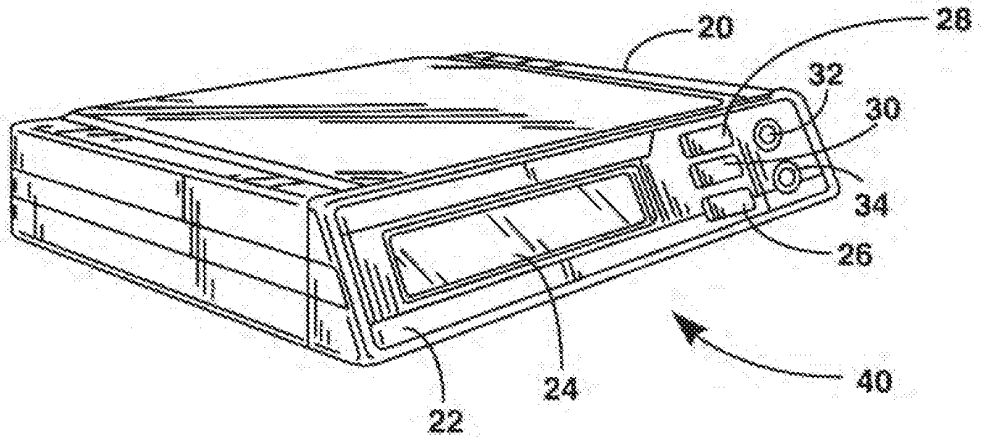

Fig. 2

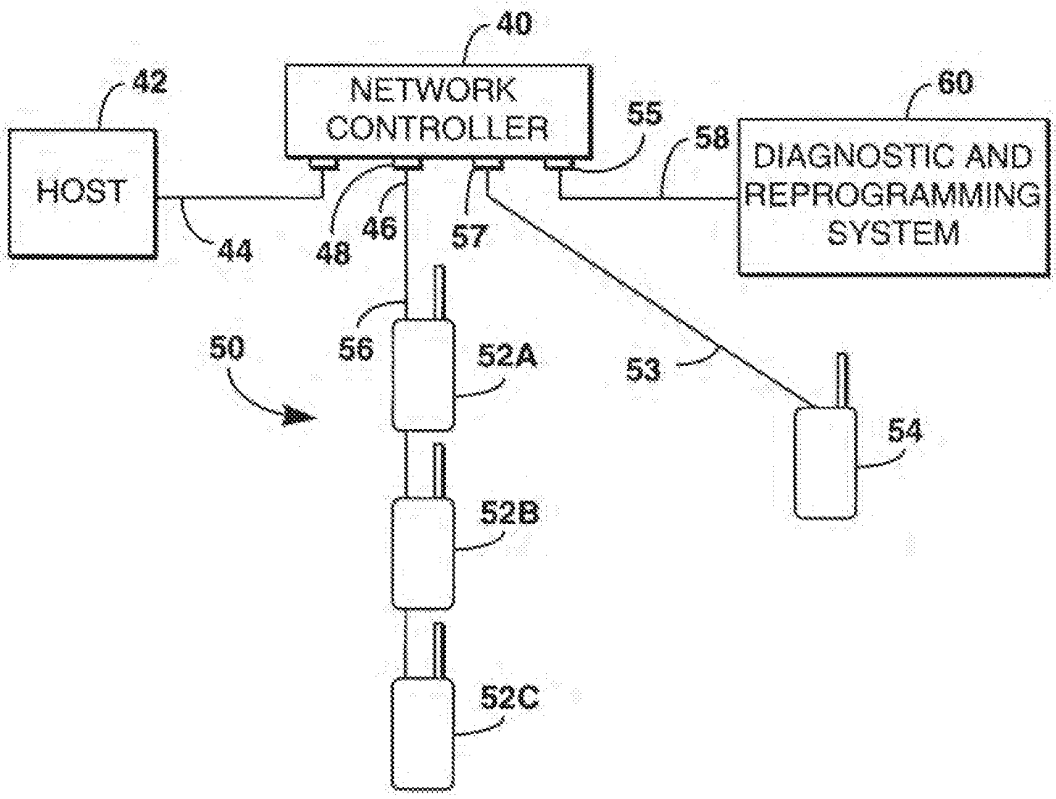
40
NETWORK CONTROLLER
42
HOST
44
48
46
57
55
58
60
DIAGNOSTIC AND REPROGRAMMING SYSTEM
50
56
52A
53
54
52B
52C

Fig. 3

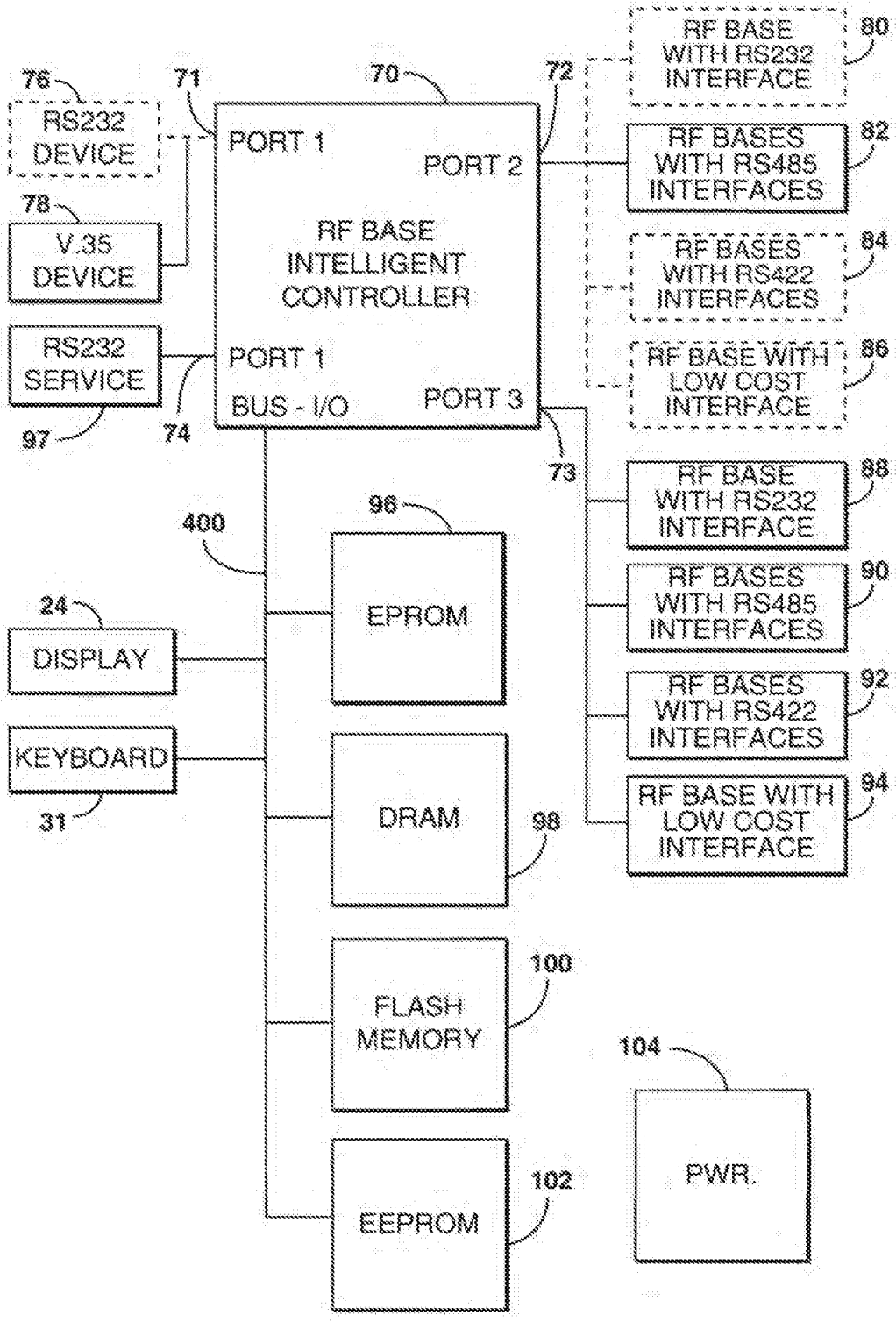
RF BASE WITH RS232 INTERFACE
80
76
71
70
72
RS232 DEVICE
PORT 1
PORT 2
RF BASES WITH RS485 INTERFACES
82
78
V.35 DEVICE
RF BASE INTELLIGENT CONTROLLER
RF BASES WITH RS422 INTERFACES
84
RS232 SERVICE
PORT 1
RF BASE WITH LOW COST INTERFACE
86
BUS - I/O
PORT 3
97
74
73
RF BASE WITH RS232 INTERFACE
88
96
400
EPROM
RF BASES WITH RS485 INTERFACES
90
24
DISPLAY
RF BASES WITH RS422 INTERFACES
92
KEYBOARD
DRAM
RF BASE WITH LOW COST INTERFACE
94
31
98
FLASH MEMORY
100
104
PWR.
EEPROM
102

Fig. 4

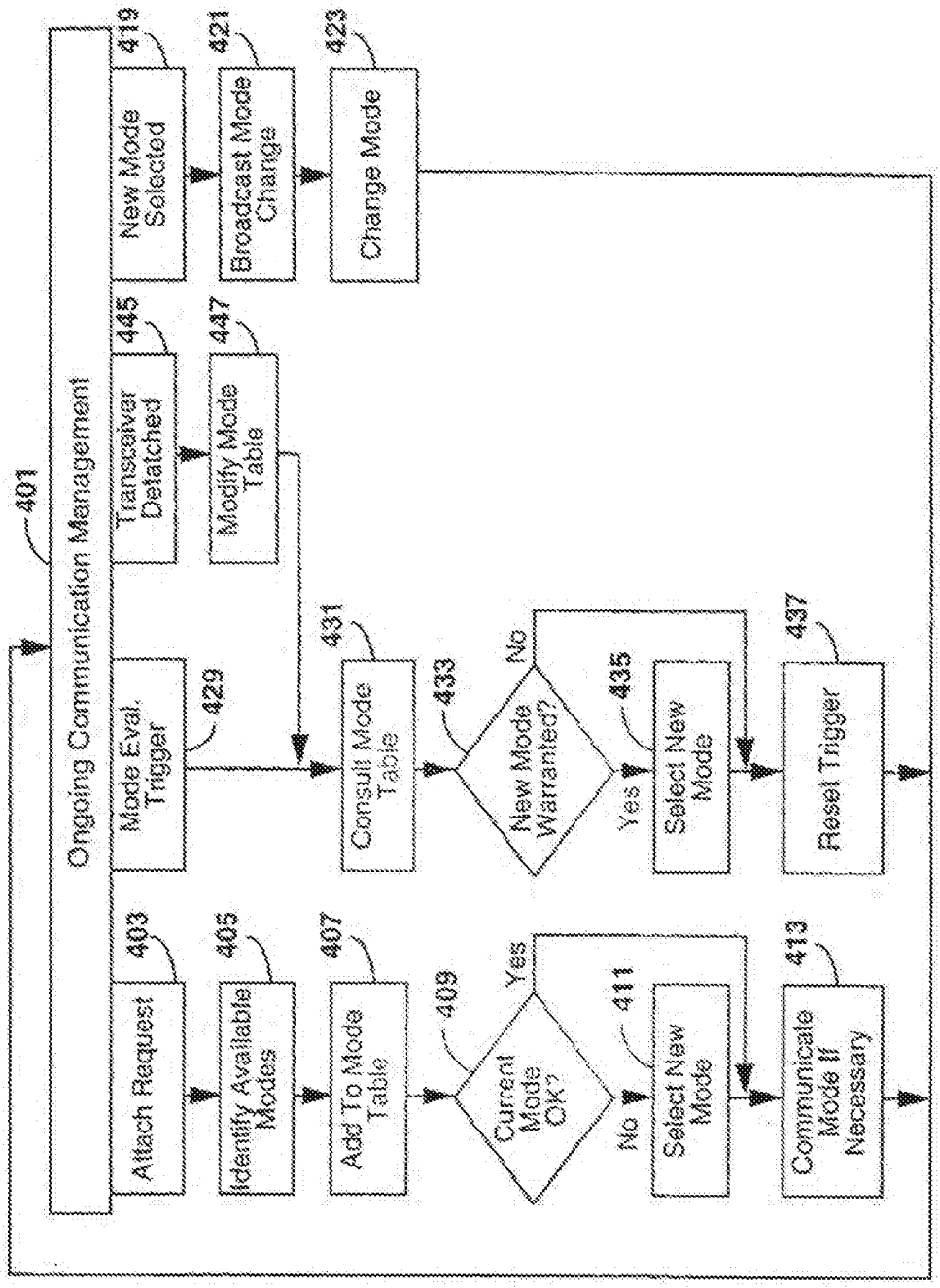
401
Ongoing Communication Management
Attach Request
403
Identify Available Modes
405
Add To Mode Table
407
Current Mode OK?
409
Yes
No
Select New Mode
411
Communicate Mode If Necessary
413
Mode Eval. Trigger
429
Consult Mode Table
431
New Mode Warranted?
433
No
Yes
Select New Mode
435
Reset Trigger
437
Transceiver Detached
445
Modify Mode Table
447
New Mode Selected
419
Broadcast Mode Change
421
Change Mode
423

FIG. 1B

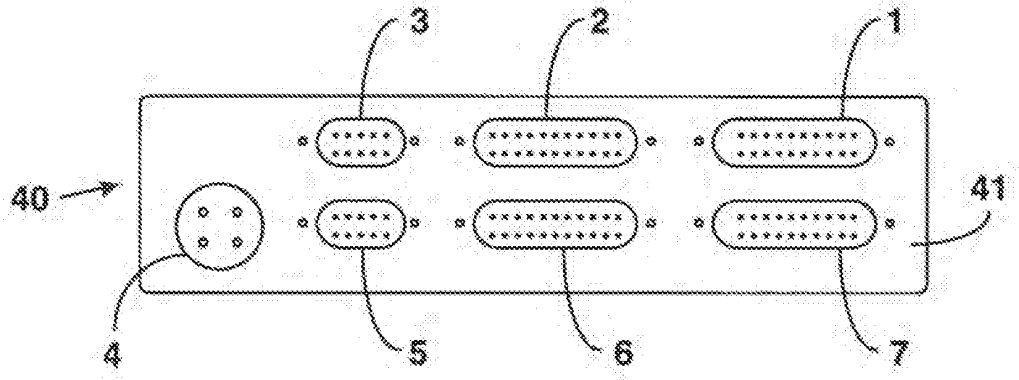

Fig. 5

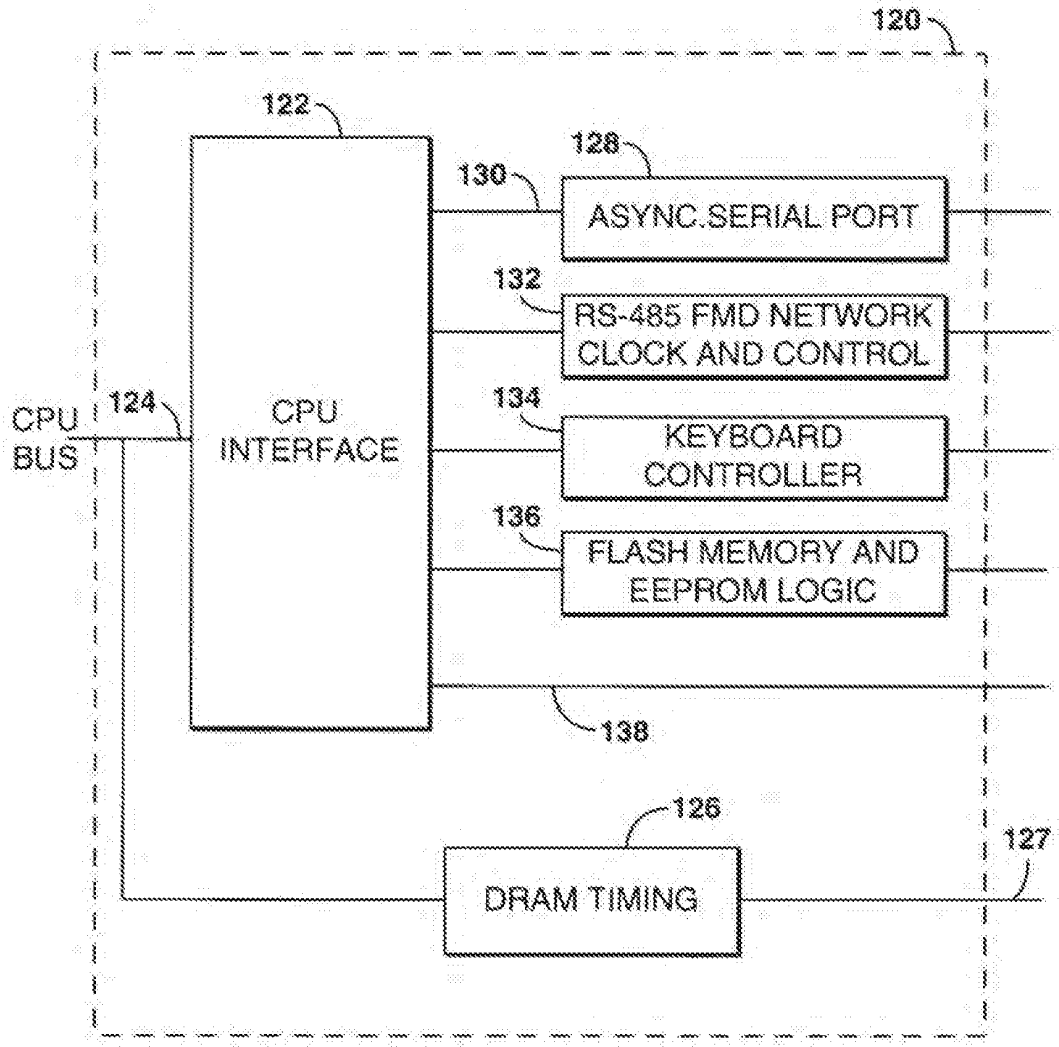
120
122
128
130
ASYNC.SERIAL PORT
132
RS-485 FMD NETWORK
CLOCK AND CONTROL
CPU
BUS
124
CPU
INTERFACE
134
KEYBOARD
CONTROLLER
136
FLASH MEMORY AND
EEPROM LOGIC
138
126
127
DRAM TIMING

Fig. 6

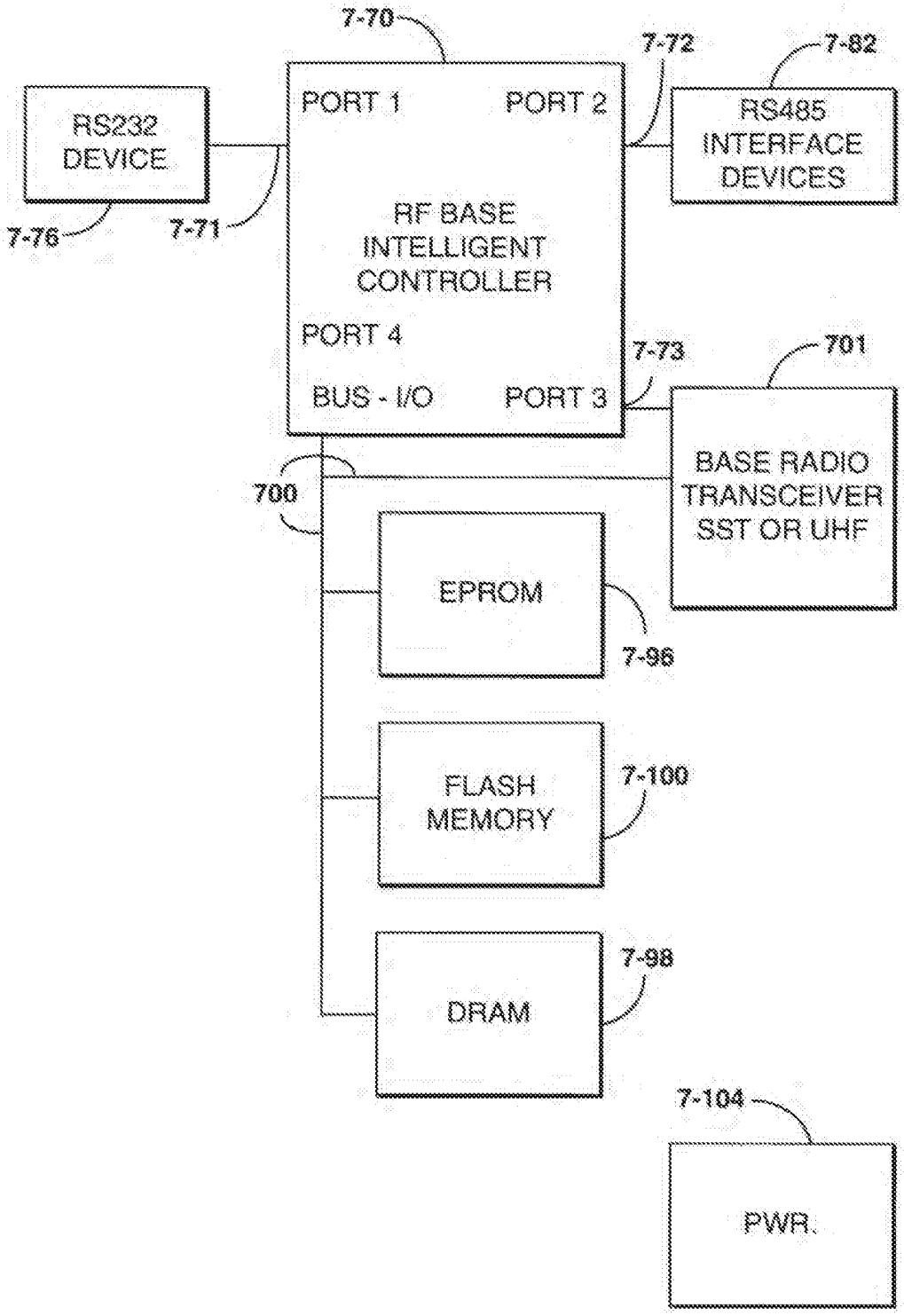
7-70
7-72
7-82
RS232 DEVICE
PORT 1
PORT 2
RS485 INTERFACE DEVICES
RF BASE INTELLIGENT CONTROLLER
7-76
7-71
PORT 4
7-73
701
BUS - I/O
PORT 3
BASE RADIO TRANSCEIVER SST OR UHF
700
EPROM
7-96
FLASH MEMORY
7-100
DRAM
7-98
7-104
PWR.

Fig. 7

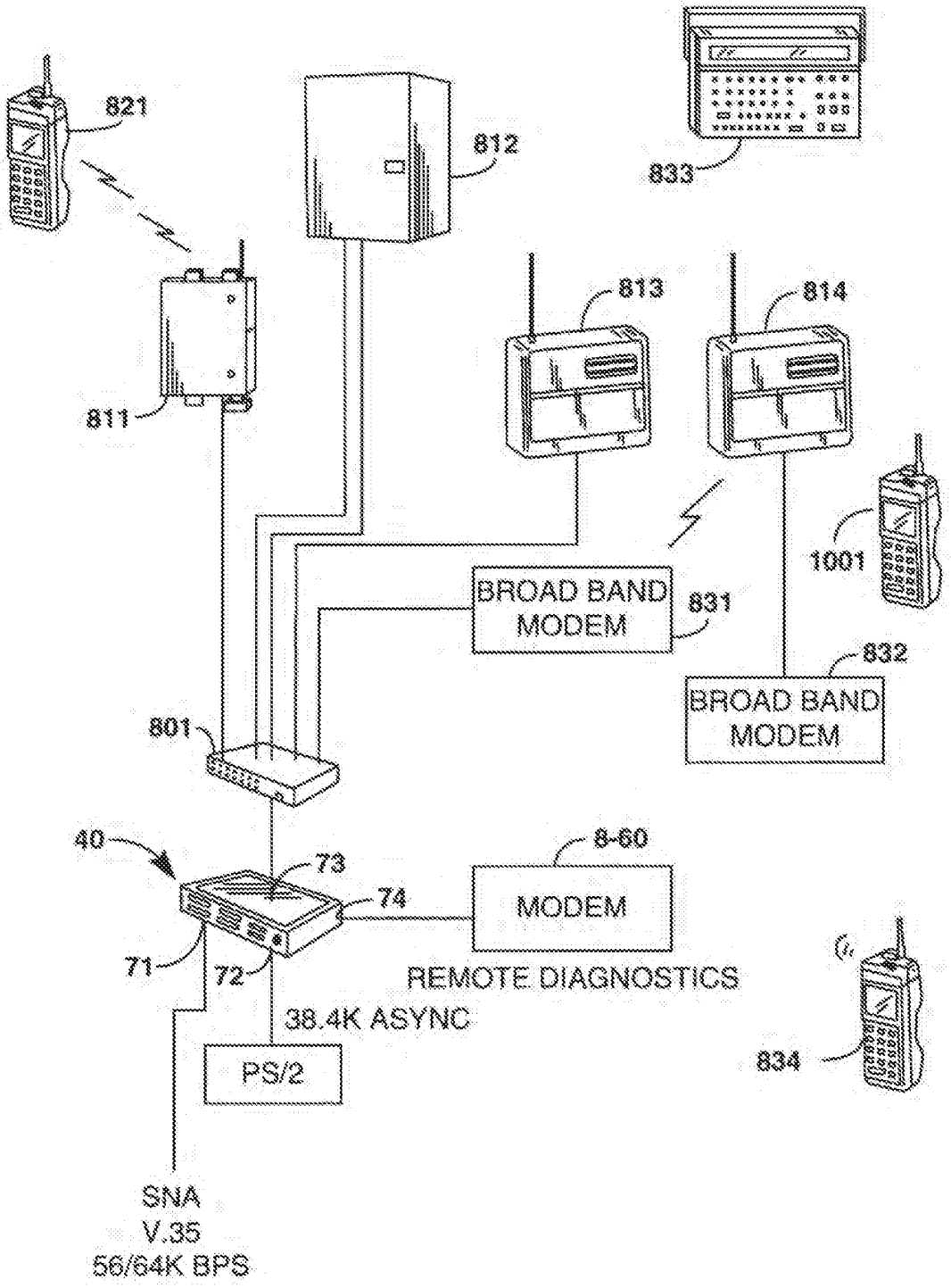
821
812
833
813
814
811
1001
BROAD BAND MODEM
831
832
BROAD BAND MODEM
801
40
73
74
8-60
MODEM
71
72
REMOTE DIAGNOSTICS
38.4K ASYNC
PS/2
834
SNA
V.35
56/64K BPS

Fig. 8

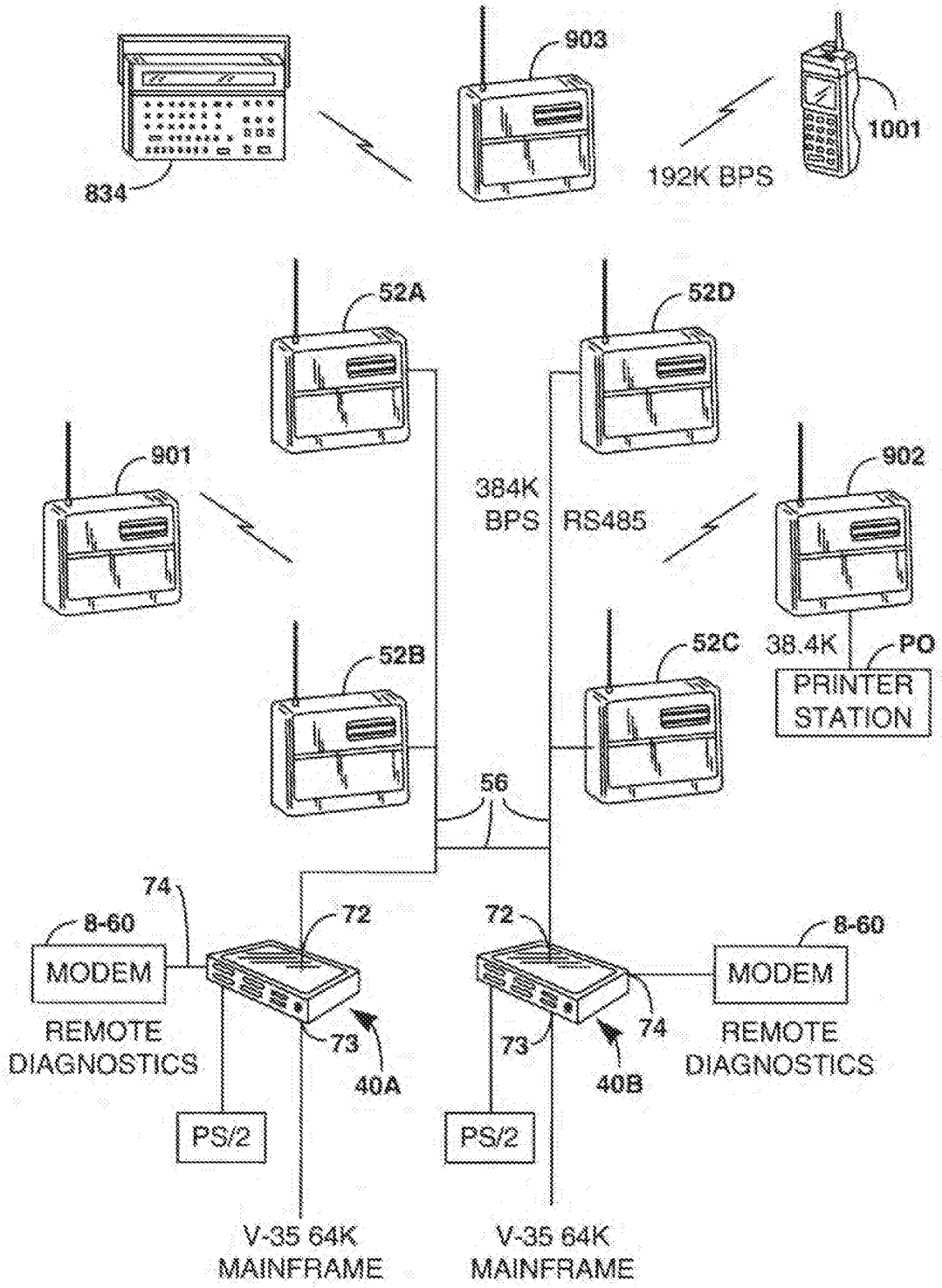
903
1001
834
192K BPS
52A
52D
901
902
384K
BPS
RS485
38.4K
PO
PRINTER
STATION
52B
52C
56
74
72
8-60
MODEM
REMOTE
DIAGNOSTICS
73
40A
40B
PS/2
V-35 64K
MAINFRAME

Fig. 9

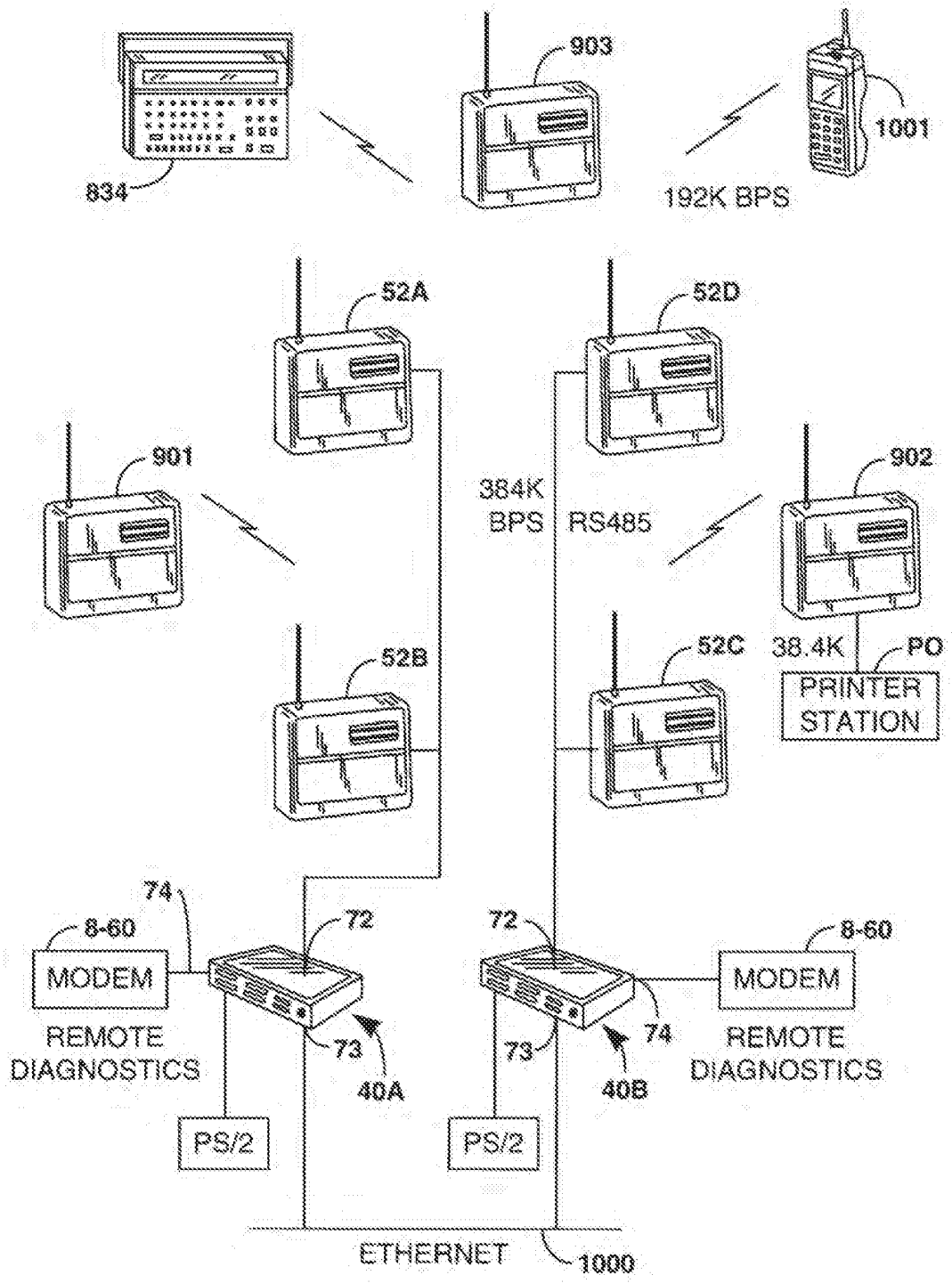
903
1001
834
192K BPS
52A
52D
901
902
384K
BPS
RS485
52B
52C
38.4K
PO
PRINTER
STATION
74
72
72
8-60
8-60
MODEM
MODEM
REMOTE
DIAGNOSTICS
REMOTE
DIAGNOSTICS
73
73
74
40A
40B
PS/2
PS/2
ETHERNET
1000

Fig. 10

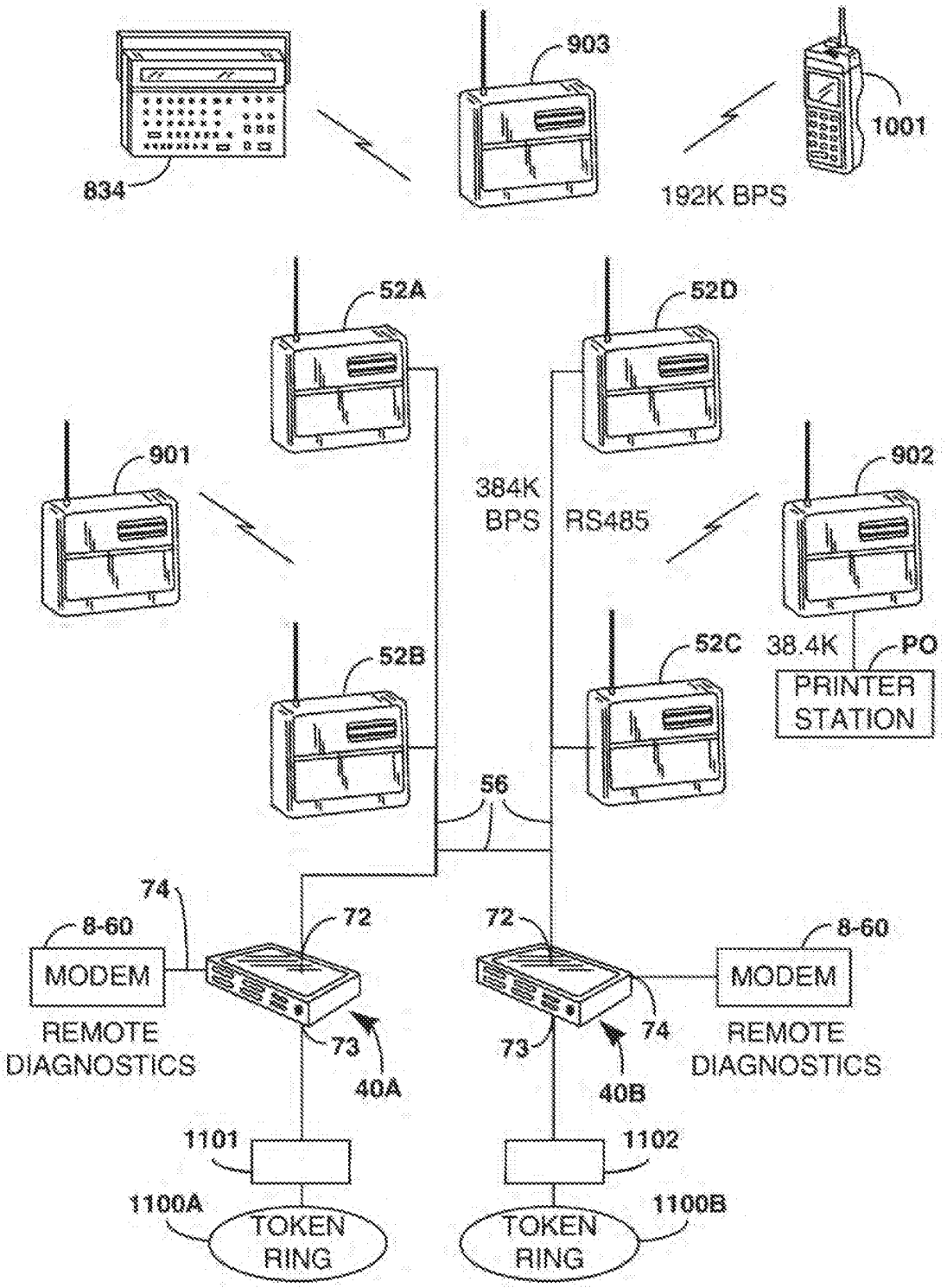
903
1001
834
192K BPS
52A
52D
901
902
384K
BPS
RS485
38.4K
PO
PRINTER
STATION
52B
52C
56
74
72
8-60
MODEM
REMOTE
DIAGNOSTICS
73
40A
40B
1101
1102
1100A
1100B
TOKEN
RING

Fig. 11

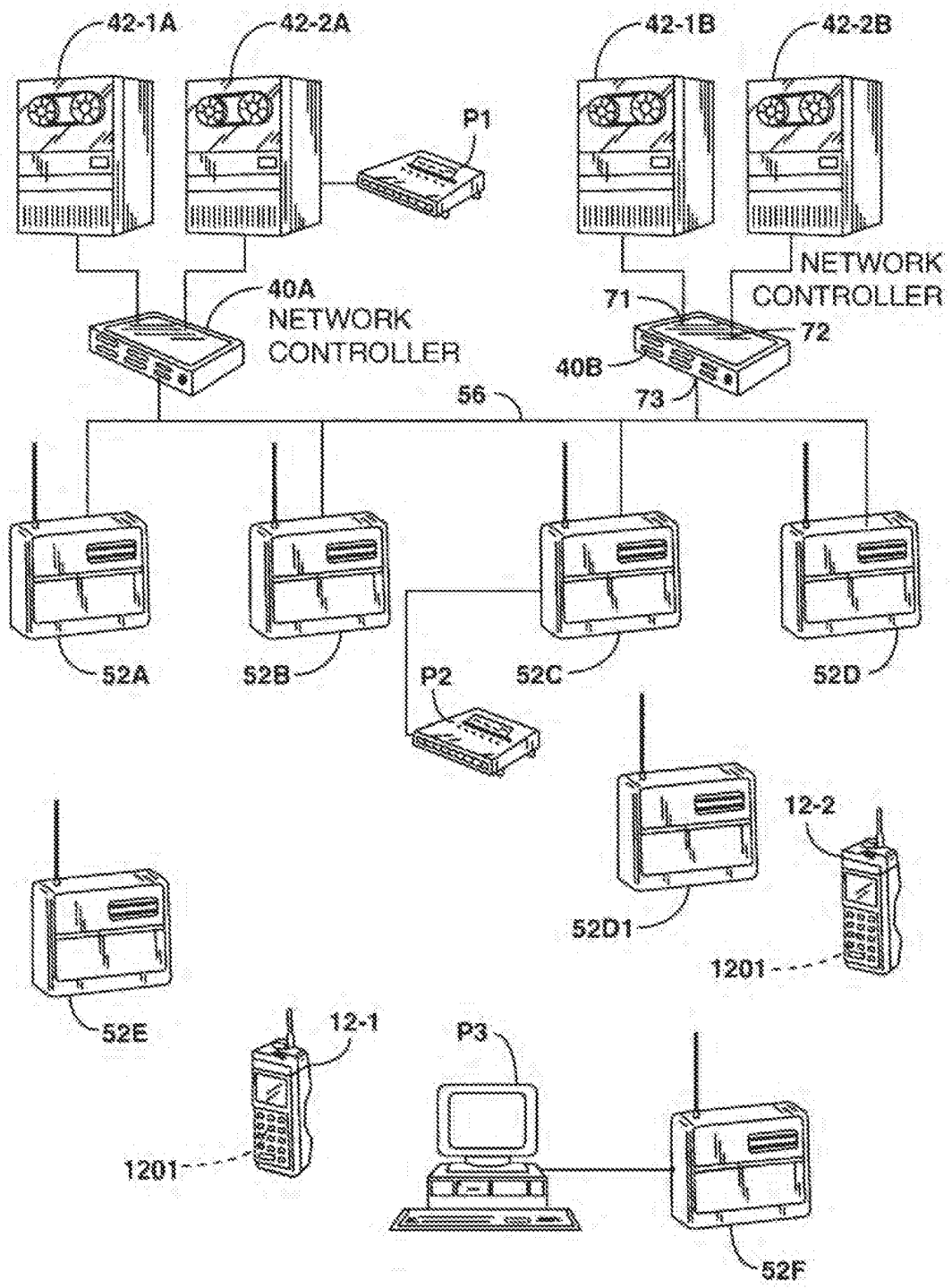
42-1A
42-2A
42-1B
42-2B
P1
NETWORK
CONTROLLER
40A
NETWORK
CONTROLLER
71
72
40B
73
56
52A
52B
52C
52D
P2
12-2
52D1
1201
52E
12-1
P3
1201
52F

Fig. 12

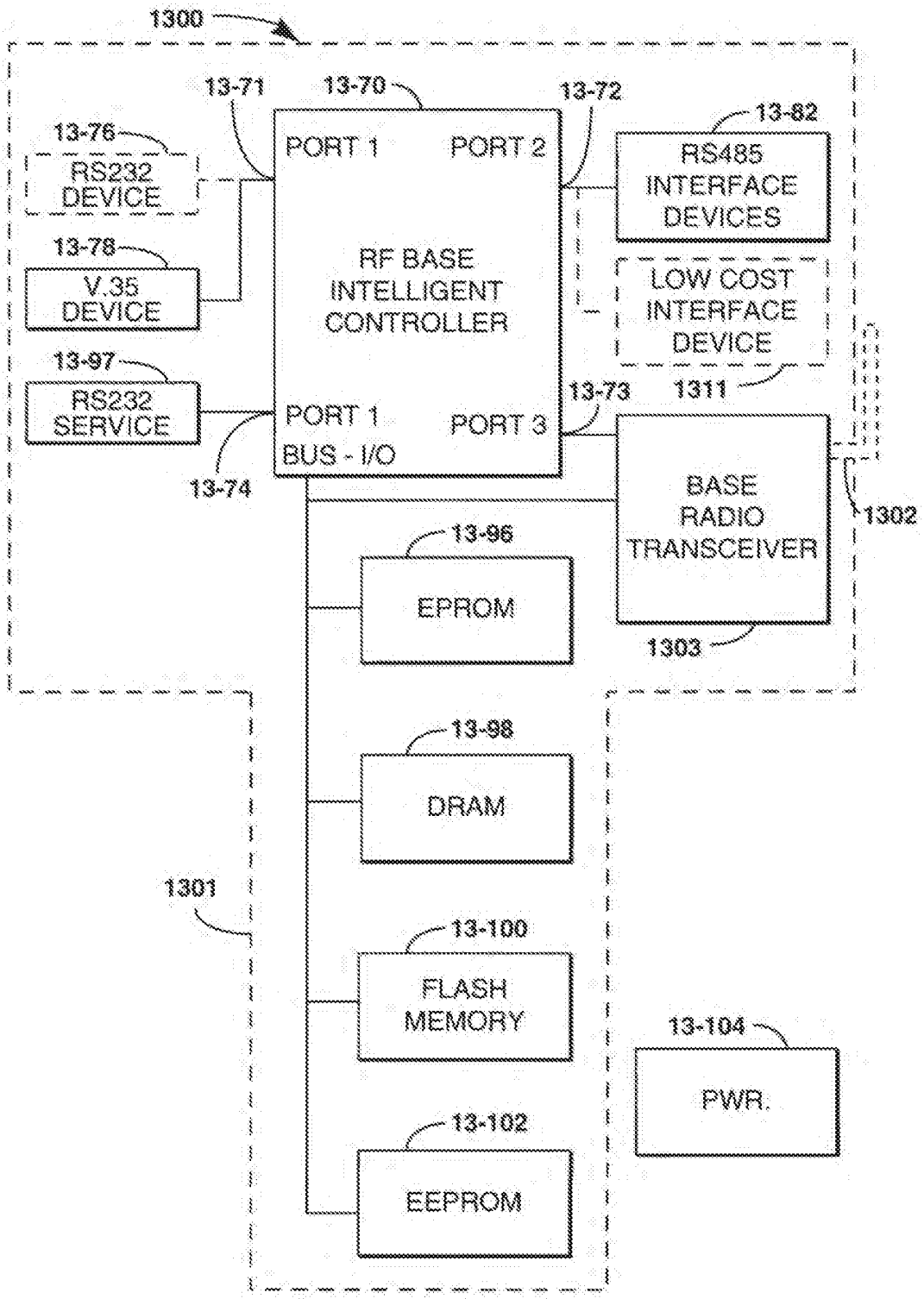
1300
13-71
13-70
13-72
13-76
RS232 DEVICE
PORT 1
PORT 2
13-82
RS485 INTERFACE DEVICES
13-78
V.35 DEVICE
RF BASE INTELLIGENT CONTROLLER
LOW COST INTERFACE DEVICE
13-97
RS232 SERVICE
13-73
1311
PORT 1 BUS - I/O
PORT 3
13-74
BASE RADIO TRANSCEIVER
1302
13-96
EPROM
1303
13-98
DRAM
1301
13-100
FLASH MEMORY
13-104
PWR.
13-102
EEPROM

Fig. 13

SYSTEM FOR COUPLING HOST COMPUTER MEANSWITH BASE TRANSCEIVER UNITS ON A LOCAL AREA NETWORK

CROSS-REFERENCE TO RELATED APPLICATIONS

This case is a continuation of application Ser. No. 08/277,944, filed Jan. 29, 1994 which is a continuation of application Ser. No. 08/057,218, filed on May 4, 1993 and abandoned, which is a continuation of application Ser. No. 07/700,704, filed May 14, 1991 and abandoned.

BACKGROUND OF THE INVENTION

The present invention in a preferred implementation relates to improvements in radio data communication systems wherein a number of mobile transceiver units are to transmit data to a number of base stations under a wide range of operating conditions. The invention is preferably to be applicable as an upgrade of an existing data capture system wherein a number of hand-held transceiver units of an earlier design are already in the field representing a substantial economic investment in comparison to the cost of base stations, accessories and components. In installations spread over an extensive area, a large number of mobile portable transceiver units may be employed to gather data in various places and multiple base stations may be required. In a variety of such installations such as warehouse facilities, distribution centers, and retail establishments, it may be advantageous to utilize not only multiple bases capable of communication with a single host, but with multiple hosts as well.

An early RF data collection system is shown in Marvin L. Sojka, U.S. Pat. No. 4,924,462 assigned to the assignee of the present application. This patent illustrates (in the sixth figure) a NORAND® RC2250 Network Controller which supports one base transceiver for communication with multiple mobile portable transceivers. The exemplary prior art device is capable of communicating with a host computer through an RS232C interface at up to 19,200 baud in asynchronous mode. In order for an optional RS422 interface to be substituted for an RS232C interface, the unit must be opened and substitute circuitry components installed within it.

SUMMARY OF THE INVENTION

The present invention provides an improved network controller to serve as a consolidation link between one or more host computers and one or more base transceiver units, each of which may be communicative with many mobile portable transceiver units being moved about a warehouse complex for the collection of data. The network controller invention provides a front panel display with three operator-available control keys for selections of function and up or down scrolling through choices provided on the front panel display.

The invention will allow incorporation with existing base transceivers as well as with high-speed spread spectrum and synthesized radio networks at the same time. The invention allows the creation of a radio communication system with multiple host devices using differing communication protocols. Higher speed host device interfaces may be used as a result of the inclusion of the invention in an existing radio communication system. The invention provides means for the coupling of large networks of serially interconnected base transceivers over a single twisted pair of wires.

The invention provides a plurality of communication ports for interconnection to one or more host computers and one or more base transceiver systems or units. The communication ports available for connection with the host computers may be configured to provide selective interfaces without any requirement for rewiring or other hardware modification. A first port of the controller may be selected to interface with a host computer by either RS232 or V.35 means. The selection of interface means may be performed by the end user with choices made on the front panel control keys of the device.

A second port of the invention may be selected to provide interface means by a choice of RS232, RS422, or RS485 means or through a NORAND® Radio One Node Network proprietary interface. This second port may be communicative with a second host computer or with existing installed base units when RS232 means are selected, or with existing base units when RS422 means are selected. In addition, the second port may be configured to communicate with a network of new generation base units, either by RS485 interface protocol, or by the NORAND® Radio One Node Network proprietary interface.

The third port of the invention, like the second port hereof, may be selectively configured to communicate by RS232, RS422, RS485 or NORAND® Radio One Node Network proprietary interface means. For both the second and third ports, as well as for the host port, configuration of the port is accomplished by selection of the port on the front panel of the invention controller with the select key and then selection of the desired interface configuration through appropriate use of the up and down keys to scroll to the correct means to be selected. Because the invention permits internal, software-controlled, selection of the desired interface means for each port, the end user may easily self configure the unit for a particular use, thereby providing a highly versatile device. In addition the configuration choice means is simplified for the user, because the choices are conveniently displayed on the front panel display and a choice can be made from a scrollable list.

The introduction of the selectable RS485 interface in the present invention enables the controller to be interfaced to a network of new generation base station units which may comprise several base transceiver units configured on a single network circuit.

The inclusion of the selectable NORAND® Radio One Node Network proprietary interface means for the second and the third ports provides means for incorporation of new generation base transceiver units having particularized wiring and control requirements.

A diagnostic port configured for RS232 interface means is provided to provide selective communication, either remotely through modem means, or through direct coupling, with diagnostic and reprogramming apparatus.

The invention is provided with an application specific integrated circuit used in combination with a control processor unit capable of a speed of 16.667 mhz with direct memory access functionality available at its communication ports. Internal memory components to be coupled to the central processor unit and application specific integrated circuit will comprise nonvolatile electrically erasable programmable read only memory elements, dynamic random access memory elements, and nonvolatile FLASH memory elements which permit erasure by application of +12 VDC to prescribed pins.

Power supply means are supplied exteriorly to the invention in order to make the invention standardized for United

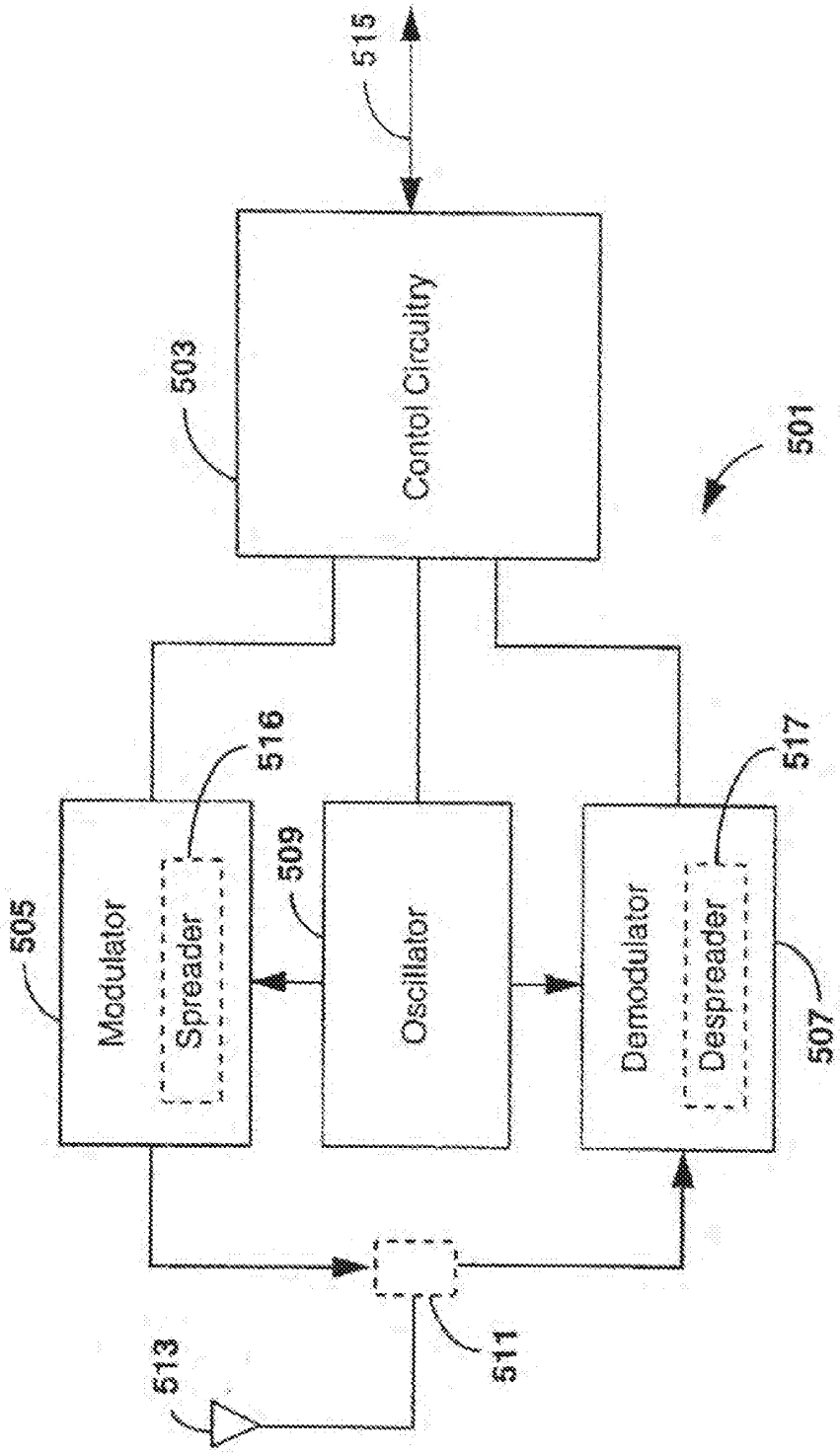
515
503
Control Circuitry
501
516
505
Modulator
Spreader
509
Oscillator
517
Demodulator
Despreader
507
513
511

FIG. 1C

States, European and other countries' local power company output characteristics.

It is therefore an object of the invention to provide a radio communication system which permits the interconnection of one or two host computer devices to a multiplicity of base transceiver units which may include both prior art existing installed units and new generation units capable of spread spectrum or synthesized radio transmission.

It is a further object of the invention to provide a radio communication system network controller which may allow interconnection of a multiplicity of devices which are operating with non-uniform electrical interface characteristics.

It is a further object of the invention to provide a radio communication system network controller which may be configured for varying interface requirements by operation of a limited number of front panel keys.

It is a further object of the invention to provide a radio communication system network controller which will allow utilization of single twisted pair networks of serially networked base transceiver units, each of which being communicative with a large number of individual mobile data collection transceiver units.

These are other objects of the invention will be apparent from examination of the detailed description which follows.

DESCRIPTION OF THE DRAWING FIGURES

FIG. 1 is a block diagram of the prior art data communication system.

FIG. 2 is perspective view of the invention.

FIG. 3 is a schematic representation of an exemplary radio communication system utilizing the invention.

FIG. 4 is a diagrammatic illustration of the control circuitry elements of the invention.

FIG. 5 is a rear elevation view of the invention.

FIG. 6 is a diagrammatic illustration of the application specific integrated circuit of the invention.

FIG. 7 is a block diagram showing an exemplary implementation of intelligent network and router transceiver units such as the network transceiver units of FIG. 3.

FIG. 8 is a diagram of an RF system utilizing a network controller according to FIGS. 2–6, with one of its network ports configured for communication with a second host, and another of its ports coupled with a multiplicity of RF transceivers via an adapter unit.

FIG. 9 is a diagram illustrating the use of two network controllers according to FIGS. 2–6, configured for dual host computers each, and having their relatively high data rate extended distance network ports coupled with a multiplicity of intelligent network and router transceiver units implemented according to FIG. 7.

FIG. 10 is a diagram similar to FIG. 9 but showing the pair of coupled network controllers interfaced to a common relatively high data rate system having multiple hosts (e.g.) a local area network of the Ethernet type or equivalent e.g. fiber optic type).

FIG. 11 is a diagram similar to FIG. 10 but indicating the network controllers being coupled to respective different high data rate multiple host systems (e.g. token ring type local area networks or other individual networks e.g. fiber optic loop networks of the collision-sense multiple-access type).

FIG. 12 is a view similar to FIG. 9 but intended to diagrammatically indicate a distribution of network and router transceivers and other elements of an on-line RF data collection system over an extensive area of a facility e.g. of one of the types previously mentioned.

FIG. 13 shows an intelligent integrated controller and radio base unit which unifies controller and radio components such as shown in FIG. 7 into a single housing of the size represented in FIGS. 2 and 5.

DETAILED DESCRIPTION OF THE INVENTION

FIG. 1 shows an existing radio frequency data transmission system 10 wherein a base station transceiver means 11 has a number of mobile transceiver units such as 12A, 12B, . . . , 12N in radio communication therewith.

By way of example, the base station may be comprised of a radio base unit 14 such as the model RB3021 of Norand Corporation, Cedar Rapids, Iowa, which forms part of a product family known as the RT3210 system. In this case, the radio base 14 may receive data from the respective mobile RF terminals, e.g. of type RT3210, and transmit the received data via a network controller and a communications link 16 (e.g. utilizing an RS-232 format) to a host computer 17.

The data capture terminals 12A, 12B, . . . , 12N may each be provided with a keyboard such as 18, a display as at 19, and a bar code scanning capability, e.g. via an instant bar code reader such as shown in U.S. Pat. No. 4,766,300 issued Aug. 23, 1988 and known commercially as the 20/20 High Performance Bar Code Reader of Norand Corporation.

FIG. 2 provides a perspective view of the invention 40 in the preferred embodiment case 20. Front panel 22 is provided with display 24 and select key 26, up key 28 and down key 30. Power indicator 32 comprises a low power green light emitting diode which is energized when power is supplied to the invention 10. Error condition indicator 34 is a yellow LED which is software controlled to be energized if the invention 10 is in error condition.

FIG. 3 discloses a diagrammatic illustration of a radio communication system in accordance with the present invention. Invention network controller 40 is coupled to host computer 42 such that data may be interchanged between the devices over host communications link 44, which may be either in an RS232C format or selectively in an RS422 format. The host communication link 44 couples to controller 40 at host port 46.

First communication port 48 of controller 40 provides means for coupling of network 50 to controller 40. Network 50 comprises a number of base RF transceiver units 52A, 52B and 53B, each of which may be selectively employed in the radio frequency communication of data from mobile transceiver units. It is to be understood that base transceiver units 52 are designed and equipped to be operable in the exchange of data with network controller 40 over network link 56 such that each base transceiver unit 52A, 52B, or 53C may independently exchange data with network controller 40 through first communication port 48. When first communication port 48 is intended for operation with a network such as network 50 of base transceiver units 52A, 52B and 53C, for example, network controller 40 is selectively operated to provide an RS485 interface at first communication port 48. First communication port 48 may be alternately selected to operate as an RS232C interface, as an RS422 interface, as a proprietary NORAND® Radio One Node Network interface or as a high speed V.35 interface. The selection of interface to be provided at first communication port 48 is front panel controlled, that is, the user may operate from panel keys 28, 30 and 26 (See FIG. 2) to direct the proper interface to be provided at first communication port 48.

Base transceiver units **52A**, **52B**, and **52C** are coupled to network link **56** by serial means, rather than parallel means, and each may be caused to transmit or to receive independently from the others while additionally being communicative with network controller **40** in a randomly chosen fashion.

It is further to be understood that interface translation is provided within controller **40** such that data communicated at first communication port **48** may be directed to host **42** at port **46** via properly chosen interface means as is required by the host **42** with which communication is intended.

Like first communication port **48**, second communication port **57** may be internally switched among interface choices of these types: RS232C, RS422, V.35, RS485 and proprietary NORAND® Radio One Node Network interface. In the illustrated arrangement of FIG. **3**, for example, second communication port **57** is coupled over third link **53** to previously installed base transceiver **54**, which heretofore had been used in a prior art system as is illustrated in FIG. **1**. Because of limitations of base transceiver **54**, it must communicate via RS232C interface format and therefore, second communication port **57** must be selected to operate in RS232C interface mode. However, when second communication port **57** is desired to communicate with a network via RS485 interface, front panel keys **26**, **28** and **30** may be manipulated by the user to provide the RS485 interface availability at second communication port **57**. Likewise, second communication port **57** may be selected to operate as an RS422interface, as a V.35 interface, or as the proprietary NORAND® Radio One Node Network interface.

Diagnostic port **55** provides a fourth communication pathway for network controller **40**, providing an asynchronous port operable at 300 to 19,200 baud as an RS232C interface. When desirable, diagnostic port **55** may be coupled by diagnostic link **58** to diagnostic device **60** for purposes of error diagnosis of controller **40** by diagnostic device **60**, or for reprogramming of memory devices within controller **40** when desired. It is contemplated that diagnostic device **60** comprises a 16-bit microprocessor commonly known as a personal computer or "PC". The mode of coupling between diagnostic device **60** and network controller **40** may be direct or through remote means by use of a modem.

Referring now to FIG. **4**, a central processing unit **70** is provided with at least four data communication ports, illustrated at numerals **71**, **72**, **73**, and **74**. First data communication port **71** may be selectively coupled to RS232 interface member **76** or V.35 interface member **78**. The choice of whether RS232 interface member **76** or V.35 interface member **78** is chosen is dependent upon the operating characteristics presented by the host computer, such as host computer **42** of FIG. **3**, with which network controller **40** will communicate. The choice of whether first communication port **71** is coupled to interface member **76** or to interface member **78** depends on the front panel selection made by the user by keys **26**, **28**, and **30** shown in FIG. **2**.

Second communication port **72** may be selectively coupled to RS232 member **80** or to RS485 interface member **82** or to RS422 interface member **84** or to NORAND® Radio One Node Network proprietary interface member **86**. By use of front panel keys **26**, **28**, and **30** of FIG. **2**, the user may select second communication port **72** to be coupled to any one of interface members **80**, **82**, **84**, and **86**.

Third communication port **73** is identical to second communication, port **72** in functionality, being selectively couplable to RS232 interface member **88**, to RS485 interface member **90**, to RS422 interface member **92** or to NORAND® Radio One Node Network proprietary interface member **94**.

In the preferred embodiment of the invention **40**, central processing unit **70** of FIG. **4** comprises a Motorola™ 68302 integrated chip cooperative with an application specific integrated circuit. Central processing unit **70** employs novel features allowing the bidirectional use of a data communicative line of the Motorola™ 68302 chip and a single clock signal line to eliminate the need for coder-decoder members to be associated with the Motorola™ 68305 chip while allowing the use of only one pair of signal wires to be coupled to the RS485 interfaces **82** and **90** of FIG. **4**.

Fourth communication port **74** of central processing unit is coupled to asynchronous RS232 interface member **97** to be available for interconnection of a diagnostic device therewith.

Also coupled to central processing unit **70** are display member **24** and keyboard member **31** with which keys **26**, **28**, and **30** of front panel **22** (FIG. **2**) are interactive.

Memory elements including EPROM element **96**, DRAM unit **98**, FLASH memory unit **100** and EEPROM element **102** are intercoupled with each other and with central processing unit **70**.

Power supply member **104** is selectively attachable to invention network controller **40**. In order to avoid the necessity of different models of network controller **40** depending on the local electrical power utility's operating characteristics, power supply **104** is provided in optional models depending on the country in which it is to be used, power supply **104** being capable of providing satisfactory output power to network controller **40** regardless of the voltage or frequency of the input source provided to power supply **104**.

The application specific integrated circuit (ASIC) used in the invention network controller **40** is disclosed in FIG. **6** and is identified by the numeral **120**. ASIC **120** comprises a central processor unit interface **122** member which is coupled to the central processor unit bus by CPU bus link **124** which extends from ASIC **120**. Also coupled to the CPU bus link **124** is dynamic random access memory (DRAM) timing element **126**, which provides network controller **40** with timing signals for the DRAM member **98** illustrated in FIG. **4** when memory refresh of the DRAM **98** is indicated. DRAM timing element **126** is also coupled exteriorly to the ASIC **120** to DRAM member **98** by DRAM link **127**.

Central processing unit interface **122** is coupled to asynchronous signal processing element **128** by signal path **130**. Asynchronous signal processing element **128** comprises a baud rate generator cooperative with a universal asynchronous receiver-transmitter.

Also coupled to central processing unit interface **122** is network clock and control member **132** which comprises a programmable network clock generator which can be selectively programmed to generate an optional clock speed for a network to be coupled through RS485 interfaces **82** and **90** seen in FIG. **4**. Network clock and control member **132** also provides detection means for detections of failure conditions on a linked network and provides control signals to system components in response thereto, including interrupt signals to programmable interrupt coordinator circuitry included in central processing interface **122**. Network clock and controller member **132** provides data encoding by the FM0 standard, then the encoded data may be operated upon by RS485 interfaces **82** and **84** and transmitted and received by single twisted pair means to multiple serially networked

base transceiver units exemplified by base transceiver units 52A, 52B, and 52C illustrated in FIG. 3.

Keyboard controller element 134 is coupled to central processing unit interface and provides a link exterior to ASIC 120 to keyboard 31 (See FIG. 3).

FLASH memory/EEPROM logic control member 136 is coupled to central processing unit interface 122 and comprises control functions for FLASH memory element 100 and EEPROM memory element 102 of FIG. 3.

Central processing unit interface 122 is also coupled by line 138 to latches exterior to ASIC 120.

It is to be understood that the base transceiver units 52A, 52B, and 52C illustrated in FIG. 3 are communicative with mobile transceiver units by electromagnetic radio means. The mobile transceiver units may be associated with bar code scanning devices such as the NORAND® 20/20 High Performance Bar Code Reader whereby the scanning devices scan an object having a bar code associated therewith and collect information stored in the bar code, which information is then transmitted through the mobile transceiver units to base transceiver units such as base transceiver units 52A, 52B, and 52C or base transceiver unit 54 of FIG. 3. The bar code data received by said base transceiver units is then transmitted, in the example of FIG. 3, over network 50 by base transceiver units 52A, 52B, or 52C, or over link 53 by base transceiver unit 54, to network controller 40 which performs the routing and delivery of the data to the stationary data processor, or processors, such as shown for example, by host 42 of FIG. 3.

Description of FIGS. 7 through 11

FIG. 7 shows a block diagram of a particularly preferred intelligent base transceiver unit known as the RB4000. It will be observed that the components correspond with components of the network controller of FIG. 4, and similar reference numerals (preceded by 7-) have been applied in FIG. 7. Thus, the significance of components 7-70 through 7-73, 7-76, 7-82, 7-96, 7-98, 7-100 and 7-104 will be apparent from the preceding description with respect to FIG. 4 and 6, for example. I/O bus 700 may be coupled with a spread spectrum transmission (SST) or ultra high frequency (UHF) transceiver 701 which may correspond with any of the transceivers of units 52A, 52B, 52C or 54 previously referred to. The network controller 70 could have a similar RF transceiver coupled with its data port 72 or 73 and controlled via input/output bus 400, e.g. for direct RF coupling with router transceivers such as 901, 901, FIG. 9.

Referring to FIG. 8, a network controller 40 is shown with port 71 configured for interface with a host port type SNA V.35 56K/64K bits per second. Port 72 is shown as configured for communication with a personal computer of the PS/2 type operating asynchronously at 38.4K bits per second. Port 74 is coupled with a modem 8-60 providing for remote diagnostics and reprogramming of the network controller 40.

Port 73 of network controller 40 is shown as being connected with an adapter component 801 known as the MBA3000. A specification for the MBA3000 is found in APPENDIX A following this detailed description. In the operating mode indicated in FIG. 8, the adapter 801 serves to couple controller 40 sequentially with four radio base transceiver units such as indicated at 811 through 814. Component 811 is a commercially available radio base known as the RB3021 which utilizes features of Sojka U.S. Pat. No. 4,924,462 and of Mahany U.S. Pat. No. 4,910,794, both assigned to the present assignee, and the disclosures of which are hereby incorporated herein by reference in their entirety. Base station 811 may communicate with a multiplicity of hand-held RF data terminals such as indicated at 821. Details concerning base transceiver units 812 and 813, 814 are found in the attached APPENDICES B and C, respectively. Base 814 is indicated as being coupled with the adaptor 801 via RF broadband modems 831 and 832. Base units 813 and 814 may communicate with a variety of mobile transceiver units such as those indicated at 833, 834 and 1001, the first two being particularly described in APPENDICES D and E.

FIG. 9 shows two network controllers 40A and 40B each with its host ports configured as with the controller 40 of FIG. 8. In this example, the second ports 72 of the controllers 40A and 40B are configured for communication a relatively high data rate relatively along a distance network channel 56 which may have the characteristics of the serial channel 56 of FIG. 3, for example, an RS485 channel operating at 384 kilobits per second (384K bps). Network base transceivers 52A, 52B and 52C may correspond with the correspondingly numbered transceiver units of FIG. 3, for example, and the network may have additional network transceivers such as 52D which may support communication with the radio terminal 1001 for example. Furthermore, the network transceivers may have RF coupling with router transceiver units such as indicated at 901, 902 and 903. Router transceiver unit 902 is illustrated as a RB4000 intelligent transceiver such as represented in FIG. 7 and having its input/output bus 700 coupled with a peripheral.

FIG. 10 is entirely similar to FIG. 9, for example, except that ports 72 of the controllers 40A and 40B are coupled with separate serial type high data rate network channels, and ports 73 of the respective network controllers are coupled to a very high speed network e.g. in the megabit per second range such as an Ethernet local area network 1000. Suitable interfaces are indicated at 1001 and 1002.

FIG. 11 is entirely similar to FIG. 9 except that the ports 73 of the network controllers 40A and 40B are coupled with respective local area ring type networks which may be separate from each other and each have two or more hosts such as represented in FIG. 9 associated with the respective ring networks such as token rings 1100A and 1100B. Suitable interface means are indicated at 1101 and 1102.

Description of FIG. 12

FIG. 12 shows, for example, two network controllers 40A and 40B, each with two host computer units such as 42-1A. Host 42-2A is shown with a printer or other peripheral P1 which may generate bar codes, for example, for replacement of damaged bar codes or the like. Another printer P2 is shown associated with base 52C, again for example, for producing bar code labels where those are needed in the vicinity of a base station. In a large warehouse, relatively large distances may be involved for a worker to return to a printer such as P1 to obtain a new bar code label. Thus, it may be very advantageous to provide a printer P2 at the base station 52C which may be relatively close to a processing location which requires printed labels, e.g. a processing location in the vicinity of hand-held terminal 12-2 in FIG. 12. A base 52F may have a peripheral P3 associated therewith such as a large screen display, a printer or the like which may supplement the capabilities of a hand-held terminal, for example printing out new bar code labels at a convenient location, or providing a full screen display, rather than the more limited screen display area of the hand-held terminal 12-2.

If, for example, a base radio 52D which might be located at the ceiling level of a warehouse became inoperative at a time when qualified repair personnel were not immediately available, with the present system it would be feasible to

provide a substitute base radio or base radios, for example, as indicated at **52D1** located at table level or the like.

With the present system, the base radio stations do not necessarily forward data communications received from a given terminal to a particular host. For example, hand-held terminal **12-2** may request a path to printer **P2**, and such a path may be created via base stations **52D1** and **52C**. Station **52C** upon receipt of the message from terminal **12-2** would not transmit the message to a host but would, for example, produce the desired bar code label by means of printer **P2**. Further, terminal **12-2** may have provision for digitizing a voice message which might, for example, be addressed to terminal **12-1**. The system as illustrated would be operable to automatically establish a suitable path for example, via stations **52D1**, **52C**, **52B**, **52E** and **12-1** for the transmission of this voice message in digital form. Successive segments of such a voice message would be stored, for example, by the terminal **12-1**, and when the complete message was assembled, the segments would be synthesized into a continuous voice message for the user of terminal **12-1** e.g. by means of a speaker **1201** also useful for sending tone signals indicating valid bar code read, etc.

In accordance with the present invention, a hardware system such as illustrated in FIG. **12** may be physically laid out and then upon suitable command to one of the network controllers such as **42-2B**, the entire system would be progressively automatically self-configured for efficient operation. For example, controller **40B** could successively try its communications options with its output ports such as **71–73**, determining for example, that host processors were coupled with ports **71** and **72**, one operating on a 38.4 kilobit per second asynchronous basis and the other presenting a SNA port for the V.35 protocol at 64 kilobits per second. For example, one host, **42-1B** might be a main frame computer, while the other host **42-2B** might be a PS/2 type computer system. The controller **40B** having thus automatically configured itself so as to be compatible with the devices connected to ports **71** and **72**, could proceed to transmit via port **73** a suitable inquiry message to the network channel **56**. Each of the base stations could operate, for example, on a collision-sense multiple-access basis to respond to the inquiry message from the controller **40B**, until each of the successive bases on the network had responded and identified itself. Each base, for example, would have a respective unique address identification which it could transmit in response to the inquiry message so as to establish its presence on the network.

The controller **40B** could then transmit auto configure commands to the successive bases in turn, instructing the bases to determine what peripherals and router bases such as **52D1**, **52E** and **52F** were within the range of such base, and to report back to the controller. For example, bases such as **52C** and **52F** could determine the nature of peripherals **P2** and **P3** associated therewith so as to be able to respond to an inquiry from a terminal such as **12-2** to advise the terminal that a bar code printer, for example, was within direct RF range.

In the case of a breakdown of a component of the system such as **52D**, it would merely be necessary to place a router device such as **52D1** at a convenient location and activate the unit, whereupon the unit could send out its own broadcast inquiry which, for example, could be answered by the base stations **52C** and **52F**, station **52C** in turn, advising a relevant host or hosts of the activation of a substitute router station. Thus, the system is conveniently re-self-configured without the necessity for a technician familiar with the particular configuration procedure. As another example, where the base stations are operating utilizing spread spectrum transmission, the introduction of barriers (such as a new stack of inventory goods) to such transmission between a given base such as **52A** and various terminals, could result in the base **52A** contacting router base **52E**, for example, with a request to become active with respect to the blocked terminals.

Description of FIG. **13**

FIG. **13** shows an intelligent integrated controller and radio base unit **1300** which is integrated into a single housing or case **1301** corresponding to the case or housing **20** of FIG. **2**. The housing **1301** may be provided with an external antenna as diagrammatically indicated at **1302** with suitable RF coupling to the radio circuitry indicated at **1303**. Components **13-70** through **13-74**, **13-76**, **13-78**, **13-96**, **13-97**, **13-98**, **13-100**, and **13-102** may correspond with the correspondingly numbered components described with reference to FIG. **4**.

SUPPLEMENTARY DISCUSSION

In accordance with the present disclosure, a network controller, or integrated network controller and radio unit is coupled to one or more host computers via a standard interface such as commonly encountered in practice (e.g. RS232, V.35, Ethernet, token ring, FDDI, and so on). In this way, no specialized interface or adapter is required for the host.

Since the preferred network controller can connect to two hosts, if one host is detected to have failed, or in the event of a system crash, loss of a communication link, or the like, the network controller can automatically switch to the second host. The second host may be a truly redundant system, or may be a simpler computer of the PC type (a so-called personal computer) that can simply store transactions until the main host is restored. As another example, a single host may have a second port coupled to a second port of the controller especially if a communication link failure may be a problem. For example, two ports of the network controller may be coupled by separate modems with separate phone lines, leading to separate ports of a single mainframe computer, for example an IBM3090. In a fully redundant system, two ports of a network controller may be connected respectively to two mainframe computers such as the IBM3090.

The disclosed network controller can also connect one radio network to two hosts using RS232 or V.35 ports or to many hosts using a local area network such as Ethernet, token ring, or FDDI. A number of the disclosed network controllers (for example, up to thirty-two) can be connected together to interface many hosts to a single radio network. The hand-held portable terminals in such a network can then talk to any of the hosts they choose.

For example where one port of the disclosed network controller is coupled via its RS232 interface to a mainframe computer such as the IBM3090, another of its ports may be coupled via an FDDI network with a super computer e.g. the Cray X-MP. Then mobile and/or portable terminals can access either the main frame or the super computer, or in general, any of the hosts that are connected to the network controller.

As indicated in FIG. **9**, four hosts can be on one network. Referring to FIGS. **10** and **11**, a multiplicity of hosts may be coupled with each local area network so as to be in communication with one or more of the disclosed network controllers. Furthermore, a single disclosed network controller can control two radio networks such as the one

indicated at **50** in FIG. **3**. Where each network such as **50** is limited to thirty-two devices, the number of devices is doubled with the use of two radio networks. Two such radio networks may also be utilized for the sake of redundancy, with a provision for automatic switch-over from one radio network to the second if a problem develops on the first. Two radio networks may also facilitate the use of different radio technologies in one installation.

The various multi-drop local area networks referred to herein, for example at **7-82** in FIG. **7** and as represented at **56**, **56A**, **56B**, FIGS. **9** through **12**, and at **13-82** in FIG. **13** may comprise HDLC based local area networks operating at up to 2.5 megabits per second and using biphase space encoding (FM0) for clock recovery from data.

The components **86** and **94**, FIG. **4**, and component **13-11**, FIG. **13**, provides a low-cost base radio interface using three pairs of twisted conductors. One pair provides a bidirectional RS485 data line. Another pair is used for the clock and has an RS422 electrical configuration, and is one directional from the radio to the controller. The third twisted pair is also RS422 and is used to communicate from the controller to the radio transceiver to effect mode selection.

Since it is advantageous to operate the network and router RF transceiver units so as to be compatible with existing mobile data collection terminals such as shown in APPENDIX D1 et seq., a preferred mode of operation is based on the RTC protocol as disclosed in the aforementioned incorporated Mahany and Sojka patents and the following pending applications:

(1) U.S. Ser. No. 07/388,727 filed Aug. 4, 1989, now U.S. Pat. No. 5,070,536.

(2) European Published Patent Application EPO 353759 published Feb. 7, 1990.

(3) U.S. Ser. No. 07/485,313 filed Feb. 26, 1990, now abandoned.

The disclosures of applications (1), (2) and (3) are hereby incorporated herein by reference in their entirety.

An aspect of the invention resides in the provision of a network controller having port means selectively configurable for coupling in first mode with network RF transceiver units at a relatively high data rate such as 100 kilobits per second or higher, and for coupling in a second mode with network transceiver units at a relatively low data rate such as about twenty kilobits per second. Preferably a single port means such as **2**, **3** or **5**, **6**, FIG. **5**, can be software configured to interface selectively in the first mode or in the second mode. It is presently less expensive to use two connectors per port rather than a single 37-pin connector for example.

Where a network controller such as **40** operates two high data rate networks, for example, one network of RF base transceivers could operate with the RTC protocol, and the second network could operate according to a different protocol such as that disclosed in pending application Ser. No. 07/660,618 filed on or about Feb. 25, 1991, now abandoned, the disclosure of which being incorporated herein by reference in its entirety.

It will be apparent that many modifications and variations may be effected without departing from the scope of the teachings and concepts of the present disclosure.

Having described the invention, we claim:

1. In a data communication network having a plurality of mobile transceiver units selectively communicative with a plurality of base transceiver units, a method of automatically configuring the data communication network, executable by a network controller having a plurality of communication ports, comprising:

attempting communication on each of the plurality of communication ports;

determining what type of communication protocol is being utilized by devices or network channels connected to each of the plurality of communication ports;

automatically configuring the plurality of communication ports to be communicatively compatible, according to the determined communication protocol, with devices or network channels connected to each of the plurality of communication ports;

transmitting over a network channel connected to one of the plurality of communication ports an inquiry message to the plurality of base transceiver units;

receiving from the plurality of base transceiver units a response message indicating an identification of each of the plurality of base transceiver units;

transmitting to each of the plurality of base transceiver units auto-configure commands instructing the base transceiver units to determine what devices such as peripherals and router bases are within range of each of the plurality of base transceiver units; and

receiving from each of the plurality of base transceiver units a report of the devices such as peripherals and router bases that are within range of each of the plurality of base transceiver units.

2. In a data communication system comprising a plurality of mobile transceiver units selectively communicative with a plurality of base transceiver units, a control system comprising:

switching circuitry that supports communication among the plurality of mobile transceiver units via the plurality of base transceiver units;

a plurality of host computers coupling with the switching circuitry; and

the switching circuitry selectively enables communication between the plurality of host computers and the plurality of mobile transceiver units.

3. The control system of claim **2**, wherein communication between the plurality of host computers and the plurality of mobile transceiver units is selectively enabled to support redundancy.

4. The control system of claim **2**, wherein communication between the plurality of host computers and the plurality of mobile transceiver units is selectively enabled in response to detected failure of one of the plurality of host computers.

5. The control system of claim **2**, wherein the switching circuitry comprises at least one network controller, and wherein the plurality of host computers communicate with the plurality of base transceivers through multiple communication ports of the at least one network controller.

6. The control system of claim **5**, wherein the multiple communication ports of the at least one network controller are automatically configured by the at least one network controller to be compatible with each of the plurality of host computers.

7. A data communication system comprising:

a first wireless transceiver that participates on a first wireless channel to support communication within a cell;

a first plurality of wireless devices that participate on the first wireless channel;

a second wireless transceiver that participates on a second wireless channel to support communication within the cell;

a second plurality of wireless devices that participate on the second wireless channel;

the first and second wireless channels being communicatively incompatible with one another; and

a control circuit, communicatively coupled to both the first and second wireless transceivers, that supports communication among the first and second pluralities of wireless devices.

8. The data communication system of claim **7** wherein the first wireless channel supports a different radio technology from that supported by the second wireless channel.

9. The data communication system of claim **7** at least one of the first plurality of wireless devices roams through the cell.

10. The data communication system of claim **7** further comprising a wired link and a computing device, and the control circuit communicatively couples the computing device with the first and second pluralities of wireless devices via the wired link.

11. The data communication system of claim **10** wherein the wired link comprises a wired network.

12. The data communication system of claim **10** further comprising a redundant computing device coupled to the control circuit.

13. The data communication system of claim **7** comprising a third wireless transceiver that participates on a third wireless channel to support communication outside of the cell.

14. The data communication system of claim **12** further comprising a remote wireless device, and the third wireless transceiver participates to support longer distance communication with the remote wireless device than that supported by the first and second wireless transceivers with the first and second pluralities of wireless devices within the cell.

* * * * *

Exhibit C

US005740366A

United States Patent [19]

Mahany et al.

[11] Patent Number: 5,740,366

[45] Date of Patent: Apr. 14, 1998

[54] **COMMUNICATION NETWORK HAVING A PLURALITY OF BRIDGING NODES WHICH TRANSMIT A BEACON TO TERMINAL NODES IN POWER SAVING STATE THAT IT HAS MESSAGES AWAITING DELIVERY**

[75] Inventors: **Ronald L. Mahany**; **Robert C. Meier**, both of Cedar Rapids; **Ronald E. Luse**, Marion, all of Iowa

[73] Assignee: **Norand Corporation**, Cedar Rapids, Iowa

[21] Appl. No.: **395,555**

[22] Filed: **Feb. 28, 1995**

Related U.S. Application Data

[63] Continuation of Ser. No. 255,848, Jun. 8, 1994, Pat. No. 5,394,436, which is a continuation of Ser. No. 970,411, Nov. 2, 1992, abandoned, which is a continuation-in-part of Ser. No. 968,990, Oct. 30, 1992, abandoned, which is a continuation-in-part of Ser. No. 769,825, Oct. 1, 1991, abandoned, and a continuation-in-part of PCT/US92/08610, Oct. 1, 1992.

[51] **Int. Cl.**[6] **G06F 13/00**

[52] **U.S. Cl.** **395/200.12**; 395/684; 395/750; 395/838; 395/866; 340/825.47; 455/49.1; 455/53.1; 455/54.2

[58] **Field of Search** 340/825.47; 379/74, 379/88, 84, 33, 67; 367/77; 455/54.2

[56] **References Cited**

U.S. PATENT DOCUMENTS

3,781,815	12/1973	Boudreau et al.	340/172.5
4,369,443	1/1983	Giallanza et al.	340/825.47
4,644,532	2/1987	George et al.	370/94
4,663,706	5/1987	Allen et al.	395/200.13
4,689,786	8/1987	Sidhu et al.	370/94
4,725,992	2/1988	McNatt et al.	367/77
4,747,126	5/1988	Hood et al.	379/74
4,789,983	12/1988	Acampora et al.	370/96
4,864,559	9/1989	Perlman	370/60
4,916,726	4/1990	Motley, Jr. et al.	379/88
4,926,064	5/1990	Tapang	307/201
4,940,974	7/1990	Soka	340/825.08
4,942,552	7/1990	Merrill et al.	368/900
5,018,133	5/1991	Tsukakoshi et al.	370/16
5,027,427	6/1991	Shimizu	455/54.2
5,029,183	7/1991	Tymes	375/1
5,056,085	10/1991	Vu	370/60
5,099,509	3/1992	Morganstein et al.	379/84
5,103,461	4/1992	Tymes	375/1
5,128,938	7/1992	Borras	370/95.1
5,150,360	9/1992	Perlman et al.	370/94.3
5,163,080	11/1992	Amonoso et al.	379/33
5,241,542	8/1993	Natarajan et al.	370/95.3
5,260,990	11/1993	McLampy et al.	379/67
5,276,680	1/1994	Messenger	370/85.1
5,280,650	1/1994	Sobti	370/343
5,283,568	2/1994	Asai et al.	340/825.44
5,291,479	3/1994	Vazirani et al.	370/58.2
5,425,051	6/1995	Mahany	375/202

Primary Examiner—Thomas C. Lee
Assistant Examiner—Po C. Huang
Attorney, Agent, or Firm—Stanford & Bennett L.L.P.

[57] **ABSTRACT**

An apparatus and a method for routing data in a radio data communication system having one or more host computers, one or more intermediate base stations, and one or more RF terminals organizes the intermediate base stations into an optimal spanning-tree network to control the routing of data to and from the RF terminals and the host computer efficiently and dynamically. Communication between the host computer and the RF terminals is achieved by using the network of intermediate base stations to transmit the data.

32 Claims, 2 Drawing Sheets

Microfiche Appendix Included
(10 Microfiche, 602 Pages)

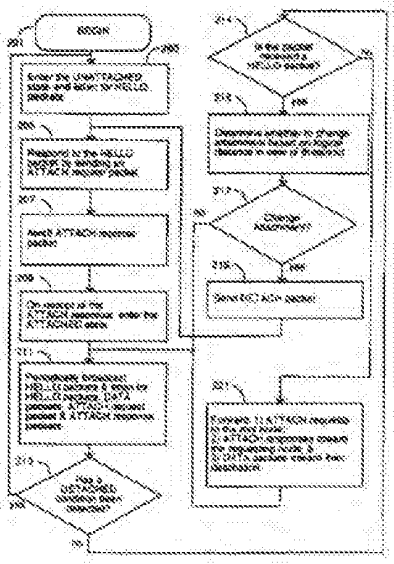

FIG. 1

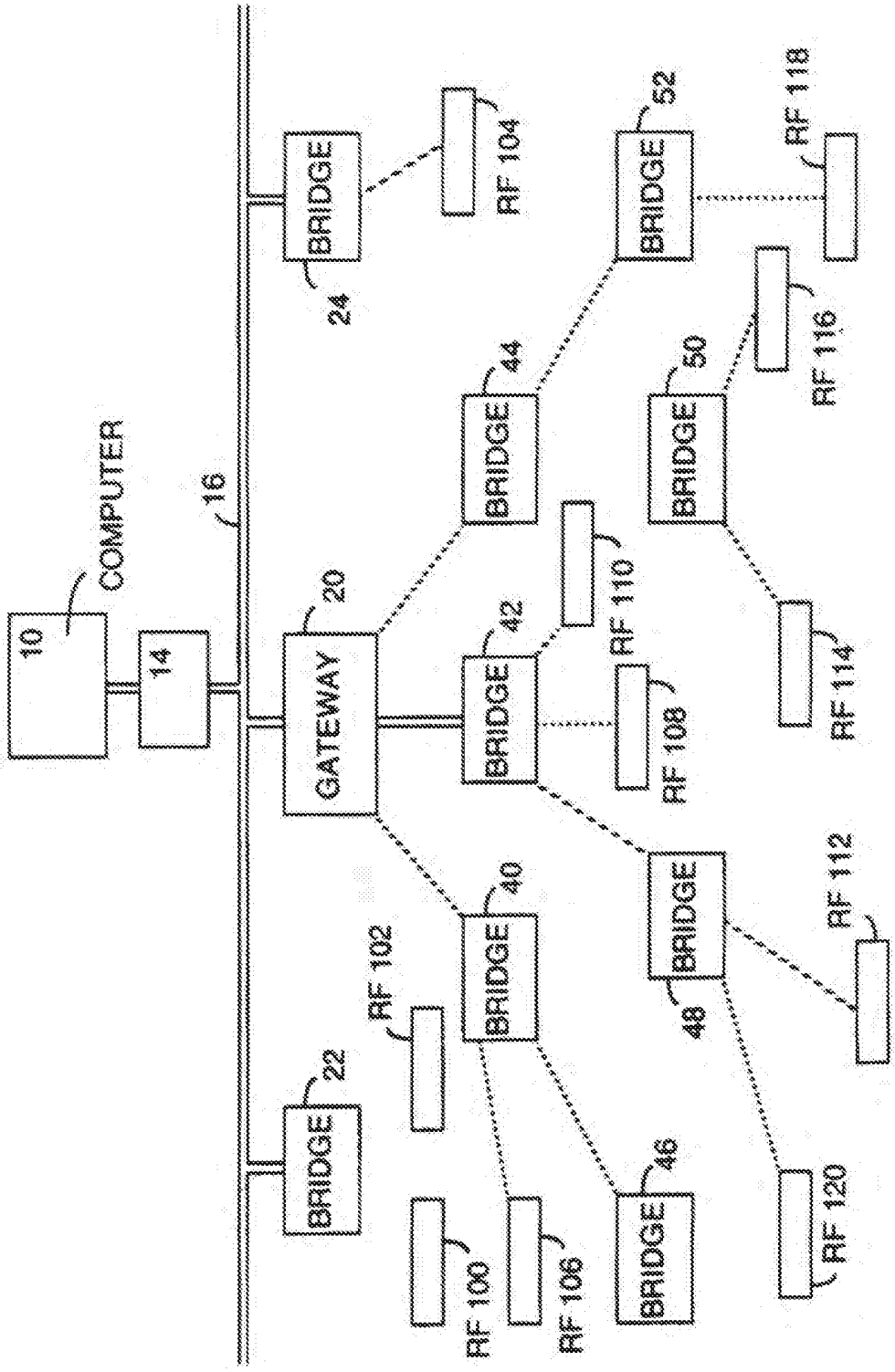
COMPUTER
10
14
16
GATEWAY
20
BRIDGE
22
BRIDGE
24
BRIDGE
40
BRIDGE
42
BRIDGE
44
BRIDGE
46
BRIDGE
48
BRIDGE
50
BRIDGE
52
RF 100
RF 102
RF 104
RF 106
RF 108
RF 110
RF 112
RF 114
RF 116
RF 118
RF 120

FIG. 2

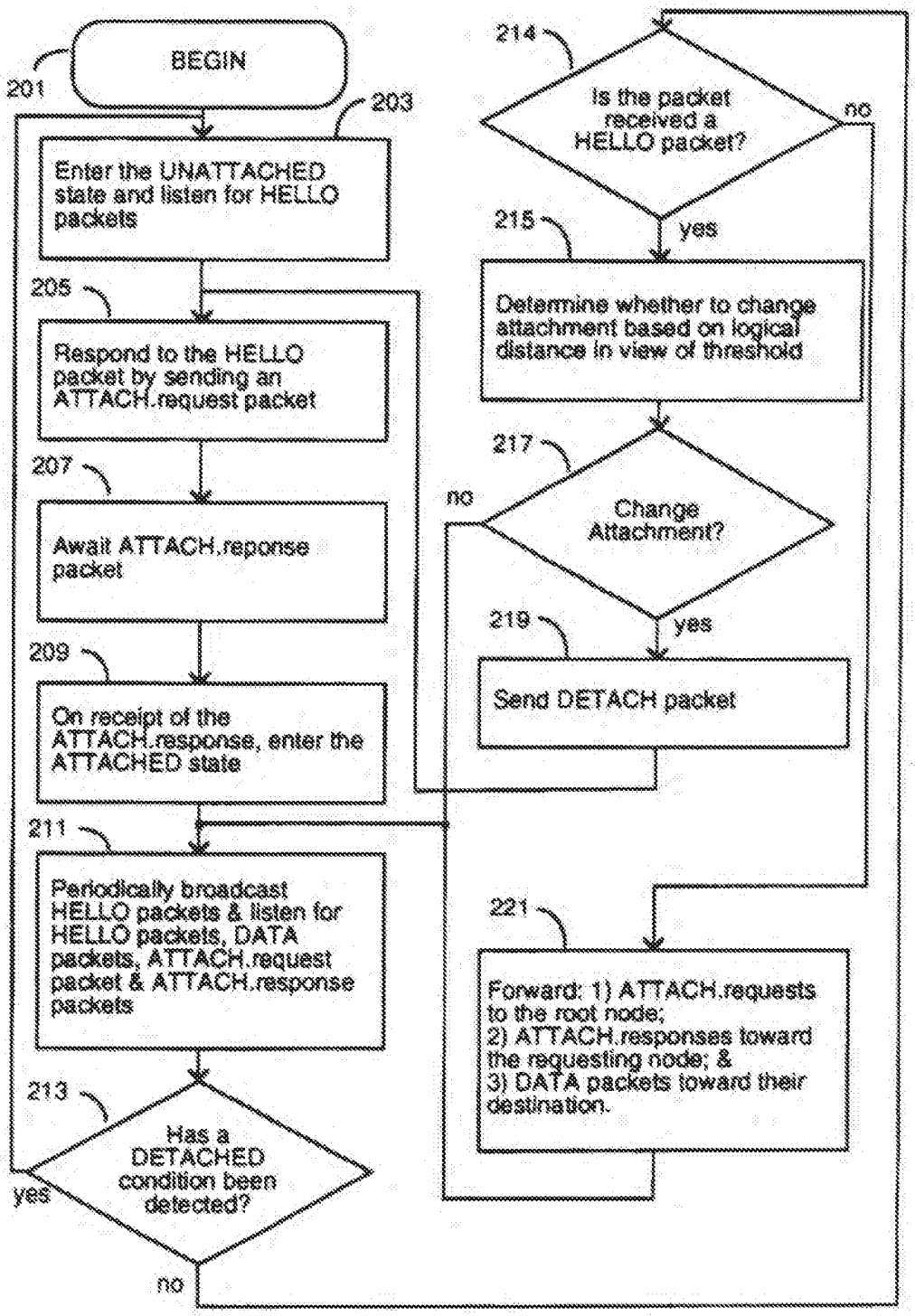
BEGIN
201
203
Enter the UNATTACHED state and listen for HELLO packets
205
Respond to the HELLO packet by sending an ATTACH.request packet
207
Await ATTACH.reponse packet
209
On receipt of the ATTACH.response, enter the ATTACHED state
211
Periodically broadcast HELLO packets & listen for HELLO packets, DATA packets, ATTACH.request packet & ATTACH.response packets
213
Has a DETACHED condition been detected?
yes
no
214
Is the packet received a HELLO packet?
no
yes
215
Determine whether to change attachment based on logical distance in view of threshold
217
Change Attachment?
no
yes
219
Send DETACH packet
221
Forward: 1) ATTACH.requests to the root node;
2) ATTACH.responses toward the requesting node; &
3) DATA packets toward their destination.

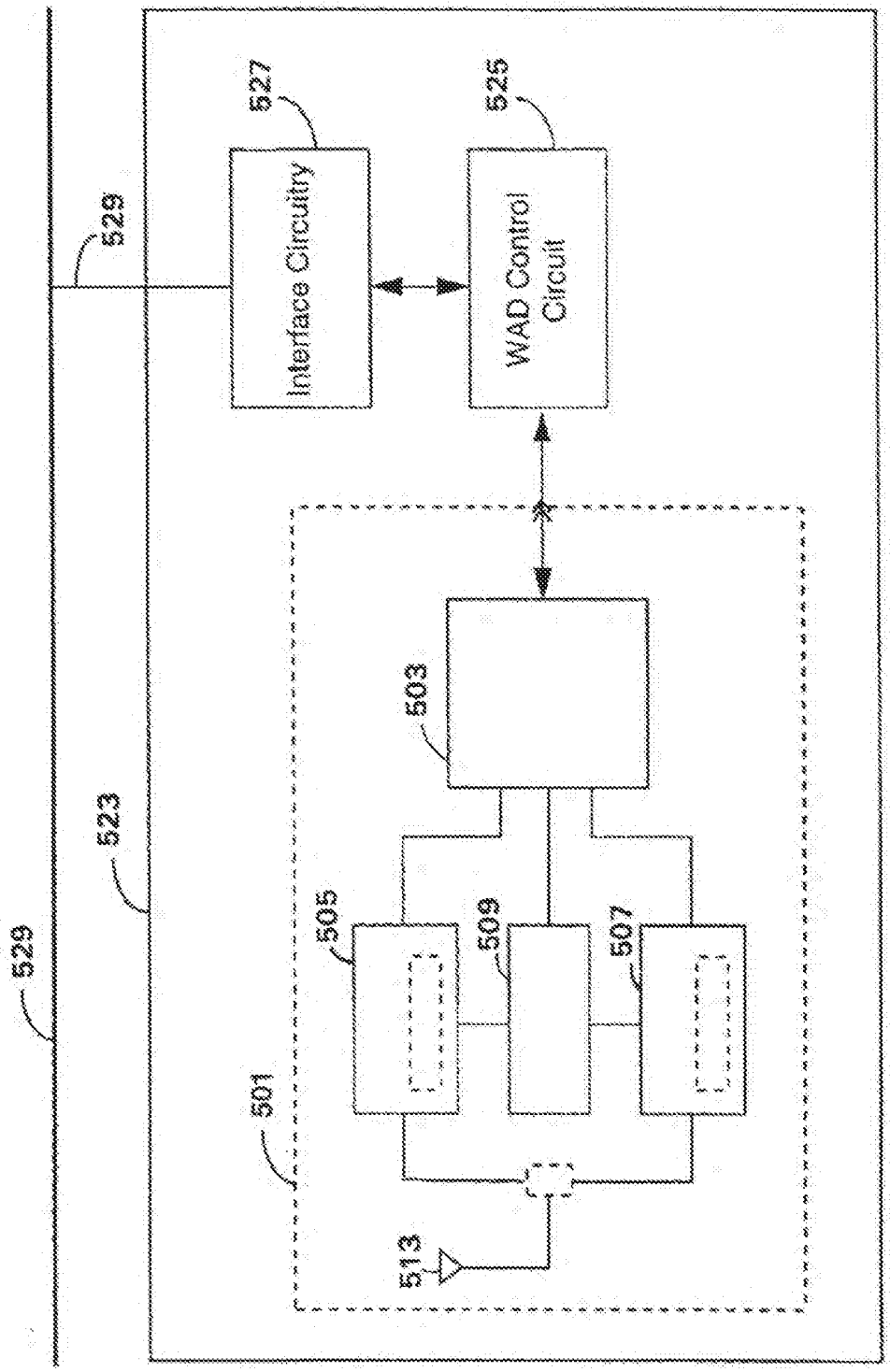
529
527
Interface Circuitry
525
WAD Control Circuit
529
523
503
505
509
507
501
513

FIG. 1D

COMMUNICATION NETWORK HAVING A PLURALITY OF BRIDGING NODES WHICH TRANSMIT A BEACON TO TERMINAL NODES IN POWER SAVING STATE THAT IT HAS MESSAGES AWAITING DELIVERY

CROSS-REFERENCE TO RELATED APPLICATIONS

The present case is a continuation of U.S. Ser. No. 08/255,848 filed Jun. 8, 1994 by Meier et al., now U.S. Pat. No. 5,394,436, which is a continuation of U.S. Ser. No. 07/970,411, filed Nov. 2, 1992 by Meier et al., now abandoned, which is a continuation in part of U.S. Ser. No. 07/968,990, filed Oct. 30, 1992, now abandoned, which is itself a continuation in part of a application of Meier et al., U.S. Ser. No. 07/769,425, filed Oct. 1, 1992, now abandoned. The application U.S. Ser. No. 07/968,990, now abandoned, is also a continuation in part of pending PCT application of Mahany et al., Ser. No. PCT/US92/08610, filed Oct. 1, 1992.

The entire disclosures of each of these pending applications including the drawings and appendices are incorporated herein by reference as if set forth fully in this application.

Appendix B is a microfiche appendix containing a list of the program modules (also included as Appendix A) and the program modules themselves which comprise an exemplary computer program listing of the source code used by the network controllers and intelligent base transceivers of the present invention. The microfiche appendix has ten (10) total microfiche sheets and six hundred two (602) total flames.

BACKGROUND OF THE INVENTION

In a typical radio data communication system having one or more host computers and multiple RF terminals, communication between a host computer and an RF terminal is provided by one or more base stations. Depending upon the application and the operating conditions, a large number of these base stations may be required to adequately serve the system. For example, a radio data communication system installed in a large factory may require dozens of base stations in order to cover the entire factory floor.

In earlier RF (Radio Frequency) data communication systems, the base stations were typically connected directly to a host computer through multi-dropped connections to an Ethernet communication line. To communicate between an RF terminal and a host computer, in such a system, the RF terminal sends data to a base station and the base station passes the data directly to the host computer. Communicating with a host computer through a base station in this manner is commonly known as hopping. These earlier RF data communication systems used a single-hop method of communication.

In order to cover a larger area with an RF data communication system and to take advantage of the deregulation of the spread-spectrum radio frequencies, later-developed RF data communication systems are organized into layers of base stations. As in earlier RF data communications systems, a typical system includes multiple base stations which communicate directly with the RF terminals and the host computer. In addition, the system also includes intermediate stations that communicate with the RF terminals, the multiple base stations, and other intermediate stations. In such a system, communication from an RF terminal to a host computer may be achieved, for example, by having the RF terminal send data to an intermediate station, the intermediate station send the data to a base station, and the base station send the data directly to the host computer. Communicating with a host computer through more than one station is commonly known as a multiple-hop communication system.

Difficulties often arise in maintaining the integrity of such multiple-hop RF data communication systems. The system must be able to handle both wireless and hard-wired station connections, efficient dynamic routing of data information, RF terminal mobility, and interference from many different sources.

SUMMARY OF THE INVENTION

The present invention solves many of the problems inherent in a multiple-hop data communication system. The present invention comprises an RF Local-Area Network capable of efficient and dynamic handling of data by routing communications between the RF Terminals and the host computer through a network of intermediate base stations.

In one embodiment of the present invention, the RF data communication system contains one or more host computers and multiple gateways, bridges, and RF terminals. Gateways are used to pass messages to and from a host computer and the RF Network. A host port is used to provide a link between the gateway and the host computer. In addition, gateways may include bridging functions and may pass information from one RF terminal to another. Bridges are intermediate relay nodes which repeat data messages. Bridges can repeat data to and from bridges, gateways and RF terminals and are used to extend the range of the gateways.

The RF terminals are attached logically to the host computer and use a network formed by a gateway and the bridges to communicate with the host computer. To set up the network, an optimal configuration for conducting network communication spanning tree is created to control the flow of data communication. To aid understanding by providing a more visual description, this configuration is referred to hereafter as a "spanning tree" or "optimal spanning tree".

Specifically, root of the spanning tree are the gateways; the branches are the bridges; and non-bridging stations, such as RF terminals, are the leaves of the tree. Data are sent along the branches of the newly created optimal spanning tree. Nodes in the network use a backward learning technique to route packets along the correct branches.

One object of the present invention is to route data efficiently, dynamically, and without looping. Another object of the present invention is to make the routing of the data transparent to the RF terminals. The RF terminals, transmitting data intended for the host computer, are unaffected by the means ultimately used by the RF Network to deliver their data.

It is a further object of the present invention for the network to be capable of handling RF terminal mobility and lost nodes with minimal impact on the entire RF data communication system.

BRIEF DESCRIPTION OF THE DRAWINGS

FIG. 1 is a functional block diagram of an RF data communication system incorporating the RF local-area network of the present invention.

FIG. 2 is a flow diagram illustrating a bridging node's construction and maintenance of the spanning tree.

DETAILED DESCRIPTION OF THE INVENTION

FIG. 1 is a functional block diagram of an RF data communication system. In one embodiment of the present

invention, the RF data communication system has a host computer **10**, a network controller **14** and bridges **22** and **24** attached to a data communication link **16**. Also attached to the data communication link **16** is a gateway **20** which acts as the root node for the spanning tree of the RF data network of the present invention. A bridge **42** is attached to the gateway **20** through a hard-wired communication link and bridges **40** and **44** are logically attached to gateway **20** by two independent RF links. Additional bridges **46**, **48**, **50** and **52** are also connected to the RF Network and are shown in the FIG. 1. Note that, although shown separate from the host computer **10**, the gateway **20** (the spanning tree root node) may be part of host computer **10**.

The FIG. 1 further shows RF terminals **100** and **102** attached to bridge **22** via RF links and RF terminal **104** attached to bridge **24** via an RF link. Also, RF terminals **106**, **108**, **110**, **112**, **114**, **116**, **118**, and **120** can be seen logically attached to the RF Network through their respective RF links. The RF terminals in FIG. 1 are representative of non-bridging stations. In alternate embodiments of the present invention, the RF Network could contain any type of device capable of supporting the functions needed to communicate in the RF Network such as hard-wired terminals, remote printers, stationary bar code scanners, or the like. The RF data communication system, as shown in FIG. 1, represents the configuration of the system at a discrete moment in time after the initialization of the system. The RF links, as shown, are dynamic and subject to change. For example, changes in the structure of the RF data communication system can be caused by movement of the RF terminals and by interference that affects the RF communication links.

In the preferred embodiment, the host computer **10** is an IBM 3090, the network controller **14** is a model RC3250 of the Norand Corporation, the data communication link **16** is an Ethernet link, the nodes **20**, **22**, **24**, **40**, **42**, **44**, **46**, **48**, **50** and **52** are intelligent base transceiver units of the type RB4000 of the Norand Corporation, and the RF terminals **100**, **102**, **104**, **106**, **108**, **110**, **112**, **114**, **116**, **118** and **120** are of type RT1100 of the Norand Corporation.

The optimal spanning tree, which provides the data pathways throughout the communication system, is stored and maintained by the network as a whole. Each node in the network stores and modifies information which specifies how local communication traffic should flow. Optimal spanning trees assure efficient, adaptive (dynamic) routing of information without looping.

To initialize the RF data communication system, the gateway **20** and the other nodes are organized into an optimal spanning tree rooted at the gateway **20**. To form the optimal spanning tree, in the preferred embodiment the gateway **20** is assigned a status of ATTACHED and all other bridges are assigned the status UNATTACHED. The gateway **20** is considered attached to the spanning tree because it is the root node. Initially, all other bridges are unattached and lack a parent in the spanning tree. At this point, the attached gateway node **20** periodically broadcasts a specific type of polling packet referred to hereafter as "HELLO packets". The HELLO packets can be broadcast using known methods of communicating via radio frequency (RF) link or via a direct wire link. In the preferred embodiment of the present invention, the RF link is comprised of spread-spectrum transmissions using a polling protocol. Although a polling protocol is preferred, a carrier-sense multiple-access (CSMA), busy-tone, or any other protocol might also manage the communication traffic on the RF link.

HELLO packets contain 1) the address of the sender, 2) the hopping distance that the sender is from the root, 3) a source address, 4) a count of nodes in the subtree which flow through that bridge, and 5) a list of system parameters. Each node in the network is assigned a unique network service address and a node-type identifier to distinguish between different nodes and different node types. The distance of a node from the root node is measured in hops times the bandwidth of each hop. The gateway root is considered to be zero hops away from itself.

FIG. 2 is a flow diagram illustrating a bridge's participation in the construction and maintenance of the spanning tree. At a block **201**, the bridge begins the local construction of the spanning tree upon power-up. Next, at a block **203**, the bridge enters the UNATTACHED state, listening for HELLO packets (also referred to as HELLO messages herein) that are broadcast.

By listening to the HELLO messages, bridges can learn which nodes are attached to the spanning tree. At a block **205**, the bridge responds to a HELLO packet received by sending an ATTACH.request packet to the device that sent the received HELLO packet. The ATTACH.request packet is thereafter forwarded towards and to the root node which responds by sending an ATTACH.response packet back down towards and to the bridge.

The bridge awaits the ATTACH.response packet at a block **207**. Upon receipt of the ATTACH.response packet, at a block **209**, the bridge enters an ATTACHED state. Thereafter, at a block **211**, the bridge begins periodically broadcasting HELLO packets and begins forwarding or relaying packets received. Specifically, between HELLO packet broadcasts, the bridge listens for HELLO, DATA, ATTACH.request and ATTACH.response packets broadcast by other devices in the communication network. Upon receiving such a packet, the bridge branches to a block **213**. At the block **213**, if the bridge detects that it has become detached from the spanning tree the bridge will branch back to the block **203** to establish attachment. Note that although the illustration in FIG. 2 places block **213** immediately after the block **211**, the bridges functionality illustrated in block **213** is actually distributed throughout the flow diagram.

If at the block **213** detachment has not occurred, at a block **214**, the bridge determines if the received packet is a HELLO packet. If so, the bridge analyzes the contents of the HELLO packet at a block **215** to determine whether to change its attachment point in the spanning tree. In a preferred embodiment, the bridge attempts to maintain attachment to the spanning tree at the node that is logically closest to the root node.

The logical distance, in a preferred embodiment, is based upon the number of hops needed to reach the root node and the bandwidth of those hops. The distance the attached node is away from the root node is found in the second field of the HELLO message that is broadcast. In another embodiment of the present invention, the bridges consider the number of nodes attached to the attached node as well as the logical distance of the attached node from the root node. If an attached node is overloaded with other attached nodes, the unattached bridge may request attachment to the less loaded node, or to a more loaded node as described above in networks having regions of substantial RF overlap. In yet another embodiment, to avoid instability in the spanning tree, the bridge would only conclude to change attachment if the logical distance of the potential replacement is greater than a threshold value.

If no change in attachment is concluded, at a block **217** the bridge branches back to the block **211**. If a determination is made to change attachment, a DETACH packet is sent to the

root as illustrated at a block **219**. After sending the DETACH packet, the bridge branches back to the block **205** to attach to the new spanning tree node. Note that the order of shown for detachment and attachment is only illustrative and can be reversed.

Referring back to the block **214**, if the received packet (at block **211**) is not a HELLO packet, the bridge branches to a block **221** to forward the received packet through the spanning tree. Afterwards, the bridge branches back to the block **211** to continue the process.

Specifically, once attached, the attached bridge begins broadcasting HELLO packets (at the block **211**) seeking to have all unattached bridges (or other network devices) attach to the attached bridge. Upon receiving an ATTACH.request packet, the bridge forwards that packet toward the root node (through the blocks **211**, **213**, **214** and **221**. On its path toward the root, each node records the necessary information of how to reach requesting bridge. This process is called "backward learning" herein, and is discussed more fully below. As a result of the backward learning, once the root node receives the ATTACH.request packet, an ATTACH-.response packet can be sent through the spanning tree to the bridge requesting attachment.

After attaching to an attached node, the newly attached bridge (the child) must determine its distance from the root node. To arrive at the distance of the child from the root node, the child adds the broadcast distance of its parent from the root node to the distance of the child from its parent. In the preferred embodiment, the distance of a child from its parent is based on the bandwidth of the data communication link. For example, if the child attaches to its parent via a hard-wired link (data rate 26,000 baud), then the distance of that communication link might equal, for example, one hop. However, if the child attaches to its parent via an RF link (data rate 9600 baud), then the distance of that communication link might correspondingly be equal 3 hops. The number of the hop corresponds directly to the communication speed of the link. This may not only take into consideration baud rate, but also such factors as channel interference.

Initially, only the root gateway node **20** is broadcasting HELLO messages and only nodes **40**, **42** and **44** are within range of the HELLO messages broadcast by the gateway. Therefore, after the listening period has expired, nodes **40**, **42** and **44** request attachment to the gateway node **20**. The unattached nodes **40**, **42**, and **44** send ATTACH.request packets and the attached gateway node **20** acknowledges the ATTACH.request packets with local ATTACH.confirm packets. The newly attached bridges are assigned the status ATTACHED and begin broadcasting their own HELLO packets, looking for other unattached bridges. Again, the remaining unattached nodes attempt to attach to the attached nodes that are logically closest to the root node. For example, node **48** is within range of HELLO messages from both nodes **40** and **42**. However, node **40** is three hops, Via an RF link, away from the gateway root node **20** and node **42** is only one hop, via a hard-wired link, away from the gateway root node **20**. Therefore, node **48** attaches to node **42**, the closest node to the gateway root node **20**.

The sending of HELLO messages, ATTACH.request packets and ATTACH.confirm packets continues until the entire spanning tree is established. In addition, attached bridges may also respond to HELLO messages. If a HELLO message indicates that a much closer route to the root node is available, the attached bridge sends a DETACH packet to its old parent and an ATTACH.request packet to the closer

node. To avoid instability in the system and to avoid overloading any given node, an attached bridge would only respond to a HELLO message if the hop count in a HELLO packet is greater than a certain threshold value, CHANGE—THRESHOLD. In the preferred embodiment, the value of the CHANGE—THRESHOLD equals 3. In this manner, an optimal spanning tree is formed that is capable of transmitting data without looping.

Nodes, other than the gateway root node, after acknowledging an ATTACH.request packet from a previously unattached node, will send the ATTACH.request packet up the branches of the spanning tree to the gateway root node. As the ATTACH.request packet is being sent to the gateway root node, other nodes attached on the same branch record the destination of the newly attached node in their routing entry table. When the ATTACH.request packet reaches the gateway root node, the gateway root node returns an end-to-end ATTACH.confirm packet.

After the spanning tree is initialized, the RF terminals listen for periodically broadcasted Hello packets to determine which attached nodes are in range. After receiving HELLO messages from attached nodes, an RF terminal responding to an appropriate poll sends an ATTACH.request packet to attach to the node logically closest to the root. For example, RF terminal **110** is physically closer to node **44**. However, node **44** is three hops, via an RF link, away from the gateway root node **20** and node **42** is only one hop, via a hard-wired link, away from the gateway root node **20**. Therefore, RF terminal **110**, after hearing HELLO messages from both nodes **42** and **44**, attaches to node **42**, the closest node to the gateway root node **20**. Similarly, RF terminal **114** hears HELLO messages from nodes **48** and **50**. Nodes **48** and **50** are both four hops away from the gateway root node **20**. However, node **48** has two RF terminals **110** and **112** already attached to it while node **50** has only one RF terminal **116** attached to it. Therefore, RF terminal **114** will attach to node **50**, the least busy node of equal distance to the gateway root node **20**. Attaching to the least busy node proves to be the most efficient practice when the communication system has little overlap in the RF communication regions. In another embodiment, however, instead of attaching to the least busy node of equal distance to the gateway root node **20**, the attachment is established with the busiest node.

The attached node acknowledges the ATTACH.request and sends the ATTACH.request packet to the gateway root node. Then, the gateway root node returns an end-to-end ATTACH.confirm packet. In this manner, the end-to-end ATTACH.request functions as a discovery packet enabling the gateway root node, and all other nodes along the same branch, to learn the address of the RF terminal quickly. This process is called backward learning. Nodes learn the addresses of terminals by monitoring the traffic from terminals to the root. If a packet arrives from a terminal that is not contained in the routing table of the node, an entry is made in the routing table. The entry includes the terminal address and the address of the node that sent the packet. In addition, an entry timer is set for that terminal. The entry timer is used to determine when RF terminals are actively using the attached node. Nodes maintain entries only for terminals that are actively using the node for communication. If the entry timer expires due to lack of communication, the RF terminal entry is purged from the routing table.

The RF links among the RF terminals, the bridges, and the gateway are often lost. Therefore, a connection-oriented data-link service is used to maintain the logical node-to-node links. In the absence of network traffic, periodic

messages are sent and received to ensure the stability of the RF link. As a result, the loss of a link is quickly detected and the RF Network can attempt to establish a new RF link before data transmission from the host computer to an RF terminal is adversely affected.

Communication between terminals and the host computer is accomplished by using the resulting RF Network. To communicate with the host computer, an RF terminal sends a data packet in response to a poll from the bridge closest to the host computer. Typically, the RF terminal is attached to the bridge closest to the host computer. However, RF terminals are constantly listening for HELLO and polling messages from other bridges and may attach to, and then communicate with, a bridge in the table of bridges that is closer to the particular RF terminal.

Under certain operating conditions, duplicate data packets can be transmitted in the RF Network. For example, it is possible for an RF terminal to transmit a data packet to its attached node, for the node to transmit the acknowledgement frame, and for the RF terminal not to receive the acknowledgement. Under such circumstances, the RF terminal will retransmit the data. If the duplicate data packet is updated into the database of the host computer, the database would become corrupt. Therefore, the RF Network of the present invention detects duplicate data packets. To ensure data integrity, each set of data transmissions receives a sequence number. The sequence numbers are continuously incremented, and duplicate sequence numbers are not accepted.

When a bridge receives a data packet from a terminal directed to the host computer, the bridge forwards the data packet to the parent node on the branch. The parent node then forwards the data packet to its parent node. The forwarding of the data packet continues until the gateway root node receives the data packet and sends it to the host computer. Similarly, when a packet arrives at a node from the host computer directed to an RF terminal, the node checks its routing entry table and forwards the data packet to its child node which is along the branch destined for the RF terminal. It is not necessary for the nodes along the branch containing the RF terminal to know the ultimate location of the RF terminal. The forwarding of the data packet continues until the data packet reaches the final node on the branch, which then forwards the data packet directly to the terminal itself.

Communication is also possible between RF terminals. To communicate with another RF terminal, the RF terminal sends a data packet to its attached bridge. When the bridge receives the data packet from a terminal directed to the host computer, the bridge checks to see if the destination address of the RF terminal is located within its routing table. If it is, the bridge simply sends the message to the intended RF terminal. If not, the bridge forwards the data packet to its parent node. The forwarding of the data packet up the branch continues until a common parent between the RF terminals is found. Then, the common parent (often the gateway node itself) sends the data packet to the intended RF terminal via the branches of the RF Network.

During the normal operation of the RF Network, RF terminals can become lost or unattached to their attached node. If an RF terminal becomes unattached, for whatever reason, its routing entry is purged and the RF terminal listens for HELLO or polling messages from any attached nodes in range. After receiving HELLO or polling messages from attached nodes, the RF terminal sends an ATTACH.request packet to the attached node closest to the root. That attached node acknowledges the ATTACH.request and sends the ATTACH.request packet onto the gateway root node. Then, the gateway root node returns an end-to-end ATTACH.confirm packet.

Bridges can also become lost or unattached during normal operations of the RF Network. If a bridge becomes lost or unattached, all routing entries containing the bridge are purged. The bridge then broadcasts a HELLO.request with a global bridge destination address. Attached nodes will broadcast HELLO packets immediately if they receive an ATTACH.request packet with a global destination address. This helps the lost node re-attach. Then, the bridge enters the LISTEN state to learn which attached nodes are within range. The unattached bridge analyzes the contents of broadcast HELLO messages to determine whether to request attachment to the broadcasting node. Again, the bridge attempts to attach to the node that is logically closest to the root node. After attaching to the closest node, the bridge begins broadcasting HELLO messages to solicit ATTACH.requests from other nodes or RF terminals.

The spread-spectrum system provides a hierarchical radio frequency network of on-line terminals for data entry and message transfer in a mobile environment. The network is characterized by sporadic data traffic over multiple-hop data paths consisting of RS485 or ethernet wired links and single-channel direct sequenced spread spectrum links. The network architecture is complicated by moving, hidden, and sleeping nodes. The spread spectrum system consists of the following types of devices:

Terminal controller—A gateway which passes messages from a host port to the RF network; and which passes messages from the network to the host port. The host port (directly or indirectly) provides a link between the controller and a "host" computer to which the terminals are logically attached.

Base station—An intermediate relay node which is used to extend the range of the controller node. Base station-to-controller or base station-to-base station links can be wired or wireless RF.

Terminal—Norand RF hand-held terminals, printers, etc. In addition, a controller device has a terminal component.

The devices are logically organized as nodes in an (optimal) spanning tree, with the controller at the root, internal nodes in base stations or controllers on branches of the tree, and terminal nodes as (possibly mobile) leaves on the tree. Like a sink tree, nodes closer to the root of the spanning tree are said to be "downstream" from nodes which are further away. Conversely, all nodes are "upstream" from the root. Packets are only sent along branches of the spanning tree. Nodes in the network use a "BACKWARD LEARNING" technique to route packets along the branches of the spanning tree.

Devices in the spanning tree are logically categorized as one of the following three node types:

1) Root (or root bridge)—A controller device which functions as the root bridge of the network spanning tree. In the preferred embodiment, the spanning tree has a single root node. Initially, all controllers are root candidates from which a root node is selected. This selection may be based on the hopping distance to the host, preset priority, random selection, etc.

2) Bridge—An internal node in the spanning tree which is used to "bridge" terminal nodes together into an interconnected network. The root node is also considered a bridge and the term "bridge" may be used to refer to all non-terminal nodes or all non-terminal nodes except

the root, depending on the context herein. A bridge node consists of a network interface function and a routing function.

3) Terminal—leaf node in the spanning tree. A terminal node can be viewed as the software entity that terminates a branch in the spanning tree.

A controller device contains a terminal node(s) and a bridge node. The bridge node is the root node if the controller is functioning as the root bridge. A base station contains a bridge node. A terminal device contains a terminal node and must have a network interface function. A "bridging entity" refers to a bridge node or to the network interface function in a terminal.

The basic requirements of the system are the following.

a) Wired or wireless node connections.

b) Network layer transparency.

c) Dynamic/automatic network routing configuration.

d) Terminal mobility. Terminals should be able to move about the RF network without losing an end-to-end connection.

e) Ability to accommodate sleeping terminals.

f) Ability to locate terminals quickly.

g) Built-in redundancy. Lost nodes should have minimal impact on the network.

h) Physical link independence. The bridging algorithm is consistent across heterogeneous physical links.

The software for the spread-spectrum system is functionally layered as follows.

Medium Access Control (MAC)

The MAC layer is responsible for providing reliable transmission between any two nodes in the network (i.e. terminal-to-bridge). The MAC has a channel access control component and a link control component. The link control component facilitates and regulates point-to-point frame transfers in the absence of collision detection. The MAC channel access control component regulates access to the network. Note that herein, the MAC layer is also referred to as the Data Link layer.

Bridging Layer

The bridging layer, which is also referred to herein as the network layer, has several functions as follows.

1. The bridging layer uses a "HELLO protocol" to organize nodes in the network into an optimal spanning tree rooted at the root bridge. The spanning tree is used to prevent loops in the topology. Interior branches of the spanning tree are relatively stable (i.e. controller and relay stations do not move often). Terminals, which are leaves on the spanning three, may become unattached, and must be reattached, frequently.

2. The bridging layer routes packets from terminals to the host, from the host to terminals, and from terminals to terminals along branches of the spanning tree.

3. The bridging layer provides a service for storing packets for SLEEPING terminals. Packets which cannot be delivered immediately can be saved by the bridging entity in a parent node for one or more HELLO times.

4. The bridging layer propagates lost node information throughout the spanning tree.

5. The bridging layer maintains the spanning tree links.

6. The bridging layer distributes network interface addresses.

Logical Link Control Layer

A logical link control layer, also known herein as the Transport layer herein, is responsible for providing reliable transmission between any two nodes in the network (i.e., terminal-to-base station). The data-link layer provides a connection-oriented reliable service and a connectionless unreliable service. The reliable service detects and discards duplicate packets and retransmits lost packets. The unreliable services provides a datagram facility for upper layer protocols which provide a reliable end-to-end data path. The data-link layer provides ISO layer 2 services for terminal-to-host application sessions which run on top of an end-to-end terminal-to-host transport protocol. However, the data-link layer provides transport (ISO layer 4) services for sessions contained within the SST network.

Higher Layers

For terminal-to-terminal sessions contained within the SST network, the data-link layer provides transport layer services and no additional network or transport layer is required. In this case, the MAC, bridging, and data-link layers discussed above can be viewed as a data-link layer, a network layer, and a transport layer, respectively. For terminal-to-host-application sessions, higher ISO layers exist on top of the SST data-link layer and must be implemented in the terminal and host computer, as required. This document does not define (or restrict) those layers. This document does discuss a fast-connect VMTP-like transport protocol which is used for transient internal terminal-to-terminal sessions.

Specifically, a network layer has several functions, as follows.

1) The network layer uses a "hello protocol" to organize nodes in the network into an optimal spanning tree rooted at the controller. (A spanning tree is required to prevent loops in the topology.) Interior branches of the spanning tree are relatively stable (i.e., the controller and base stations do not move often). Terminals, which are leaves on the spanning tree, become unattached, and must be reattached frequently.

2) The network layer routes messages from terminals to the host, from the host to terminals, and from terminals to terminals along branches of the spanning tree.

3) The network layer provides a service for storing messages for SLEEPING terminals. Messages which cannot be delivered immediately can be saved by the network entity in a parent node for one or more hello times.

4) The network layer propagates lost node information throughout the spanning tree.

5) The network layer maintains the spanning tree links in the absence of regular data traffic.

A transport layer is responsible for establishing and maintaining a reliable end-to-end data path between transport access points in any two nodes in the network. The transport layer provides unreliable, reliable and a transaction-oriented services. The transport layer should be immune to implementation changes in the network layer.

The responsibilities of the transport layer include the following.

1) Estatblishing and maintaining TCP-like connections for reliable root-to-terminal data transmission.

2) Maintaining VMTP-like transaction records for reliable transient message passing between any two nodes.

3) Detecting and discarding duplicate packets.

4) Retransmitting lost packets.

Layers 1 through 4 are self-contained within the Norand RF network, and are independent of the host computer and of terminal applications. The session layer (and any higher layers) are dependent on specific applications. Therefore, the

session protocol (and higher protocols) must be implemented as required. Note that a single transport access point is sufficient to handle single sessions with multiple nodes. Multiple concurrent sessions between any two nodes could be handled with a session identifier in a session header.

Network address requirements are as follows. DLC framed contain a hop destination and source address in the DLC header network packets contain an end-to-end destination and a source address in the network header. Transport messages do not contain an address field; instead, a transport connection is defined by network layer source and destination address pairs. Multiple transport connections require multiple network address pairs.

The transport header contains a TRANSPORT ACCESS POINT identifier. DLC and network addresses are consistent and have the same format. Each node has a unique LONG ADDRESS which is programmed into the node at the factory. The long address is used only to obtain a SHORT ADDRESS from the root node.

The network entity in each node obtains a SHORT ADDRESS from the root node, which identifies the node uniquely. The network entity passes the short address to the DLC entity. Short addresses are used to minimize packet sizes.

Short addresses consist of the following. There is:

an address length bit (short or long).

a spanning tree identified.

a node-type identifier. Node types are well known.

a unique multi-cast or broadcast node identifier.

The node-identifier parts of root addresses are well known and are constant. A default spanning tree identifier is well known by all nodes. A non-default spanning tree identifier can be entered into the root node (i.e., by a network administrator) and advertised to all other nodes in "hello" packets. The list of non-default spanning trees to which other nodes can attach must be entered into each node.

A node-type identifier of all 1's is used to specify all node types. A node identifier of all 1's is used to specify all nodes of the specified type. A DLC identifier of all 0's is used to specify a DLC entity which does not yet have an address. The all-0's address is used in DLC frames that are used to send and receive network ADDRESS packets. (The network entity in each node filters ADDRESS packets based on the network address.)

Short-address allocation is accomplished as follows. Short node identifiers of root nodes are well known. All other nodes must obtain a short node identifier from the root. To obtain a short address, a node send an ADDRESS request packet to the root node. The source addresses (i.e., DLC and network) in the request packet are LONG ADDRESSES. The root maintains an address queue of used and unused SHORT ADDRESSES. If possible, the root selects an available short address, associates the short address with the long address of the requesting node, and returns the short address to the requesting node in an ADDRESS acknowledge packet. (Note that the destination address in the acknowledge packet is a long address.)

A node must obtain a (new) short address initially and whenever an ADDRESS-TIMEOUT inactivity period expires without having the node receive a packet from the network entity in the root.

The network entity in the root maintains addresses in the address queue in least recently used order. Whenever a packet is received, the source address is moved to the end of the queue. The address at the head of the queue is available for use by a requesting node if it has never been used or if it has been inactive for a MAX-ADDRESS-LIFE time period.

MAX-ADDRESS-LIFE must be larger than ADDRESS-TIMEOUT to ensure that an address is not in use by any node when it becomes available for another node. If the root receives an ADDRESS request from a source for which an entry exists in the address queue, the root simply updates the queue and returns the old address.

The network layer organizes nodes into an optimal spanning tree with the controller at the root of the tree. (Note that the spanning three identifier allows two logical trees to exist in the same coverage area.) Spanning tree organization is facilitated with a HELLO protocol which allows nodes to determine the shortest path to the root before attaching to the spanning tree. All messages are routed along branches of the spanning tree.

Nodes in the network are generally categorized as ATTACHED or UNATTACHED. Initially, only the root node is attached. A single controller may be designated as the root, or multiple root candidates (i.e. controllers) may negotiate to determine which node is the root. Attached bridge nodes and root candidates transmit "HELLO" packets at calculated intervals. The HELLO packets include:

a) the source address, which includes the spanning tree ID).

b) a broadcast destination address.

c) a "seed" value from which the time schedule of future hello messages can be calculated.

d) a hello slot displacement time specifying an actual variation that will occur in the scheduled arrival of the very next hello message (the scheduled arrival being calculated from the "seed").

e) the distance (i.e., path cost) of the transmitter from the host. The incremental portion of the distance between a node and its parent is primarily a function of the type of physical link (i.e., ethernet, RS485, RF, or the like). If a signal-strength indicator is available, connections are biased toward the link with the best signal strength. The distance component is intended to bias path selection toward (i.e., wired) high-speed connections. Setting a minimum signal strength threshold helps prevent sporadic changes in the network. In addition, connections can be biased to balance the load (i.e., the number of children) on a parent node.

f) a pending message list. Pending message lists consist of 0 or more destination-address/message-length pairs. Pending messages for terminals are stored in the terminal's parent node.

g) a detached-node list. Detached-node lists contain the addresses of nodes which have detached from the spanning tree. The root maintains two lists. A private list consists of all detached node addresses, and an advertised list consists of the addresses of all detached nodes which have pending transport messages. The addresses in the hello packet are equivalent to the advertised list.

An internal node learns which entries should be in its list from hello messages transmitted by its parent node. The root node builds its detached-node lists from information received in DETACH packets. Entries are included in hello messages for DETACH-MSG-LIFE hello times.

Attached notes broadcast "SHORT HELLO" messages immediately if they receive an "HELLO.request" packet with a global destination address; otherwise, attached nodes will only broadcast hello messages at calculated time intervals in "hello slots." Short hello messages do not contain a pending-message or detached-node list. Short hello messages are sent independently of regular hello messages and do not affect regular hello timing.

Unattached nodes (nodes without a parent in the spanning tree) are, initially, in an "UNATTACHED LISTEN" state. During the listen state, a node learns which attached base station/controller is closest to the root node by listening to hello messages. After the listening period expires an unattached node sends an ATTACH.request packet to the attached node closest to the root. The attached node immediately acknowledges the ATTACH.request, and send the ATTACH.request packet onto the root (controller) node. The root node returns the request as an end-to-end ATTACH-.confirm packet. If the newly-attached node is a base station, the node calculates its link distance and adds the distance to the distance of its parent before beginning to transmit hello messages.

The end-to-end ATTACH.request functions as a discovery packet, and enables the root node to learn the address of the source node quickly. The end-to-end ATTACH. request, when sent from a node to the root, does not always travel the entire distance. When a downstream node receives an ATTACH.request packet and already has a correct routing entry for the associated node, the downstream node intercepts the request and returns the ATTACH.confirm to the source node. (Note that any data piggy-backed on the ATTACH.request packet must still be forwarded to the host.) This situation occurs whenever a "new" path has more than one node in common with the "old" path.

The LISTEN state ends after MIN—HELLO hello time slots if hello messages have been received from at least one node. If no hello messages have been received the listening node waits and retries later.

An attached node may respond to a hello message from a node other than its parent (i.e., with an ATTACH.request) if the difference in the hop count specified in the hello packet exceeds a CHANGE-THRESHOLD level.

Unattached nodes may broadcast a GLOBAL ATTACH-.request with a multi-cast base station destination address to solicit short hello messages from attached base stations. The net effect is that the LISTEN state may (optionally) be shortened. (Note that only attached base station or the controller may respond to ATTACH. requests.) Normally, this facility is reserved for base stations with children and terminals with transactions in progress.

ATTACH. requests contain a (possibly empty) CHILD LIST, to enable internal nodes to update their routing tables. ATTACH.requests also contain a "count" field which indicates that a terminal may be SLEEPING. The network entity in the parent of a SLEEPING terminal con temporarily store messages for later delivery. If the count field is non-zero, the network entity in a parent node will store pending messages until 1) the message is delivered, or 2) "count" hello times have expired.

Transport layer data can be piggy-backed on an attached request packet from a terminal. (i.e., an attach request/confirm can be implemented with a bit flag in the network header of a data packet.)

Network Layer Routing

All messages are routed along branches of the spanning tree. Base stations "learn" the address of terminals by monitoring traffic from terminals (i.e., to the root). When a base station receives (i.e., an ATTACH.request) packet, destined for the root, the base station creates or updates an entry in its routing table for the terminal. The entry includes the terminal address, and the address of the base station which sent the packet (i.e., the hop address). When a base station receives an upstream packet (i.e., from the root, destined for a terminal) the packet is simply forwarded to the base station which is in the routing entry for the destination. Upstream messages (i.e., to a terminal) are discarded whenever a routing entry does not exist. Downstream messages (i.e., from a terminal to the root) are simply forwarded to the next downstream node (i.e., the parent in the branch of the spanning tree.

TERMINAL-TO-TERMINAL COMMUNICATIONS is accomplished by routing all terminal-to-terminal traffic through the nearest common ancestor. In the worst case, the root is the nearest common ancestor. A "ADDRESS SERVER" facilitates terminal-to-terminal communications (see below).

DELETING INVALID ROUTING TABLE ENTRIES is accomplished in several ways: connection oriented transport layer ensures that packets will arrive from nodes attached to the branch of the spanning tree within the timeout period, unless a node is disconnected.)

2) Whenever the DLC entity in a parent fails RETRY MAX times to send a message to a child node, the node is logically disconnected from the spanning tree, with one exception. If the child is a SLEEPING terminal, the message is retained by the network entity in the parent for "count" hello times. The parent immediately attempts to deliver the message after it sends its next hello packet. If, after "count" hello times, the message cannot be delivered, then the child is logically detached from the spanning tree. Detached node information is propagated downstream to the root node, each node in the path of the DETACH packet must adjust its routing tables appropriately according to the following rules: a) if the lost node is a child terminal node, the routing entry for the terminal is deleted and a DETACH packet is generated. b) if the node specified in DETACH packet is a terminal and the node which delivered the packet is the next hop in the path to the terminal, then the routing table entry for the terminal is deleted and the DETACH packet is forwarded. c) if the lost node is a child base station node then all routing entries which specify that base station as the next hop are deleted and a DETACH packet is generated for each lost terminal.

IN GENERAL, WHENEVER A NODE DISCOVERS THAT A TERMINAL IS DETACHED, IT PURGES ITS ROUTING ENTRY FOR THE TERMINAL. WHENEVER A NODE DISCOVERS THAT A BASE STATION IS DETACHED, IT PURGES ALL ROUTING ENTRIES CONTAINING THE BASE STATION. ONLY ENTRIES FOR UPSTREAM NODES ARE DELETED.

When DETACH packets reach the root node, they are added to a "detached list." Nodes remain in the root node's detached list until a) the node reattaches to the spanning tree, or b) the list entry times out. The detached list is included in hello messages and is propagated throughout the spanning tree.

For example, if a terminal detaches and reattaches to a different branch in the spanning tree, all downstream nodes in the new branch (quickly) "learn" the new path to the terminal. Nodes which were also in the old path change their routing tables and no longer forward packets along the old path. At least one node, the root, must be in both the old and new path. A new path is established as soon as an end-to-end attach request packet from the terminal reaches a node which was also in the old path.

4) A node (quickly) learns that it is detached whenever it receives a hello message, from any node, with its address in the associated detached list. The detached node can, optionally, send a global ATTACH.request, and then enters the UNATTACHED LISTEN state and reattaches as described above. After reattaching, the node must remain in a HOLD-DOWN state until its address is aged out of all

detached lists. During the HOLD-DOWN state the node ignores detached lists.

5) A node becomes disconnected and enters the UNATTACHED LISTEN state whenever HELLO-RETRY-MAX hello messages are missed from its parent node.

6) A node enters the ATTACHED LISTEN state whenever a single hello message, from its parent, is missed. SLEEPING terminals remain awake during the ATTACHED LISTEN state. The state ends when the terminal receives a data or hello message from its parent. The terminal becomes UNATTACHED when a) its address appears in the detached list of a hello message from an ode other than its parent, or b) HELLO-RETRY-MAX hello messages are missed. The total number of hello slots spend in the LISTEN state is constant.

If a node in the ATTACHED LISTEN state discovers a path to the root which is CHANGE-THRESHOLD shorter, it can attach to the shorter path. Periodically, SLEEPING terminals must enter the ATTACHED Learn state to discovery any changes (i.e., shorter paths) in the network topology.

Hello Synchronization

All attached non-terminal nodes broadcast periodic "hello" messages in discrete "hello slots" at calculated intervals. Base station nodes learn which hello slots are busy and refrain from transmitting during busy hello slots.

A terminal refrains from transmitting during the hello slot of its parent node and refrains from transmitting during message slots reserved in a hello message.

The hello message contains a "seed" field used in a well-known randomization algorithm to determine the next hello slot for the transmitting node and the next seed. The address of the transmitting node is used as a factor in the algorithm to guarantee randomization. Nodes can execute the algorithm i times to determine the time (and seed) if the i-the hello message from the transmitter.

After attached, a base station chooses a random initial seed and a non-busy hello slot and broadcasts a hello message in that slot. The base station chooses succeeding hello slots by executing the randomization algorithm. If an execution of the algorithm chooses a busy slot, the next free slot is used and a hello "displacement" field indicates the offset from a calculated slot. Cumulative delays are not allowed (i.e., contention delays during the i hello transmission do not effect the time of the i+1 hello transmission).

HELLO-TIME and HELLO-SLOT-TIME values are set by the root node and flooded throughout the network in hello messages. The HELLO-SLOT-TIME value must be large enough to minimize hello contention.

A node initially synchronizes on a hello message from its parent. A SLEEPING node can power-down with an active timer interrupt to wake it just before the next expected hello message. The network entity in base station nodes can store messages for SLEEPING nodes and transmit them immediately following the hello messages. This implementation enables SLEEPING terminals to receive unsolicited messages. (Note that the network layer always tries to deliver messages immediately, before storing them.) Retries for pending messages are transmitted in a round-robin order when messages are pending for more than one destination.

Note that a child node that misses i hello messages, can calculate the time of the i+1 hello message.

Transport Layer Theory and Implementation Notes

The transport layer provides reliable, unreliable, and transaction-oriented services. Two types of transport connections are defined: 1) a TCP-like transport connection may be explicitly requested for long-lived connections or 2) a VMTP-like connection-record may be implicitly set up for transient connections. In addition, a connectionless service is provided for nodes which support an end-to-end transport connection with the host computer.

The interfaces to the next upper (i.e., application) layer include:

CONNECT (access—point, node—name)

LISTEN (access—point)

UNITDATA (access—point, node—name, buffer, length)

SEND (handle, buffer, length)

RECEIVE (handle, buffer, length)

CLOSE (handle)

The "handle" designates the connection type, and is the connection identifier for TCP-like connections.

SEND messages require a response from the network node (root or terminal) to which the message is directed.

UNITDATA messages do not require a response. UNITDATA is used to send messages to a host which is capable of supporting end-to-end host-to-terminal transport connections.

Because the network layer provides an unreliable service, the transport layer is required to detect duplicate packets and retransmit lost packets. Detecting duplicates is facilitated by numbering transport packets with unambiguous sequence numbers.

Transport Connections

TCP-like transport connections are used for message transmission over long-lived connections. The connections may be terminal-to-root or terminal-to-terminal (i.e., base stations are not involved in the transport connection).

TCP-like transport connections are established using a 3-way handshake. Each end selects its initial sequence number and acknowledges the other end's initial sequence number during the handshake. The node which initiates the connection must wait a MAX-PACKET-LIFE time, before requesting a connection, to guarantee that initial sequence numbers are unambiguous. Sequence numbers are incremented modulo MAX-SEQ, where MAX-SEQ is large enough to insure that duplicate sequence members do not exist in the network. Packet types for establishing and breaking connections are defined as in TCP.

A TCP-like connection is full-duplex and a sliding window is used to allow multiple outstanding transport packets. An ARQ bit in the transport header is used to require an immediate acknowledgment from the opposite end.

VMTP-like connections are used for transient messages (i.e. terminal-to-terminal mail messages). VMTP-like connection records are built automatically. A VMTP-like connection record is built (or updated) whenever a VMTP-like transport message is received. The advantage is that an explicit connection request is not required. The disadvantage is that longer and more carefully selected sequence numbers are required. A VMTP-like connection is half-duplex. (A full-duplex connection at a higher layer can be built with two independent half-duplex VMTP-like connections.) Acknowledgments must be handled by higher layers.

Transport connections are defined by the network end-to-end destination and source addresses.

A MAX—TP—LIFE timeout is associated with transport connections. Transport connection records are purged after a MAX—TP—LIFE time expires without activity on the connection. The transport entity in a terminal can ensure that its transport connection will not be lost by transmitting an empty time-fill transport packet whenever TP—TIMEOUT time expires without activity.

The transport entity in a node stores messages for possible retransmission. Note that retransmissions may not always

follow the same path (primarily) due to moving terminals and the resulting changes, in the spanning tree. For example, the network entity in a parent node may disconnect a child after the DLC entity reports a message delivery failure. The child will soon discover that it is detached and will reattach to the spanning tree. Now when the transport entity (i.e. in the root) re-sends the message, it will follow the new path.

Transport Message Timing and Sleeping Terminals

The transport entity in a terminal calculates a separate timeout for SEND and TRANSACTION operations. Initially, both timeouts are a function of the distance of the terminal from the root node.

A TCP-like algorithm is used to estimate the expected propagation delay for each message type. Messages, which require a response, are retransmitted if twice the expected propagation time expires before a response is received. SLEEPING terminals can power down for a large percentage of the expected propagation delay before waking up to receive the response message. Note that missed messages may be stored by the network layer for "count" hello times.

Medium Access Control (MAC) Theory and Implementation Notes

Access to the network communications channel is regulated in several ways: executing the full CSMA algorithm (see MAC layer above). The sender retransmits unacknowledged messages until a RETRY MAX count is exhausted.

The retry time of the DLC must be relatively short so that lost nodes can be detected quickly. When the DLC layer reports a failure to deliver a message to the network layer, the network layer can 1) save messages for SLEEPING terminals for later attempts, or 2) DETACH the node from the spanning tree. Note that most lost nodes are due to moving terminals.

The node identifier part of the DLC address is initially all 0's for all nodes except the root node. The all 0's address is used by a node to send and received data-link frames until a unique node identifier is passed to the DLC entity in the node. (The unique node identifier is obtained by the network entity.)

Address Resolution

Well-known names too are bound to network addresses in several ways:

- The network address and TRANSPORT ACCESS ID of a name server, contained in the root, is well-known by all nodes.
- A node can register a well-known name with the name server contained in the root node.
- A node can request the network access address of another application from the name server by using the well-known name of the application.

Possible Extensions

Base station-to-base station traffic could also be routed through the controller if the backward learning algorithm included base station nodes. (Each base station would simply have to remember which direction on its branch of the spanning tree to send data directed toward another base station.)

The possibility of multiple controllers is kept open by including a spanning-tree identifier in address fields. Each controller defines a unique spanning tree. A node can be in more than one spanning tree, with separate network state variables defined for each.

Thus, the preferred embodiment of the present invention describes an apparatus and a method of efficiently routing data through a network of intermediate base stations in a radio data communication system.

In alternate embodiments of the present invention, the RF Networks contain multiple gateways. By including a system identifier in the address field of the nodes, it is possible to determine which nodes are connected to which networks.

Multipath Fading

In a preferred embodiment, the data to be sent through the RF communication link is segmented into a plurality of DATA packets and is then transmitted. Upon receipt, the DATA packets are reassembled for use or storage. Data segmentation of the RF link provides better communication channel efficiency by reducing the amount of data loss in the network. For example, because collisions between transmissions on an RF link cannot be completely avoided, sending the data in small segments results in an overall decrease in data loss in the network, i.e., only the small segments which collide have to be re-sent.

Similarly, choosing smaller data packets for transmission also reduces the amount of data loss by reducing the inherent effects of perturbations and fluctuations found in RF communication links. In particular, RF signals are inherently subject to what is termed "multi-path fading." A signal received by a receiver is a composite of all signals that have reached that receiver by taking all available paths from the transmitter. The received signal is therefore often referred to as a "composite signal" which has a power envelope equal to the vector sum of the individual components of the multi-path signals received. If the signals making up the composite signal are of amplitudes that add "out of phase", the desired data signal decreases in amplitude. If the signal amplitudes are approximately equal, an effective null (no detectable signal at the receiver) results. This condition is termed "fading".

Normally changes in the propagation environment occur relatively slowly, i.e., over periods of time ranging from several tenths (1/10's) of seconds to several seconds. However, in a mobile RF environment, receivers (or the corresponding transmitters) often travel over some distance in the course of receiving a message. Because the signal energy at each receiver is determined by the paths that the signal components take to reach that receiver, the relative motion between the receiver and the transmitter causes the receiver to experience rapid fluctuations in signal energy. Such rapid fluctuations can cause fading and result in the loss of data if the amplitude of the received signal falls below the sensitivity of the receiver.

Over small distances, the signal components that determine the composite signal are well correlated, i.e., there is a small probability that a significant change in the signal power envelope will occur over the distance. If a transmission of a data packet can be initiated and completed before the relative movement between the receiver and transmitter exceeds the "small distance", data loss to fading is unlikely to occur. The maximum "small distance" wherein a high degree of correlation exists is referred to hereafter as the "correlation distance".

As expressed in wavelengths of the carrier frequency, the correlation distance is one half (1/2) of the wavelength, while a more conservative value is one quarter (1/4) of the wavelength. Taking this correlation distance into consideration, the size of the data packet for segmentation purposes can be calculated. For example, at 915 MHz (a preferred RF transmission frequency), a quarter wavelength is about 8.2 centimeters. A mobile radio moving at ten (10) miles per hour, or 447 centimeters per second, travels the quarter wavelength in about 18.3 milliseconds. In such an environment, as long as the segment packet size remains under 18.3 milliseconds, fading does not pose any problems. In a preferred embodiment, five (5) millisecond data packet segments are chosen which provides a quasi-static multipath communication environment.

Duty Cycle

In a preferred embodiment, each base station broadcasts HELLO messages about every two (2) seconds. If upon power up, two base stations choose to broadcast at the exact same broadcast, collisions between HELLO messages would occur and continue to occur in a lock-step fashion upon each broadcast. To prevent such an occurrence, each base station chooses a pseudo-random offset from the 2 second base time between HELLO messages to actually broadcast the HELLO message. For example, instead of beginning each HELLO message broadcast at exactly 2 seconds after the last, the base station might pseudo-randomly offset the 2 seconds by a negative (−) value of 0.2, yielding a broadcast at 1.8 seconds. Because every base station generates a different pseudo-random offset generation, the problem of lock-stepping collisions is avoided.

Additionally, instead of using a true randomization, a pseudo-random offset is used which bases all pseudo-random offset calculations on a seed value (the "seed"). The "seed" is broadcast in each HELLO message so that the timing of the next HELLO message may be calculated by any listening mobile terminal. The use of the seed, and pseudo random offset generation, allows the terminal to "sleep" (enter an energy and CPU saving mode) between HELLO messages and be able to "wake up" (dedicate energy and CPU concentration on RF reception) and stay awake for the minimal time needed to receive the next HELLO message. The relationship between the time that a base station must remain awake to the time it may sleep is called the "duty cycle".

Using a 2 second HELLO to HELLO message timing with a pseudo-random offset range of +/− ½ of a second, the preferred embodiment has achieved a very low duty cycle. Further details of this timing can be found in the Bridge Layer Specification in Appendix E.

In addition, Appendix A provides a list of the program modules which are found in microfiche Appendix B. These modules comprise an exemplary computer program listing of the source code ("C" programming language) used by the network controllers and intelligent base transceivers of the present invention. Note that the term "AMX" found in Appendices A and B refers to the operating system software used. "AMX" is a multi-tasking operating system from KADAK Products, Ltd., Vancouver, B.C., Canada. Appendix C, D, E, F, and G provide system specifications for the SST Network Architecture, SST Network Frame Format, Bridging Layer, MAC Layer, and Physical Layer of one embodiment of the present invention.

As is evident from the description that is provided above, the implementation of the present invention can vary greatly depending upon the desired goal of the user. However, the scope of the present invention is intended to cover all variations and substitutions which are and which may become apparent from the illustrative embodiment of the present invention that is provided above, and the scope of the invention should be extended to the claimed invention and its equivalents.

What is claimed is:

1. A communication network supporting wireless communication throughout an area, said communication network comprising:

a plurality of battery-powered, wireless terminal nodes that roam throughout the area;

a plurality of bridging nodes which, together, form a spanning tree that specifies wireless communication pathways for relaying messages between said plurality of battery-powered, wireless terminal nodes as said plurality of battery-powered, wireless terminal nodes roam throughout the area;

at least one of said plurality of battery-powered, wireless terminal nodes selectively enters and exits a sleep mode

each of said plurality of bridging nodes transmits at predetermined intervals hello messages that indicate the presence of pending messages;

each of said plurality of bridging nodes stores messages destined for said plurality of battery-powered, wireless terminal nodes;

each of said plurality of bridging nodes forwards stored messages to the said plurality of battery-powered, wireless terminal nodes upon request from said plurality of battery-powered, wireless terminal nodes; and

while in a sleep mode, the at least one of said plurality of battery-powered, wireless terminal nodes wakes to listen to the hello message transmissions to determine whether to exit the sleep mode to retrieve pending messages.

2. The communication network of claim 1 further comprises means within each of said plurality of bridging nodes for determining whether the at least one of said plurality of battery-powered, wireless terminal nodes has been disconnected from the network.

3. The communication network of claim 2 wherein the determining means considers whether the at least one of said plurality of battery-powered, wireless terminal nodes is in the sleep mode in making a determination of disconnection.

4. The communication network of claim 1 wherein the at least one of said plurality of battery-powered, wireless terminal nodes comprises a receiver, and the one of said plurality of battery-powered, wireless terminal nodes, when in the sleep mode, enters a power saving state that disables the receiver except when necessary to listen to hello message transmissions.

5. A communication network supporting wireless communication of messages, said communication network comprising:

a plurality of terminal nodes each having a wireless receiver operable in a normal state or in a power saving state;

a plurality of bridging nodes each having a wireless transceiver to support wireless communication to the plurality of terminal nodes;

the plurality of bridging nodes attempt to immediately deliver messages destined for those of the plurality of terminal nodes that operate in the normal state;

each of the plurality of bridging nodes attempt to deliver messages destined for those of the plurality of terminal nodes that operate in the power saving state by transmitting at predetermined intervals beacons that identify those of the plurality of wireless terminal nodes operating in the power saving state that have a message awaiting delivery;

those of the plurality of wireless terminal nodes that operate in the power saving state synchronize operation of their receivers to receive the beacons from at least one of the plurality of bridging nodes; and

each of those of the plurality of wireless terminal nodes operating in the power saving state that determines from the received beacons that it has a message awaiting delivery directs further operation of its receiver to receive the message.

6. The communication network of claim 5 wherein at least one of the plurality of terminal nodes communicate to at