UNITED STATES PATENT AND TRADEMARK OFFICE

UNITED STATES DEPARTMENT OF COMMERCE
United States Patent and Trademark Office
Address: COMMISSIONER FOR PATENTS
P.O. Box 1450
Alexandria, Virginia 22313-1450
www.uspto.gov

APPLICATION NO.	FILING DATE	FIRST NAMED INVENTOR	ATTORNEY DOCKET NO.	CONFIRMATION NO.
14/050,954	10/10/2013	Paul MOHR	BOSC.P8349US/11603535	8033

24972 7590 05/18/2017
NORTON ROSE FULBRIGHT US LLP
1301 Avenue of the Americas
NEW YORK, NY 10019-6022

EXAMINER
PATEL, DHAIRYA A

ART UNIT	PAPER NUMBER
2453	

NOTIFICATION DATE	DELIVERY MODE
05/18/2017	ELECTRONIC

Please find below and/or attached an Office communication concerning this application or proceeding.

The time period for reply, if any, is set in the attached communication.

Notice of the Office communication was sent electronically on above-indicated "Notification Date" to the following e-mail address(es):

nyipdocket@nortonrosefulbright.com

UNITED STATES PATENT AND TRADEMARK OFFICE

BEFORE THE PATENT TRIAL AND APPEAL BOARD

Ex parte PAUL MOHR, STEFAN STRAUB, CHRISTOPHER POHL, KAI ROETTGER, HERBERT LEUWER, and THOMAS BAYER

Appeal 2017-004235
Application 14/050,954[1]
Technology Center 2400

Before ALLEN R. MacDONALD, BETH Z. SHAW, and DAVID J. CUTITTA II, *Administrative Patent Judges*.

CUTITTA, *Administrative Patent Judge*.

DECISION ON APPEAL

This is an appeal under 35 U.S.C. § 134(a) from the Final Rejection of claims 1–13, which constitute all of the pending claims in the application on appeal. Appeal Br. 1. We have jurisdiction over this appeal under 35 U.S.C. § 6(b).

We affirm.

---

[1] According to Appellants, the real party in interest is the applicant, Robert Bosch GmbH. *See* Appeal Br. 1.

STATEMENT OF THE CASE

According to Appellants, the application relates to achieving a high data transmission rate by handling references on data to be transmitted, which are stored in a storage apparatus, instead of the actual data itself. *See* Abstract.[2]

CLAIMED SUBJECT MATTER

Claims 1, 7, and 11 are independent. Claim 1 is representative and is reproduced below with disputed limitation in italics:

> 1. A method for transmitting data between two devices in at least one of a client layer and a transport layer of a communication system, comprising:
>
> buffering, in a central storage apparatus, the data to be transmitted; and
>
> performing the data transmission according to the transport control protocol (TCP);
>
> *wherein a TCP protocol operation hardware component handles references on the data to be transmitted which are stored in the storage apparatus, instead of the actual data itself.*

Appeal Br., Claims App'x 1.

---

[2] Throughout this Decision, we refer to the following documents for their respective details: (1) Appellants' Specification filed October 10, 2013 ("Spec."); (2) the Final Office Action ("Final Act.") mailed December 4, 2015; (3) the Appeal Brief ("Appeal Br.") filed June 14, 2016; (4) the Examiner's Answer ("Ans.") mailed November 9, 2016; and (5) the Reply Brief ("Reply Br.") filed January 9, 2017.

REFERENCES

The prior art relied upon by the Examiner in rejecting the claims on appeal includes:

Niemela et al. ("Niemela")	US 2002/0003783 A1	Jan. 10, 2002
Langworthy et al. ("Langworthy")	US 2006/0047947 A1	Mar. 2, 2006
Breed	US 2008/0256271 A1	Oct. 16, 2008
Schneider, et al. ("Schneider")	EP 2 287 691 A1	Aug. 11, 2009

REJECTIONS

(1) Claims 1–13 stand rejected under 35 U.S.C. § 101 as being directed to non-statutory subject matter. Final Act. 2–3.

(2) Claims 1, 5–7, and 9–11 stand rejected under 35 U.S.C. § 103(a) as being unpatentable over the combination of Breed and Langworthy. Final Act. 5–8.

(3) Claims 2, 3, 8, 12, and 13 stand rejected under 35 U.S.C. § 103(a) as being unpatentable over the combination of Breed, Langworthy, and Schneider. Final Act. 8–11.

(4) Claim 4 stands rejected under 35 U.S.C. § 103(a) as being unpatentable over the combination of Breed, Langworthy, Schneider, and Niemela. Final Act. 11–12.

Our review in this Appeal is limited only to the above rejections and issues raised by Appellants. We have not considered other possible issues that have not been raised by Appellants and which are, therefore, not before us. *See* 37 C.F.R. § 41.37(c)(1)(iv).

ISSUES

(1) Does the Examiner err in rejecting claims 1–13 under 35 U.S.C. § 101 as being directed to non-statutory subject matter?

(2) Does the Examiner err in finding the combination of Breed and Langworthy teaches or suggests "wherein a TCP protocol operation hardware component handles references on the data to be transmitted which are stored in the storage apparatus, instead of the actual data itself," as recited in claim 1?

CONTENTIONS AND ANALYSIS

Issue 1

The Examiner rejects claims 1–13 under 35 U.S.C. § 101 as directed to non-statutory subject matter that does not amount to significantly more than an abstract idea because the claims require "no more than a generic computer to perform generic computer functions that are well understood, routine and conventional activities previously known to the industry." Final Act. 3.

Appellants argue the claims are patent-eligible "because they are directed to an improvement in technology and not to an abstract idea." Appeal Br. 3.

We agree with Appellants' conclusions as to this rejection of the claims. The Supreme Court has set forth "a framework for distinguishing patents that claim laws of nature, natural phenomena, and abstract ideas from those that claim patent-eligible applications of those concepts." *Alice Corp. Pty. Ltd. v. CLS Bank Int'l*, 134 S. Ct. 2347, 2355 (2014) (*citing Mayo*

Collaborative Servs. v. Prometheus Labs, Inc., 132 S. Ct. 1289, 1296–97 (2012)). According to the Supreme Court's framework, we must first determine whether the claims at issue are directed to one of those concepts (i.e., laws of nature, natural phenomena, and abstract ideas). *Id.* If so, we must secondly "consider the elements of each claim both individually and 'as an ordered combination' to determine whether the additional elements 'transform the nature of the claim' into a patent-eligible application." *Id.* (internal citation omitted). The Supreme Court characterizes the second step of the analysis as "a search for an 'inventive concept'—*i.e.*, an element or combination of elements that is 'sufficient to ensure that the patent in practice amounts to significantly more than a patent upon the [ineligible concept] itself.'" *Id.* (internal citation omitted).

According to step one of *Alice*, "[w]e must first determine whether the claims at issue are directed to a patent-ineligible concept," such as an abstract idea. *Alice*, 134 S. Ct. at 2355.

> The "directed to" inquiry []cannot simply ask whether the claims *involve* a patent-ineligible concept, because essentially every routinely patent-eligible claim involving physical products and actions *involves* a law of nature and/or natural phenomenon—after all, they take place in the physical world. *See Mayo*, 132 S. Ct. at 1293 ("For all inventions at some level embody, use, reflect, rest upon, or apply laws of nature, natural phenomena, or abstract ideas.") Rather, the "directed to" inquiry applies a stage-one filter to claims, considered in light of the specification, based on whether "their character as a whole is directed to excluded subject matter." *Internet Patents Corp. v. Active Network, Inc.*, 790 F.3d 1343, 1346 (Fed. Cir. 2015); *see Genetic Techs. Ltd. v. Merial L.L.C.*, 818 F.3d 1369, 1375, 2016 WL 1393573, at *5 (Fed. Cir. 2016) (inquiring into "the focus of the claimed advance over the prior art").

Enfish, LLC v. Microsoft Corp., 822 F.3d 1327, 1335 (Fed. Cir. 2016). "The Supreme Court has suggested that claims 'purport[ing] to improve the functioning of the computer itself,'" or "improv[ing] an existing technological process" might not succumb to the abstract idea exception. *Enfish,* 822 F.3d at 1335 (citing *Alice*, 134 S. Ct. at 2358–59).

Thus, our reviewing court guides that the first step in the Alice inquiry asks whether the focus of the claims is on a specific asserted improvement in computer capabilities or an existing technological process, or, instead, on a process that qualifies as an "abstract idea" for which computers are invoked merely as a tool. *Enfish*, 822 F.3d at 1335–1336. *Accord McRO, Inc. v. Bandai Namco Games Am. Inc.*, 837 F.3d 1299, 1314 (Fed. Cir. 2016) ("We therefore look to whether the claims in these patents focus on a specific means or method that improves the relevant technology or are instead directed to a result or effect that itself is the abstract idea and merely invoke generic processes and machinery.").

In this case, we agree with Appellants that the claims are directed to a specific asserted improvement in transmitting data between two devices in a communication system. As an example, claim 1 recites "[a] method for transmitting data between two devices in at least one of a client layer and a transport layer of a communication system." Claims App'x 1. The claim improves efficiency by using a hardware component to "handle[] references on the data to be transmitted which are stored in the storage apparatus, instead of the actual data itself." That is, the claim is not broadly directed to the abstract concept of data transmission or to all forms of transmitting data but instead is specifically directed to performing data transmission according to TCP "wherein a TCP protocol operation hardware component handles

references on the data to be transmitted which are stored in the storage apparatus, instead of the actual data itself." Claims App'x 1. As a further example that the claim is not broadly directed to the abstract concept of data transmission, the Specification teaches that the

> central buffer 12 of the present invention replaces the socket buffer 3 and the plurality of client buffers in the prior art of Figure 1. The TCPHW component 10 of the present invention handles and processes only references on the data stored in the central buffer 12 instead of the actual raw data.

Spec. 15: 7–10.

Moreover, our conclusion that the claim is directed to an improvement of an existing technology is bolstered by the Specification's teachings that the claimed invention achieves benefits over a conventional TCP in hardware solution. "For instance, using 8 byte descriptors for segments of 128 or 256 byte size reduces the amount of data storage by a factor of up to 32. This enables the implementation of socket buffers for multiple TCP instances using internal FPGA RAM, which saves considerable processing performance and power." Spec. 12: 24–28. In addition, "[t]he bit toggle rate on interfaces is largely reduced with the transmission of data references instead of data values. This is particularly true for external interfaces with high pin capacities." Spec. 13: 1–3.

Accordingly, we disagree with the Examiner's conclusion that claim 1 is directed to an abstract idea. Rather, we conclude the focus of the claims are on a specific asserted improvement in an existing technological process. Thus, according to step one of the *Alice* test, claim 1 is not directed to an abstract idea. Because we find that claim 1 is not directed to ineligible subject matter, we do not reach step two of the *Alice* test. *Enfish*, 822 F.3d at 1339.

We, therefore, do not sustain the Examiner's rejection of claim 1 as being directed to patent ineligible subject matter. For the same reasons, we further do not sustain the rejections of independent claims 7 and 11, and dependent claims 2–6, and 8–10 under 35 U.S.C. § 101.

Issue 2

With respect to the rejection of independent claim 1 under 35 U.S.C. § 103(a), we disagree with Appellants' argument and we adopt as our own: (1) the findings and reasons set forth by the Examiner in the Office Action from which this appeal is taken (Final Act. 5–6) and (2) the reasons set forth by the Examiner in the Examiner's Answer in response to Appellants' Appeal Brief (Ans. 4–8). We highlight the following points for emphasis.

The Examiner relies on the combination of Breed and Langworthy to teach or suggest "wherein a TCP protocol operation hardware component handles references on the data to be transmitted which are stored in the storage apparatus, instead of the actual data itself," as recited in claim 1. Final Act. 5–6; Ans. 4–8 (citing Breed ¶¶ 19, 22, 61, Fig. 3). Specifically, the Examiner finds Breed's retransmission buffer, such as buffer 508, teaches handling references instead of the actual data itself. Final Act. 6 (citing Breed ¶ 19, *see also* Breed Fig. 5).

Appellants argue because claim 1 recites "'a TCP protocol operation hardware component' and 'the storage apparatus' as different apparatuses, it is evident that whatever the Examiner relies on to meet the storage apparatus cannot meet as well the TCP component." Appeal Br. 6.

We find this argument unpersuasive because we agree with the Examiner that Appellants' argument is not commensurate with the scope of claim 1. The Examiner correctly finds that the "claim language does *not* distinctly state or spell out that TCP protocol operation hardware component (hereinafter TCPHW) is in a different apparatus than the storage apparatus or that TCP protocol operation hardware component is a separate apparatus than storage apparatus." Ans. 5.

Appellants next argue,

> the Examiner is incorrect in asserting that the specification supports reading these two claimed terms as referring to a single hardware component. The specification refers to the claimed buffer as central buffer 12, which Figure 2 quite plainly illustrates as an element distinct from TCPHW component 10, which corresponds to the claimed TCP protocol hardware component.

Appeal Br. 7.

We find this argument unpersuasive because we agree with the Examiner's finding that the claimed TCPHW and central buffer can be interpreted as part of the same apparatus in view of Appellants' Specification. Ans. 5. As an initial matter, we note that Appellants fail to persuasively rebut the Examiner's interpretation that "TCPHW and storage apparatus can be [the] same apparatus NOT [a] different apparatus" in view of Figure 3 of the Specification. Ans. 5. Furthermore, we note without reliance in sustaining the rejection, that Figure 2 of Appellants' Specification also supports the Examiner's finding.

Figure 2 is reproduced below for illustration.

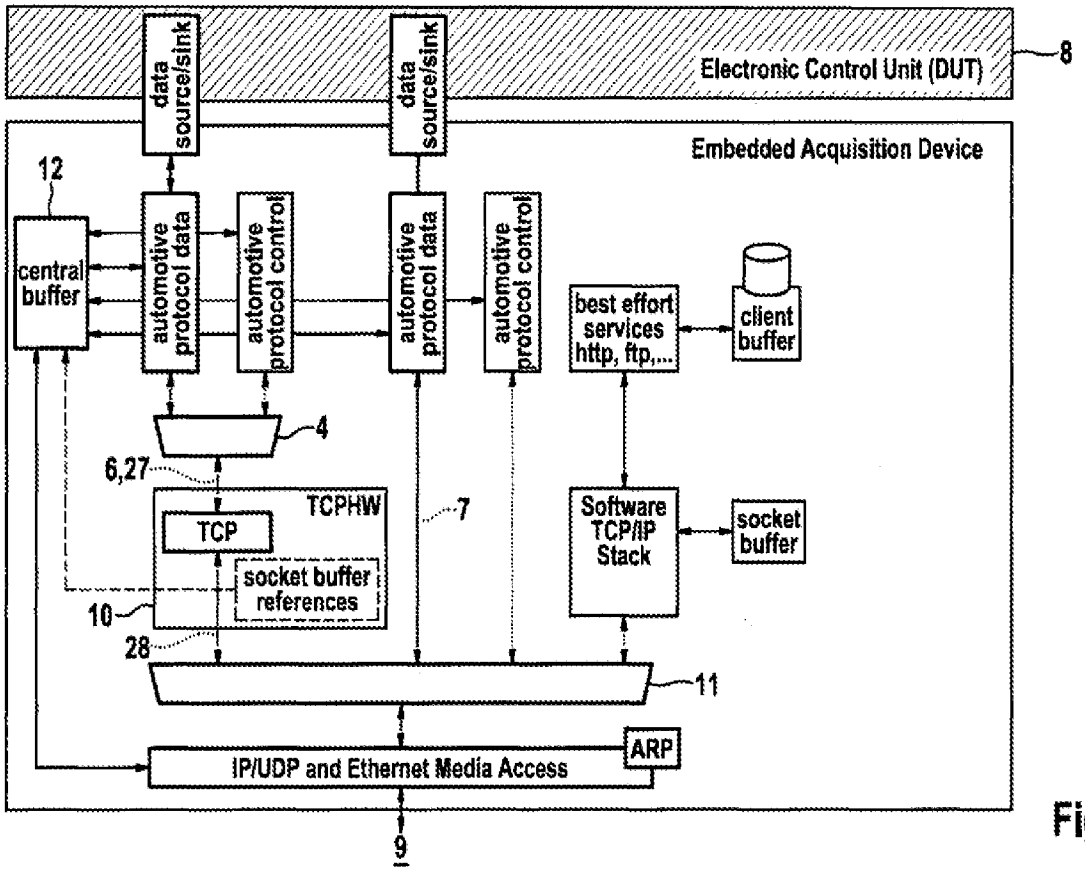

Fig. 2

Figure 2 of Appellants' Specification illustrates Embedded Acquisition Device communicating with embedded ECU interface device 8 and with an off-the-shelf personal computer running a measurement application software tool 9 "for the reliable transport of measurement, calibration and diagnostic[s] (MCD) data." Spec. 1:8–12; *See also* Spec. 15:25–28. Figure 2 also illustrates both central buffer 12 and TCPHW 10 as included/installed within Embedded Acquisition Device.

Accordingly, we find Appellants have not established that the Examiner's interpretation of claim 1 as failing to limit the TCPHW and the central storage apparatus to separate apparatuses is inconsistent with Appellants' Specification.

Appellants next argue "[w]hen the buffering refers to 'the'data to be transmitted, the use of the definite article signifies that the entirety of the actual data to be transmitted between the devices is buffered in the central storage device." Appeal Br. 7. Therefore, Breed fails to teach "buffering, in a central storage apparatus, the data to be transmitted," because Breed instead "teaches . . . a transmission buffer architecture that will store less than all the data that is to be transmitted." *Id.*

We do not agree that by using the definite article "the" in the limitation "the data to be transmitted," claim 1 limits the buffering to the entirety of the actual data to be transmitted. Accordingly, Appellants argue for patentability on the basis of a limitation that is not recited in the claims. Limitations not appearing in the claims cannot be relied upon for patentability. *See In re Self*, 671 F.2d 1344, 1348 (CCPA 1982).

Appellants further argue "even if the Examiner were correct in interpreting the claim to be satisfied by a single component serving as central storage apparatus and TCP hardware component, there still would be no basis for asserting that Breed meets these claim limitations" because the claimed "TCP hardware component handles 'references on the data to be transmitted['] which are stored in the storage apparatus, *instead of* the actual data itself." Appeal Br. 7. Thus, the "claim language does not encompass [] the possibility of handling some of the actual data to be transmitted and handling some other of this data just through the references thereto." Appeal Br. 8.

Appellants' argument is not persuasive. Appellants do not dispute that Breed suggests handling/buffering references instead of the actual data itself. Rather, Appellants argue that Breed separately suggests buffering

data from RAM 506 in addition to the buffering of references from ROM/Flash 504, and the claim does not encompass the possibility of handling some of the actual data to be transmitted and handling some other of this data just through the references, as in Breed. Appeal Br. 8. Breed's separate teaching of buffering data from RAM 506, however, does not negate Breed's teaching of buffering references, instead of the data itself, for data sourced from ROM/Flash 504. Nor have Appellants established that the claim is limited to a system that only *ever* buffers references on the data to be transmitted. Therefore, we find this argument is not commensurate with the scope of the claim. *See Self*, 671 at 1348.

Appellants argue for the first time in the Reply Brief

> to meet the express language of the claim, a prior art transmission method would have to handle references on data "to be transmitted" that has already been buffered. However, that is not the case with Breed because in Breed the alleged "references" are to ROM data that are not buffered.

Reply Br. 3.

This argument is untimely and need not be considered in the absence of any good faith showing why it could not have been timely presented in Appellants' Appeal Brief. 37 C.F.R. § 41.41(b)(2) (2013). Therefore, we do not address this belated argument. *See also Ex parte Borden*, 93 USPQ2d 1473, 1474 (BPAI 2010) (Informative) (explaining that under the previous rules, which are similar to the current rules, "the reply brief [is not] an opportunity to make arguments that could have been made in the principal brief on appeal to rebut the Examiner's rejections, but were not.").

Accordingly, we sustain the Examiner's 35 U.S.C. § 103(a) rejection of claim 1. The rejection of independent claims 7 and 11, and dependent

claims 2–6 and 8–10, which are not argued separately, is sustained for similar reasons.

DECISION

We reverse the Examiner's decision rejecting claims 1–13 under 35 U.S.C. § 101.

We affirm the Examiner's decision rejecting claims 1–13 under 35 U.S.C. § 103(a).

No time period for taking any subsequent action in connection with this appeal may be extended under 37 C.F.R. § 1.136(a)(1)(iv).

AFFIRMED