UNITED STATES PATENT AND TRADEMARK OFFICE

UNITED STATES DEPARTMENT OF COMMERCE
United States Patent and Trademark Office
Address: COMMISSIONER FOR PATENTS
P.O. Box 1450
Alexandria, Virginia 22313-1450
www.uspto.gov

APPLICATION NO.	FILING DATE	FIRST NAMED INVENTOR	ATTORNEY DOCKET NO.	CONFIRMATION NO.
13/264,816	10/17/2011	Aarnoud Laurens Roest	81359596 US04	1039

65913 7590 11/02/2016
Intellectual Property and Licensing
NXP B.V.
411 East Plumeria Drive, MS41
SAN JOSE, CA 95134

EXAMINER
HUBER, ROBERT T

ART UNIT	PAPER NUMBER
2892	

NOTIFICATION DATE	DELIVERY MODE
11/02/2016	ELECTRONIC

Please find below and/or attached an Office communication concerning this application or proceeding.

The time period for reply, if any, is set in the attached communication.

Notice of the Office communication was sent electronically on above-indicated "Notification Date" to the following e-mail address(es):

ip.department.us@nxp.com

UNITED STATES PATENT AND TRADEMARK OFFICE

BEFORE THE PATENT TRIAL AND APPEAL BOARD

Ex parte AARNOUD LAURENS ROEST and
LINDA VAN LEUKEN-PETERS

Appeal 2015-005133
Application 13/264,816
Technology Center 2800

Before ADRIENE LEPIANE HANLON, CATHERINE Q. TIMM, and JAMES C. HOUSEL, *Administrative Patent Judges*.

PER CURIAM.

DECISION ON APPEAL[1]

Appellants[2] filed an appeal under 35 U.S.C. § 134 from the Examiner's decision rejecting claims 1–20. We have jurisdiction under 35 U.S.C. § 6(b).

We REVERSE.

---

[1] Our decision refers to Appellants' Specification filed July 9, 2013 (Spec.), the Final Office Action delivered November 13, 2014 (Final Act.), Appellants' Appeal Brief filed January 9, 2015 (Appeal Br.), the Examiner's Answer delivered March 24, 2015 (Ans.), and Appellants' Reply Brief filed April 9, 2015 (Reply Br.).

[2] Appellants identify the real party in interest as NXP B.V. Appeal Br. 1.

STATEMENT OF THE CASE

The subject matter on appeal relates to methods for fabricating an electronic component (*see, e.g.,* claim 1). Appellants disclose that metal-insulator-metal (MIM) capacitors using high-K dielectric materials have an important role for next generation Integrated Discretes (IDs) devices, such as capacitors, resistors, and ESD protection diodes. Spec. 1:14–17. A first processing stage of the method for fabricating the electronic component is shown in Figure 1 of Appellants' disclosure and is reproduced below.

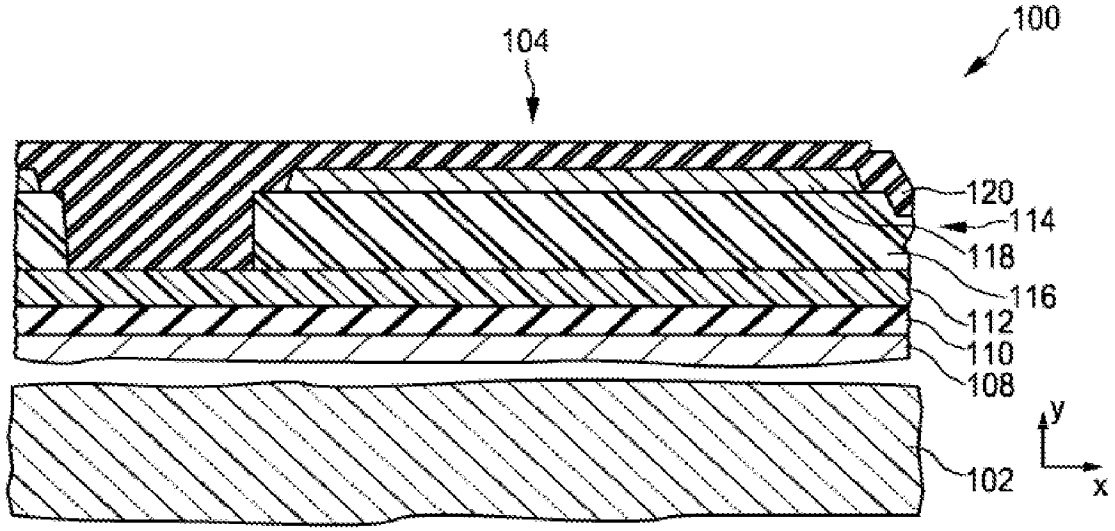

FIG. 1

Figure 1 depicts an electronic component at a first processing stage

Appellants disclose an electronic component **104**[3] including a substrate **102** upon which a titanium oxide (TiO_2) layer **108**, a bottom barrier layer **110**, a bottom electrode **112**, and a capacitor dielectric **116** are

[3] Throughout this Opinion, for clarity, we present labels to elements in figures in bold font, regardless of their presentation in the original document.

deposited. Spec. 7:8–9, 22–30. A top electrode **118** is then deposited to provide a capacitor structure **114**, upon which a first cover layer **120** is placed. *Id.* at 8:1–4.

Appellants disclose a second cover layer with a low dielectric constant can be deposited on the first cover layer **120** so a well-controlled and highly accurate resistor may be manufactured. *Id.* at 8:14–19. However, because the second cover layer is normally deposited under hydrogen-rich conditions, oxidized lead of the first cover layer **120** is reduced, which produces lead particles on the surface of the first cover layer **120**. *Id.* at 3:4–9 and 8:24–30. The lead particles create a rough surface upon which the second cover layer is to be deposited, which leads to poor results when a resistor layer is subsequently deposited. *Id.* at 8:19–22 and 8:33–9:2. To address this issue, Appellants disclose thinning the first cover layer **120**. *Id.* at 3:9–11. A second processing stage of the method for fabricating the electronic component is shown in Figure 2 of Appellants' disclosure and is reproduced below.

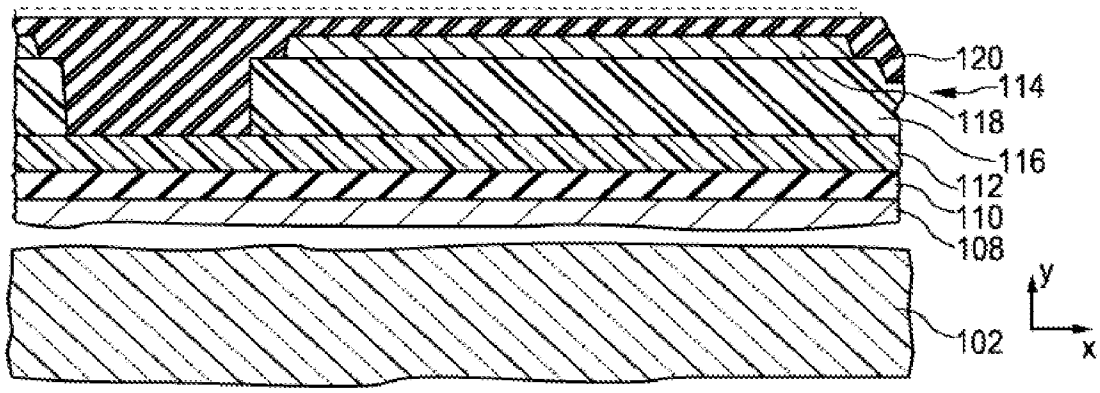

FIG. 2

Figure 2 depicts the electronic component at a second processing stage

As indicated by the dashed lines in Figure 2, the first cover layer **120** is thinned, such as by 10 to 40 nm. Spec. 9:3–9. The thinning operation may be achieved via a sputtering operation or an etching process, such as a wet etch process using nitric or hydrochloric acid. *Id.* at 5:8–14 and 9:9–11. Appellants disclose the thinning operation removes more than a proportional amount of lead so the first cover layer **120** is left lead-poor. *Id.* at 3:11–13. As a result, growth of structures that would negatively affect the structure and reliability of a resistor layer are suppressed during fabrication of a second cover layer. *Id.* at 3:13–16.

Independent claim 1 is illustrative and is reproduced below from the Claims Appendix of the Appeal Brief.[4] The limitations at issue are italicized.

> 1. A method for fabricating an electronic component, the method comprising:
>
> fabricating, on a substrate, at least one integrated MIM capacitor having a top capacitor electrode, and a bottom capacitor electrode at a smaller distance from the substrate than the top capacitor electrode;
>
> fabricating an electrically insulating first cover layer on the top capacitor electrode, wherein the first cover layer at least partly covers the top capacitor electrode and includes a lead-containing dielectric material;
>
> *thinning the first cover layer, wherein the thinning step removes a more than proportional amount of lead from the lead-containing dielectric material such that the lead-containing dielectric material has a lower concentration of lead after the thinning step than before the thinning step*;
>
> fabricating an electrically insulating second cover layer on the first cover layer, wherein the second cover layer at least partly

[4] Appeal Br. 19.

> covers the first cover layer and has a dielectric permittivity smaller than that of the first cover layer; and
>
> fabricating an electrically conductive resistor layer on the second cover layer, wherein the resistor layer has a defined ohmic resistance.

The claims on appeal stand rejected as follows:

(1) claims 1, 3–8, 10–12, 14–17, and 19 under 35 U.S.C. § 103(a) as unpatentable over the combination of Evans[5] in view of Mori;[6]

(2) claims 9 and 18 under 35 U.S.C. § 103(a) as unpatentable over the combination of Evans and Mori and further in view of Zelner;[7]

(3) claim 13 under 35 U.S.C. § 103(a) as being unpatentable over the combination of Evans and Mori and further in view of Goldberger;[8]

(4) claim 20 under 35 U.S.C. § 103(a) as being unpatentable over the combination of Evans and Mori and further in view of Joehren;[9] and

(5) claims 1, 2, 4–8, 10–12, 14–17, and 19 under 35 U.S.C. § 103(a) as being unpatentable over the combination of Evans in view of Ma.[10]

---

[5] Evans et al., US 5,920,453 A, issued July 6, 1999 ("Evans").
[6] Mori et al., US 6,384,440 B1, issued May 7, 2002 ("Mori").
[7] Zelner et al., US 2008/0001292 A1, published January 3, 2008 ("Zelner").
[8] Goldberger et al., US 2003/0030125 A1, published February 13, 2003 ("Goldberger").
[9] Roest et al., WO 2008/028660 A2, published March 13, 2008 ("Joehren"). Although Roest is the first named inventor, the Examiner refers to WO 2008/028660 as "Joehren." Final Act. 18. For consistency, we refer to WO 2008/028660 as "Joehren."
[10] Ma et al., US 6,281,535 B1, issued August 28, 2001 ("Ma").

ANALYSIS

The dispositive issue on appeal is whether the Examiner reversibly erred in finding that the combination of Evans and Mori and the combination of Evans and Ma disclose thinning a first cover, "wherein the thinning step removes a more than proportional amount of lead from the lead-containing dielectric material such that the lead-containing dielectric material has a lower concentration of lead after the thinning step than before the thinning step," as recited in claim 1.

In this regard, the Examiner finds, *inter alia*, Evans discloses a method for fabricating an electronic component in which a MIM capacitor is manufactured and an electrically insulating first cover layer including a lead-containing dielectric material is fabricated on top of the capacitor, citing layer 30 of Evans. Final Act. 3 and 12. The Examiner finds Evans discloses "thinning the first cover layer, wherein the thinning step removes a more than proportional amount of lead from the lead-containing dielectric material." *Id.* In this regard, the Examiner finds Evans teaches that the first cover layer is "thinned from the sides," and that, because the first cover layer is made of a lead-containing dielectric material, this removal of the sides of the first cover layer "necessarily removes an amount of lead from the [first cover layer.]" *Id.* Nonetheless, the Examiner acknowledges Evans does not disclose that the material of the first cover layer has a lower concentration of lead after the thinning step than before the thinning step. *Id.* at 4 and 13.

The Examiner finds Mori discloses a first cover layer including a lead-containing dielectric material that is thinned via a wet etching operation using nitric acid. *Id.* at 4–5. The Examiner finds Ma discloses thinning a lead-containing dielectric material by using a sputter etch-back process. *Id.*

at 13. The Examiner concludes it would have been obvious to modify Evans in view of Mori or Ma and finds the process of Evans, as modified by Mori or Ma, would be substantially identical to Appellants' process. *Id.*at 5 and 13–14. In view of this, the Examiner finds the process of Evans, as modified by Mori or Ma, would inherently remove more than a proportional amount of lead from the lead-containing dielectric material of the first cover layer so the material has a lower concentration of lead after the thinning step, as recited in claim 1. *Id.* at 5–6 and 14.

Appellants contend that the Examiner erroneously assumes that "thinning" is the same as removal of more than a proportional amount of lead, and therefore the prior art fails to teach removal of more than a proportional amount of lead. Appeal Br. 5. Appellants argue that because the top surface of the first cover layer has most of the Pb particles in their invention, the thinning step removes these particles leaving a thinned first cover layer that has a lower percentage of lead. *Id.* Appellants submit that Mori and Ma are silent to the removal of more than a proportional amount of lead. *Id.* at 5 and 11. Appellants thus contend Evans as modified by Mori or Ma would not thin a first cover layer such that the thinning operation "removes a more than proportional amount of lead from the lead-containing dielectric material" of the first cover layer such that the lead-containing dielectric material has a lower concentration of lead after the thinning step than before the thinning step," as recited in claim 1. *Id.* at 5–6, 11; Reply Br. 1–3.

We have considered the respective positions articulated by the Examiner and Appellants, and find a preponderance of the evidence favors Appellants. As an initial matter, it is necessary to construe the claim 1

recitation, "thinning the first cover layer, wherein the thinning step removes a more than proportional amount of lead from the lead-containing dielectric material such that the lead-containing dielectric material has a lower concentration of lead after the thinning step than before the thinning step."[11] It is axiomatic that during examination proceedings, claims are given their broadest reasonable interpretation consistent with the specification. *In re ICON Health & Fitness, Inc.,* 496 F.3d 1374, 1379 (Fed. Cir. 2007); *In re Am. Acad. of Sci. Tech. Ctr.*, 367 F.3d 1359, 1364 (Fed. Cir. 2004). The broadest reasonable interpretation construes the meaning of the words of the claim in their ordinary usage as they would be understood by one of ordinary skill in the art, taking into account any definitions or enlightenment contained in the written description of Appellants' Specification. *In re Morris*, 127 F.3d 1048, 1054 (Fed. Cir. 1997). "[T]he specification 'is always highly relevant to the claim construction analysis. Usually, it is dispositive; it is the single best guide to the meaning of a disputed term.'" *Phillips v. AWH Corp.*, 415 F.3d 1303, 1315 (Fed. Cir. 2005) (en banc).

Appellants' Specification describes thinning of the first cover layer as leading "to a more than proportional removal of the lead" of the first cover layer and "[d]ue to this effect the top of the *remaining* first cover layer is lead poor" (emphasis added). Spec. 3:11–13. The Specification further states the first cover layer may have "a thickness of between 90 and 300 nm,

[11] "[N]ot unlike a determination of infringement, a determination of anticipation, as well as obviousness, involves two steps. First is construing the claim, . . . followed by, in the case of anticipation or obviousness, a comparison of the construed claim to the prior art." *Key Pharms. Inc. v. Hercon Labs. Corp.*, 161 F.3d 709, 714 (Fed. Cir. 1998).

after the thinning" and that the first cover layer may be "thinned by approximately 10 to 40 nm," as depicted in Figure 2. *Id.* at 4:32–33 and 9:3–6. Moreover, Figure 1 depicts the first cover layer **120** as having an initial thickness, which is subsequently reduced by the thinning operation, as indicated by the dashed lines of Figure 2 that indicate an as-deposited thickness and indicated by the solid lines that indicate the thickness after the thinning operation. *Id.* at 9:6–9.

In view of Appellants' disclosure, we interpret "thinning the first cover layer, wherein the thinning step removes a more than proportional amount of lead from the lead-containing dielectric material such that the lead-containing dielectric material has a lower concentration of lead after the thinning step than before the thinning step" as meaning reducing the thickness of the first cover layer so a portion of the thickness of the first cover layer remains. Further, because the Appellants' disclosure does not describe the thinning operation as selectively treating specific areas of the first cover layer, we interpret the language "thinning the first cover layer" to require thinning the entirety of the top surface of the first cover layer.

With this claim interpretation in mind, we turn to the disclosures of Evans, Mori, and Ma. Evans discloses a ferroelectric capacitor. Evans 1:6–7. Figure 4 of Evans is reproduced below.

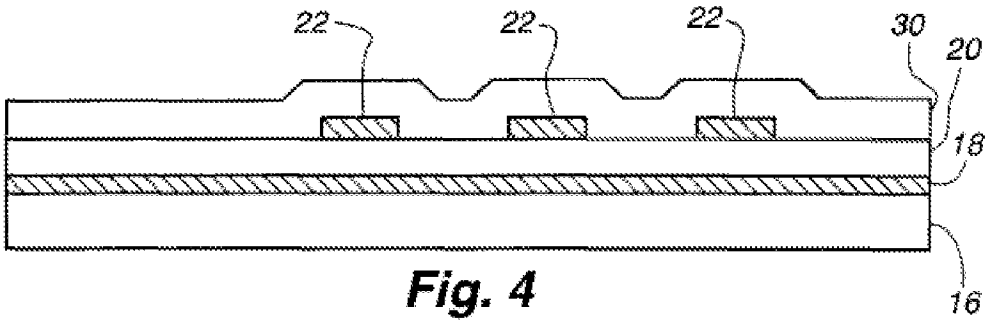

Fig. 4

Figure 4 depicts manufacture of a capacitor

As shown in Figure 4, a layer **16** of glass is deposited onto a substrate (not shown), a platinum bottom electrode layer **18** is deposited on the glass layer **16**, a first ferroelectric layer **20** is deposited on the bottom electrode layer **18**, and a platinum top electrode layer **22** is subsequently deposited on the first ferroelectric layer **20**. Evans 4:66–5:23. The top electrode layer **22** is etched to form individual top electrodes. *Id.* at 5:32–34. A second ferroelectric layer **30** is deposited over the first ferroelectric layer **20**. *Id.* at 5:37–40. As shown in Figure 5, reproduced below, the second ferroelectric layer **30** is then etched so there is a reasonable overlap with top electrodes **22**. *Id.* at 5:53–57.

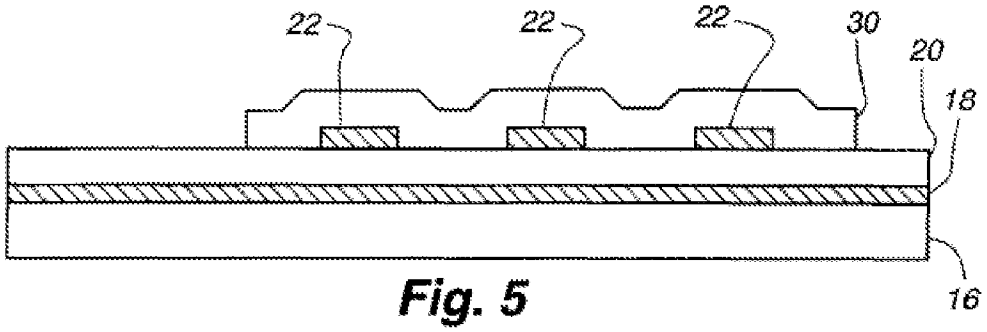

Figure 5 depicts a subsequent manufacturing step for a capacitor

The Examiner finds Evans' second ferroelectric layer **30** is a first cover layer and cites the etching step described at column 5, lines 53–57 of Evans as a thinning operation for the second ferroelectric layer **30**. Final Act. 3. However, as the Examiner finds, the etching process disclosed by Evans results in a removal of portions of the second ferroelectric layer **30**.

In particular, the sides of the second ferroelectric layer **30** lateral to the portion of the second ferroelectric layer **30** overlapping the top electrodes **22** are completely removed, as shown in Evans, Figures 4 and 5. The Examiner acknowledges this in the Answer by stating "[t]he Examiner submits that Evans discloses with respect to figure 5 that *the side portions of the first cover layer 30 are removed*" (emphasis added). Ans. 4. Evans' etching process does not reduce the thickness of the second ferroelectric layer **30** so a portion of the second ferroelectric layer **30** remains, as required by claim 1.

In spite of this teaching, the Examiner says it would have been obvious to remove the amount of the first cover layer recited in claim 4 as a matter of determining the workable or optimum range for the etching process to address the amount of layer 30 removed by the etching process. Ans. 4–5. However, reducing a thickness of a layer (so only the amount removed in claim 4 is removed to leave a portion behind) is not the purpose of Evans's etching process. In other words, the removal amount range of claim 4, or any range that results in thinning without complete thickness removal, is not within the workable or optimum range for Evans's etching process.

In addition, as Appellants argue, Mori and Ma fail to remedy the deficiency of the etching process of Evans. Mori discloses a ferroelectric memory. Mori 1:9. As shown in Figure 5G, reproduced below, the complete thickness of a portion of ferroelectric film **10** formed on an electrode **9** is removed by wet etching to thereby form a contact formation **22**. Mori 8:48–54. Mori discloses using a wet etching solution including hydrofluoric and nitric acid to etch the ferroelectric film **10** and make the contact formation **22**. *Id.* at col. 8, ll. 52–54.

Fig. 5G

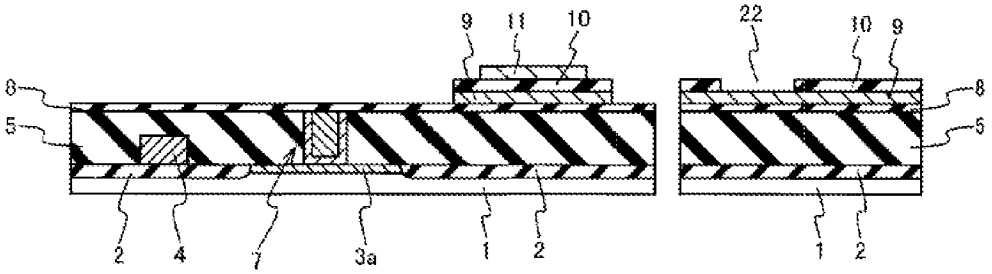

Figure 5G depicts a manufacturing step for a ferroelectric memory

Ma discloses a three-dimensional ferroelectric capacitor. Ma 1:7–9. As depicted in Ma, Figure 12, reproduced below, portions of layers **80**, **82**, **84**, and **86** are removed via a chemical mechanical polishing (CMP) process or via a sputter etch-back process, leaving portions **50**, **26**, **28**, **30** behind. Ma 7:35–39.

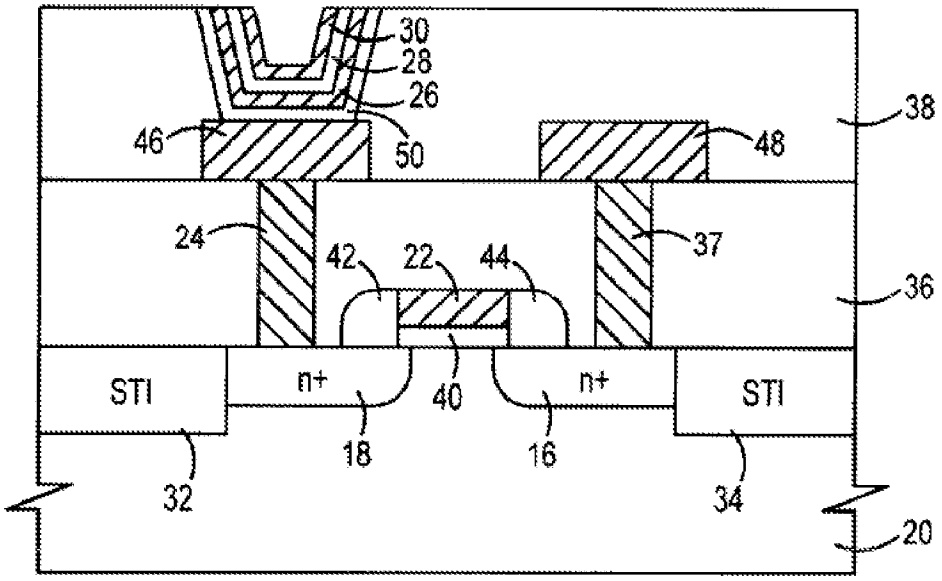

FIG. 12

Figure 12 illustrates a step of a manufacturing process for a capacitor

In view of the above, Mori and Ma disclose the removal of portions of at least one layer, not the thinning of a layer so a portion of the layer's thickness remains, as required by claim 1. In addition, the Examiner fails to direct our attention to any disclosure in either Mori or Ma in support of the finding that these references teach removing a more than proportional amount of lead as recited in claim 1. Therefore, Evans as modified by Mori or Ma does not disclose or suggest thinning a first cover layer, as recited by claim 1. As a result, the record does not support the Examiner's finding that the combination of Evans and Mori and the combination of Evans and Ma disclose thinning a first cover, "wherein the thinning step removes a more than proportional amount of lead from the lead-containing dielectric material such that the lead-containing dielectric material has a lower concentration of lead after the thinning step than before the thinning step."

For the reasons set forth above, and in Appellants' Appeal and Reply Briefs, the § 103 rejections over the combination of Evans and Mori and the combination of Evans and Ma are not sustained.

The remaining § 103 rejections of claims 9, 13, 18, and 20 over various combinations of Evans, Mori, Zelner, Goldberger, and Joehren suffer from the same deficiencies as the § 103 rejections of claim 1. Although the remaining § 103 rejections include Zelner, Goldberger, and Joehren as additional prior art references, the Examiner does not rely on Zelner, Goldberger, or Joehren to remedy the above-discussed deficiencies in the combination of Evans and Mori or the combination of Evans and Ma.

Therefore, we also do not sustain the Examiner's § 103 rejections of claims 9, 13, 18, and 20.

DECISION

On the record before us and for the reasons given in Appellants' Appeal and Reply Briefs, we *reverse* the Examiner's § 103 rejections.

REVERSED