UNITED STATES PATENT AND TRADEMARK OFFICE

UNITED STATES DEPARTMENT OF COMMERCE
United States Patent and Trademark Office
Address: COMMISSIONER FOR PATENTS
P.O. Box 1450
Alexandria, Virginia 22313-1450
www.uspto.gov

APPLICATION NO.	FILING DATE	FIRST NAMED INVENTOR	ATTORNEY DOCKET NO.	CONFIRMATION NO.
13/122,844	08/03/2011	Takayuki Shimada	920_270	3099

25191 7590 11/03/2016
BURR & BROWN, PLLC
PO BOX 7068
SYRACUSE, NY 13261-7068

EXAMINER
HAN, JASON

ART UNIT	PAPER NUMBER
2875	

MAIL DATE	DELIVERY MODE
11/03/2016	PAPER

Please find below and/or attached an Office communication concerning this application or proceeding.

The time period for reply, if any, is set in the attached communication.

UNITED STATES PATENT AND TRADEMARK OFFICE

BEFORE THE PATENT TRIAL AND APPEAL BOARD

Ex parte TAKAYUKI SHIMADA, FUMIHIRO ARAKAWA, SATOSHI GOISHIHARA, HIROSHI KOJIMA, RUNA NAKAMURA, AKINOBU USHIYAMA, SATOKO MAENISHI, KAZUKI TANAKA, and AKIKO TOMITA[1]

Appeal 2015-005037
Application 13/122,844
Technology Center 2800

Before ADRIENE LEPIANE HANLON, CHRISTOPHER C. KENNEDY, and DEBRA L. DENNETT, *Administrative Patent Judges*.

KENNEDY, *Administrative Patent Judge*.

DECISION ON APPEAL

This is an appeal under 35 U.S.C. § 134(a) from the Examiner's decision to reject claims 1–4 and 9–18. We have jurisdiction under 35 U.S.C. § 6(b).

We REVERSE.

---

[1] According to the Appellants, the real party in interest is Dai Nippon Printing Co., Ltd. App. Br. 1.

BACKGROUND

The subject matter on appeal relates to an optical sheet capable of changing the travel direction of light. *E.g.*, Spec. ¶ 1; Claim 1. Claim 1 is reproduced below from page 15 (Claims Appendix) of the Appeal Brief:

1. An optical sheet comprising:

   a sheet-like base layer;

   a light control layer having unit shaped elements arranged in an arrangement direction parallel to a sheet surface of the base layer, each unit shaped element extending linearly in a direction intersecting the arrangement direction of the unit shaped elements; and

   a light diffusing layer disposed between the base layer and the light control layer,

   wherein the light control layer further includes a sheet-like support layer adjacent to the light diffusing layer, and the unit shaped elements are disposed on a surface, on a side opposite to the light diffusing layer, of the sheet-like support layer,

   wherein a surface, on a side of the light control layer, of the light diffusing layer is a rough surface having raised portions, and the raised portions are disposed at finer pitch than the unit shaped elements;

   wherein the light diffusing layer has a binder resin portion and particles dispersed in the binder resin portion, and

   wherein the particles contained in the binder resin portion include an aggregate of aggregated single particles.

REJECTIONS ON APPEAL

1. Claims 1, 4, 11, 12, and 15 stand rejected under 35 U.S.C. § 102(b) as anticipated by Kanetani et al. (JP 2006-220995 A, published Aug. 24, 2006).

2. Claims 2 and 3 stand rejected under 35 U.S.C. § 103(a) as unpatentable over Kanetani in view of Iwata et al. (US 2008/0174875 A1, published July 24, 2008).

3. Claims 9 and 10 stand rejected under 35 U.S.C. § 103(a) as unpatentable over Kanetani.

4. Claims 13, 14, 16, 17, and 18 stand rejected under 35 U.S.C. § 103(a) as unpatentable over Kanetani in view Kashima et al. (US 5,995,288, issued Nov. 30, 1999).

ANALYSIS

This case hinges on construction of the claim term "aggregated single particles," which appears in each claim either expressly or through claim dependencies. In rejecting claim 1 as anticipated by Kanetani, the Examiner finds that Figure 2 of Kanetani discloses an optical sheet comprising an "aggregate of aggregated single particles" in layer 2. *See* Final Act. 3. Figure 2 of Kanetani is reproduced below:

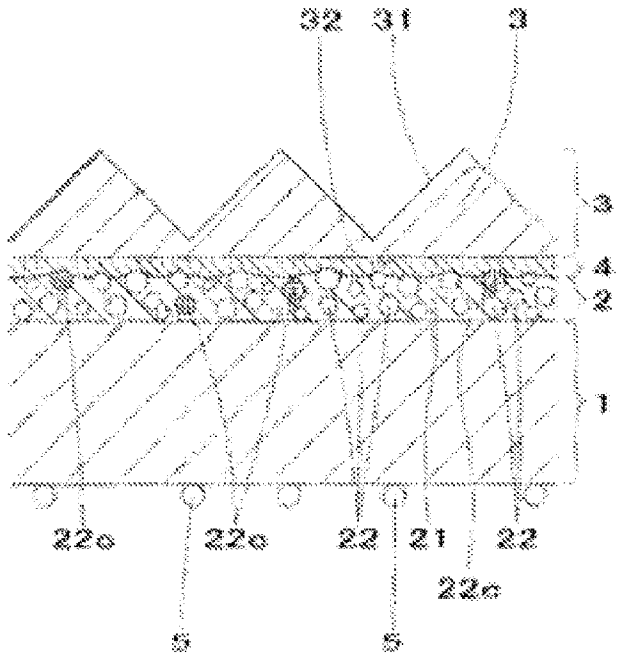

Figure 2 depicts a cross-sectional view of Kanetani's optical sheet, including optical diffusion particles 22 and light diffusion particles 22c. *See* Kanetani ¶¶ 19, 27.

The Appellants persuasively argue that Kanetani's particles 22 and 22c are individual beads, rather than aggregated collections of two or more beads. *See* App. Br. 7–9. The Examiner does not appear to dispute that diffusion particles 22 and 22c are individual beads. The Examiner nevertheless finds that Kanetani's individual beads 22 and 22c constitute "aggregated single particles" by construing the term "aggregate" to mean "a sum, mass, or assemblage of particulars." *E.g.*, Ans. 2. The Examiner appears to determine that the term "aggregated single particles" reads on embodiments disclosing a plurality of individual particles, such as Kanetani's Figure 2. *See id.* at 3 ("[I]t is noted that 'aggregated' was interpreted as an adjective modifying 'single particles', whereby it was defined similarly as above to aggregate, meaning 'a sum, mass, or assemblage of particulars'.").

We reverse the rejection. The Examiner's interpretation of "aggregated single particles" is not consistent with the Specification or with the plain meaning of the word "aggregated." The plain meaning of "aggregated" is "formed by the conjunction or collection of particulars into a whole mass or sum; total; combined." *See* http://www.dictionary.com/browse/aggregated (last accessed Oct. 31, 2016). That definition is somewhat different from the definition of the term "aggregate" provided by the Examiner, *see* Ans. 2, and it implies that the term "aggregated single particles" refers to single particles that have been combined, i.e., aggregated, to form a unitary mass.

That understanding of the term is also consistent with the Specification. The Specification distinguishes between individual single particles and aggregated single particles. Figures 5A and 5B appear below:

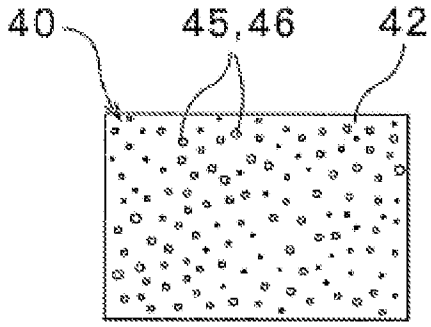

Fig. 5A

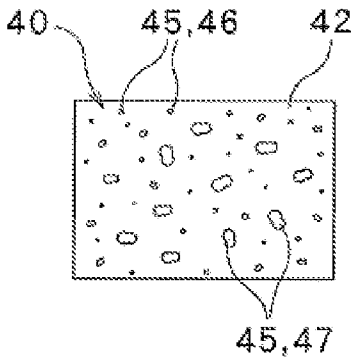

Fig. 5B

Figure 5A depicts a light diffusing layer having light diffusing particles 45 in the form of "single particles 46." *See* Spec. ¶¶ 55, 57. Figure 5B depicts a light diffusing layer having light diffusing particles 45 in the form of both single particles 46 and "aggregates 47 of at least two single particles 46." *See id.* ¶ 57. Moreover, the Appellants' Specification expressly attributes benefits to the claimed aggregated particles in comparison to "a conventional known layer containing solely single particles 46." *See id.* ¶ 61. Thus, it is clear that the term "aggregated single particles" refers to at least two single particles that have been combined into one particle, and that it does not read on a plurality of single particles, which the Specification expressly distinguishes.

On this record, the Examiner's anticipation analysis fails to establish that Kanetani teaches "aggregated single particles" under the proper construction of that term, as set forth above.[2] The Examiner's reliance on

[2] The Examiner makes no express findings as to whether any of Kanetani's

Iwata and Kashima in connection with certain other grounds of rejection fails to remedy the error identified above. Accordingly, we must reverse the Examiner's rejection as to all claims on appeal.

CONCLUSION

We REVERSE the Examiner's rejections of claims 1–4 and 9–18.

REVERSED

---

individual beads 22 would have been expected to be in contact with each other, or whether any such contact amongst individual beads might affect the anticipation analysis.