UNITED STATES PATENT AND TRADEMARK OFFICE

UNITED STATES DEPARTMENT OF COMMERCE
United States Patent and Trademark Office
Address: COMMISSIONER FOR PATENTS
P.O. Box 1450
Alexandria, Virginia 22313-1450
www.uspto.gov

APPLICATION NO.	FILING DATE	FIRST NAMED INVENTOR	ATTORNEY DOCKET NO.	CONFIRMATION NO.
12/907,641	10/19/2010	PABLO VALENCIA JR.	P013525-GMVE-LCH/003.0806	2378

70422 7590 10/27/2016
LKGlobal (GM)
7010 E. COCHISE ROAD
SCOTTSDALE, AZ 85253

EXAMINER
DIGNAN, MICHAEL L

ART UNIT	PAPER NUMBER
1723	

NOTIFICATION DATE	DELIVERY MODE
10/27/2016	ELECTRONIC

Please find below and/or attached an Office communication concerning this application or proceeding.

The time period for reply, if any, is set in the attached communication.

Notice of the Office communication was sent electronically on above-indicated "Notification Date" to the following e-mail address(es):

docketing@lkglobal.com

UNITED STATES PATENT AND TRADEMARK OFFICE

BEFORE THE PATENT TRIAL AND APPEAL BOARD

Ex parte PABLO VALENCIA, JR.
and KANTHASAMY ELANKUMARAN

Appeal 2015-004836
Application 12/907,641
Technology Center 1700

Before KAREN M. HASTINGS, GEORGE C. BEST, and
N. WHITNEY WILSON, *Administrative Patent Judges*.

WILSON, *Administrative Patent Judge*.

DECISION ON APPEAL

Appellants[1] appeal under 35 U.S.C. § 134 from the Examiner's April 11, 2014 decision finally rejecting claims 1–20. We have jurisdiction over the appeal under 35 U.S.C. § 6(b).

We reverse.

---

[1] The real party in interest is GM Global Technology Operations, LLC (Appeal Br. 3).

CLAIMED SUBJECT MATTER

Appellants' invention is directed to battery assemblies for powering electrical systems in alternative fuel vehicles (Spec. 1). According to the Specification, the battery modules within these assemblies include cooling systems for improved temperature regulation (*id.* at 1–2). Claim 1 is representative and is reproduced below from the Claims Appendix of the Appeal Brief (*key claim limitation in italics*):

> 1. A battery module, comprising:
>
> *a first battery cell;*
>
> *a heat transfer plate contacting the first battery cell* and defining a perimeter, the heat transfer plate having a first thickness;
>
> a heat transfer fin extending from the perimeter of the heat transfer plate, the heat transfer fin having a second thickness that is greater than the first thickness; and
>
> a fluid conduit coupled to the heat transfer fin, whereby, during operation, heat is transferred from the first battery cell, to the heat transfer plate, to the heat transfer fin, and to the fluid conduit.

Appeal Br. 34 (Claims App.).

REJECTIONS

(1) Claims 1–3, 6, 7, and 13–19 are rejected under 35 U.S.C. § 102(a) as anticipated by Hirsch.[2]

---

[2] Hirsch et al., DE 10 2009 014954 A1, published July 10, 2010. Hirsch is a German language document, so that the Examiner relies on an English-language counterpart Hirsch, US 2012/0171543 A1, published July 5, 2012. Citations to Hirsch will reference the U.S. publication.

(2) Claims 8, 9, 11, and 12 are rejected under 35 U.S.C. § 103(a) as unpatentable over Hirsch.

(3) Claim 10 is rejected under 35 U.S.C. § 103(a) as unpatentable over Hirsch in view of Pode.[3]

(4) Claims 4, 5, and 20 are rejected under 35 U.S.C. § 103(a) as unpatentable over Hirsch in view of Okajima.[4]

DISCUSSION

Figure 1a of Hirsch, which illustrates an energy storage device in contact with a device for heat transfer, is reproduced below:

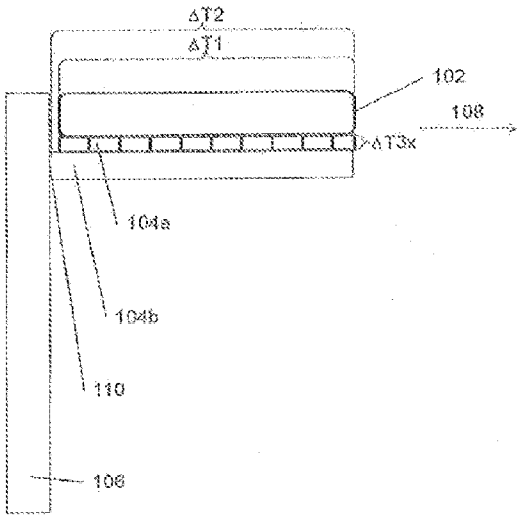

FIG 1a

Figure 1a illustrates details of an energy storage device in which variable heat transfer between battery cell **102** and cooling fin **104b** is facilitated through materials with different contact resistances, including film **104a** and cooling plate **106** (Spec. ¶¶ 52 and 53).

---

[3] Pode, US 2004/0194489 A1, published Oct. 7, 2004.

[4] Okajima et al., JPH 08321329 A, published Dec. 3, 1996. Okajima is in Japanese. We shall follow the Examiner and Appellants by referring to a machine translation that was made of the record in this appeal on Nov. 5, 2013.

It is well established that "[a] prior art reference anticipates a patent claim under 35 U.S.C. § 102(b) if it discloses every claim limitation." *In re Montgomery*, 677 F.3d 1375, 1379 (Fed. Cir. 2012) (citing *Verizon Servs. Corp. v. Cox Fibernet Va., Inc.*, 602 F.3d 1325, 1336–37 (Fed. Cir. 2010)). The anticipatory reference, furthermore, must disclose the claimed invention "such that a skilled artisan could take its teachings in combination with his own knowledge of the particular art and be in possession of the invention." *In re Graves*, 69 F.3d 1147, 1152 (Fed. Cir. 1995) (quoting *In re LeGrice*, 301 F.2d 929, 936 (CCPA 1962)).

In this instance, Appellants argue[5] that the Examiner has failed to show that Hirsch discloses a heat transfer plate contacting the first battery cell because "[t]he referenced heat transfer plate [**104b**] is separated from the battery cell [**102**] by an intermediate layer", i.e., film **104a** (Appeal Br. 18; *see also* Hirsch Fig. 1a).

The Examiner, however, finds that this claim limitation reads on Hirsch's disclosure of film **104a** because the Examiner interprets "the entire structure, **104a** and **104b**, to be a 'heat transfer plate' as required by the instant language" (Ans. 13). According to the Examiner, this interpretation is reasonable because the Specification does not define a heat transfer plate "to be composed of a single homogeneous material" (*id.*). The Examiner concludes that it is "within the scope of the claim language, to interpret a cooling plate composed of a material with a large thermal mass and covered

[5] Appellants make a number of other arguments urging reversal of the rejections. We need not and do not address those arguments.

in a thin thermally conductive coating to be interpreted as a 'heat transfer plate[]'" (*id.* at 13–14).

However, as noted by Appellants (Reply Br. 4), a skilled artisan would not consider film **104a** to be part of the claimed heat transfer plate because "[t]he arrangement of structure **104a** is designed to manipulate the thermal resistivity between the structure **104b** and [the] battery cell, including inhibiting the heat transfer" (*id.*, citing Hirsch ¶¶ 62; 63 (*see, e.g.,* "[F]ilm **104a** can be realized *with uniform contact resistance*" (emphasis added); *see also* Hirsch ¶ 58 (disclosing that heat transfer between the battery cell and cooling fin may be varied using films with different contact resistances). Thus, Appellants' arguments (Appeal Br. 18, Reply Br. 4) are persuasive that the evidence of record does not support the Examiner's finding that Hirsch's film **104a** is part of the claimed heat transfer plate in contact with the first battery cell. *Graves*, 69 F.3d at 1152.

Furthermore, the Examiner's reliance on giving the term "heat transfer plate" its "reasonable interpretation" to find that it reads on Hirsch's film **104a** (Ans. 13) is misplaced. During prosecution words in the claims under examination are given their broadest reasonable interpretation. *In re ICON Health & Fitness, Inc.*, 496 F.3d 1374, 1379 (Fed. Cir. 2007). In this instance, the Examiner has, instead, applied the broadest reasonable interpretation standard to the cited prior art.

Accordingly, because Hirsch does not disclose a heat transfer plate contacting the first battery cell, we find that the Examiner has erred in finding that Hirsch anticipates claims 1–3, 6, 7, and 13–19. *Montgomery*, 677 F.3d at 1379. The Examiner's findings in support of the obviousness

rejections of claims 4, 5, 8–12, and 20 do not address Hirsch's deficiency (*see*, Ans. 5–16). Therefore, we also reverse the obviousness rejections.

CONCLUSION

We REVERSE the rejection of claims 1–3, 6, 7, and 13–19 under 35 U.S.C. § 102(a) as anticipated by Hirsch.

We REVERSE the rejection of claims 8, 9, 11, and 12 under 35 U.S.C. §103(a) as unpatentable over Hirsch.

We REVERSE the rejection of claim 10 under 35 U.S.C. § 103(a) as unpatentable over Hirsch in view of Pode.

We REVERSE the rejection of claims 4, 5, and 20 under 35 U.S.C. § 103(a) as unpatentable over Hirsch in view of Okajima.

<u>REVERSED</u>