UNITED STATES PATENT AND TRADEMARK OFFICE

UNITED STATES DEPARTMENT OF COMMERCE
United States Patent and Trademark Office
Address: COMMISSIONER FOR PATENTS
P.O. Box 1450
Alexandria, Virginia 22313-1450
www.uspto.gov

APPLICATION NO.	FILING DATE	FIRST NAMED INVENTOR	ATTORNEY DOCKET NO.	CONFIRMATION NO.
13/018,013	01/31/2011	Matthew Donofrio	5308-1381	7782

65106 7590 11/14/2016
MYERS BIGEL, P.A.
P.O. BOX 37428
RALEIGH, NC 27627

EXAMINER
NADAV, ORI

ART UNIT	PAPER NUMBER
2811	

NOTIFICATION DATE	DELIVERY MODE
11/14/2016	ELECTRONIC

Please find below and/or attached an Office communication concerning this application or proceeding.

The time period for reply, if any, is set in the attached communication.

Notice of the Office communication was sent electronically on above-indicated "Notification Date" to the following e-mail address(es):

uspto@myersbigel.com

UNITED STATES PATENT AND TRADEMARK OFFICE

BEFORE
THE PATENT TRIAL AND APPEAL BOARD

Ex parte MATTHEW DONOFRIO,[1]
John Adam Edmond, James Ibbetson, David Todd Emerson,
Michael John Bergmann, Kevin Haberern, Raymond Rosado,
and Jeffrey Carl Britt

Appeal 2015-003587
Application 13/018,013
Technology Center 2800

Before MARK NAGUMO, CHRISTOPHER L. OGDEN, and JEFFREY R. SNAY, *Administrative Patent Judges*.

NAGUMO, *Administrative Patent Judge*.

DECISION ON APPEAL

Matthew Donofrio, John Adam Edmond, James Ibbetson, David Todd Emerson, Michael John Bergmann, Kevin Haberern, Raymond Rosado, and Jeffrey Carl Britt ("Cree") timely appeal

---

[1] The real party in interest is identified as Cree, Inc. ("Cree"). (Appeal Brief, filed 31 October 2014 ("Br."), 2.)

under 35 U.S.C. § 134(a) from the Final Rejection[2] of claims 1, 3–10, 16, 18–28, 62, and 64.[3] We have jurisdiction. 35 U.S.C. § 6. We reverse.

OPINION

A. Introduction[4]

The subject matter on appeal relates to "horizontal" white light emitting diodes ("LEDs") having oblique substrate sidewalls coated with a conformal phosphor layer comprising a phosphor having a specified average equivalent particle diameter, d50. The '013 Specification reveals that such LEDs provide relatively high brightness with relatively low angular variation. Moreover, a relatively high ratio of yellow phosphor to (more expensive) red phosphor may be used, resulting in a cost savings. (Spec. 12 [0051].)

As Slater[5] explains, white light may be produced from an ultraviolet light emitting LED by combining red, green, and blue light emitted by phosphors placed on or near the ultraviolet light emitting LED. (Slater, col. 3, ll. 28–44.) In particular, as shown in Slater Figure 1B (next page),

---

[2] Office action mailed 30 May 2014 ("Final Rejection"; cited as "FR").

[3] Remaining copending claims 11–15, 29–33, 35–39, 63, and 65 have been withdrawn from consideration (FR 1, § 5a), and are not before us.

[4] Application 13/018,013, *Horizontal light emitting diodes including phosphor particles*, filed 31 January 2011. We refer to the "'013 Specification," which we cite as "Spec."

[5] See n. 13, *infra*, for the complete citation. Slater is incorporated into the '013 Specification by reference. (Spec. 9 [0038].)

conventional white LED devices have a diode region **110**[6] on first face **100a** of a substrate **100**. Blue or ultraviolet light emitted from diode region **110**[7] is conducted out of the device through transparent substrate **100** and then through phosphor layer **120** on second face **100b** as well as vertical side faces **100c** and oblique side faces **100d**.

{Slater Figures 1B (left) and 2B (right) are shown below}

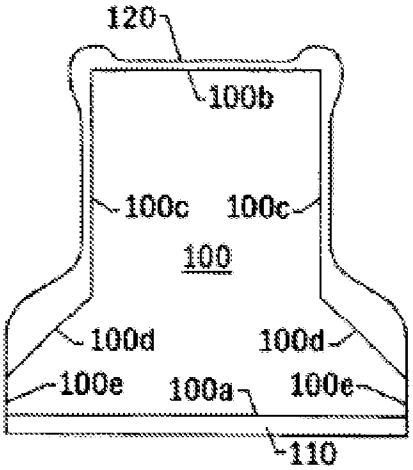

{Fig. 1B shows a prior art LED with diode layer **110** and vertical side walls **100c** coated with nonconformal phosphor layer **120**}

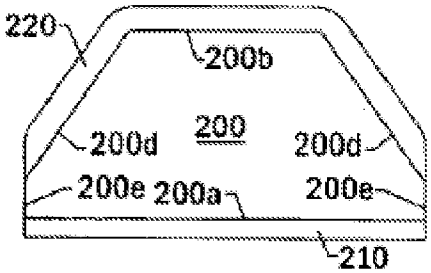

{Fig. 2B shows an LED with diode layer **210** and oblique sidewalls **200d** coated with conformal phosphor layer **220**}

According to Slater, it may be difficult to obtain sufficient coverage of phosphor coating **120** on vertical walls **100c** without excessive coating on

---

[6] Throughout this Opinion, for clarity, labels to elements are presented in bold font, regardless of their presentation in the original document.

[7] The nature of the diode region, i.e., whether "horizontal" (the anode and cathode ohmic contacts to the p-type layer and the n-type layer, respectively, extend along the first face of the diode region) (Spec. 1 [0004], 11 [0044]) or "vertical" (the anode and cathode ohmic contacts are on opposite faces of the diode region) (*id.* at 11 [0044]) does not appear to be critical to the operation of white light LEDs of the invention.

oblique portions **100d**; and still poor coverage on second face **100b** may be obtained. (Slater, col. 5, ll. 51–62.) As a result, too much blue emission from diode region **110** may be emitted through second face **100**, while too little yellow secondary emission may be transmitted through the excessively thick coating on face **100d**. (*Id.* at col. 5, l. 62, through col. 6, l. 6.) The practical effect is said to be reduced conversion efficiency and a large angular dependence of Color Correlated Temperature ("CCT"). (*Id.* at col. 6, ll. 6–9.) In contrast, the oblique sidewalls shown in Slater Figure 2B are said to permit a conformal coating, which is said to "produce a desired spectrum of light, while also allowing more radiant flux to be emitted from the phosphor-coated LED." (*Id.* at ll. 14–16.)

According to the '013 Specification, "[i]t is well known that larger phosphor particles are generally more efficient in light conversion than small sized phosphor particles." (Spec. 9 [0039].) However, the Specification explains, large phosphor particles may also have a lower light scattering efficiency than smaller phosphor particles which "may produce a high angular variation in Correlated Color Temperature (CCT), which is typical in white LEDs using large particulate size phosphor particles for brightness boost." (*Id.*) The variability of maximum change in CCT is referred to as "max delta CCT," or "max dCCt." (*Id.* at 20 [0076].)

Cree reports that, contrary to expectations, a conformal phosphor layer having phosphor particles limited to an average equivalent particle

diameter d50[8] of between about 10 μm and about 20 μm "provide[s] relatively high brightness with relatively low angular variation." (Spec. 10 [0040].)

Figure 1, reproduced below, illustrates an embodiment of the claimed light emitting diode **100**.

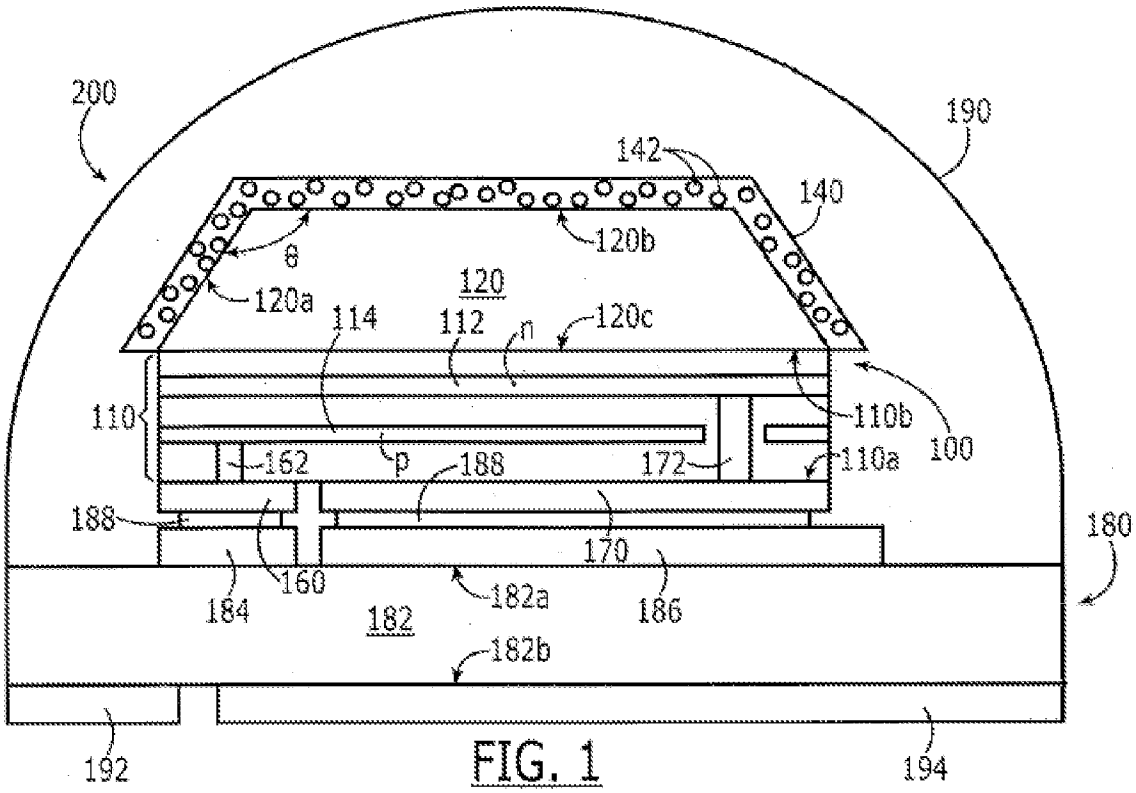

FIG. 1

{Fig. 1 shows packaged white LED **200** in cross section}

Active diode region **110** comprises first face **110a** and second face **110b**, between which are located n-type region **112** and p-type region **114**, which are connected by conductive vias **172** and **162**, respectively, to cathode ohmic contact **170** and anode contact **160**,

[8] The symbol "d50," denoting the "average equivalent particle diameter," indicates that 50 mass% of the particles have a smaller diameter. (Spec. 10, [0041].)

respectively, which lie in the plane of first face **110a**. Light emitted from diode region **110** travels through substrate **120** and excites, e.g., blue, yellow, and red phosphor particles **142** in conformal phosphor layer **140** on oblique faces **120a** and on outer face **120b** of substrate **120**. The mixed colors of the emitted light combine to form white light, which is gathered and transmitted to the external world by lens **190**.

Sole independent Claim 1 reads:

A light emitting diode [**100**] comprising:

a diode region [**110**] having first [**110a**] and second [**110b**] opposing faces and including therein an n-type layer [**112**] and a p-type layer [**114**];

an anode contact [**160**] that ohmically contacts the p-type layer [**114**] and extends on the first face [**110a**];

a cathode contact [**170**] that ohmically contacts the n-type layer [**112**] and that also extends on the first face [**110a**];

a transparent substrate [**120**] on the second face [**110b**],

the transparent substrate including

an inner face [**120c**] adjacent the second face [**110b**],

an outer face [**120b**] remote from the second face [**110b**] and

a sidewall [**120a**] that extends from the outer face [**120b**] to the inner face [**120c**]; and

a conformal layer [**140**]

that comprises *phosphor* [**142**] *having an average equivalent particle diameter d50 of between about 10μm and about 20μm*,

on the outer face [**120b**] a*nd extending on the sidewall* [**120a**] *oblique to the inner face* [**120c**].

(Claims App., Br. 15; some indentation, paragraphing, bracketed labels to Fig. 1, and emphasis added.)

The Examiner maintains the following ground of rejection[9]:

> Claims 1, 3–10, 16, 18–28, 62, and 64 stand rejected under 35 U.S.C. § 103(a) in view of the combined teachings of Donofrio,[10] Ishii,[11] Sakane,[12] and Slater.[13]

B. Discussion

Findings of fact throughout this Opinion are supported by a preponderance of the evidence of record.

As will be seen, we need focus only on the limitations recited in claim 1.

Cree contends first that the Examiner erred harmfully in concluding that it would have been prima facie obvious to combine the teachings of Donofrio regarding LED structures that "may incorporate wavelength conversion material such as a phosphor" (Donofrio 1 [0004], last sentence)

---

[9] Examiner's Answer mailed 28 November 2014 ("Ans.").

[10] Matthew Donofrio et al., *Semiconductor light emitting diodes having reflective structures and methods of fabricating same*, U.S. Patent Application Publication 2009/0283787 A1 (2009), now U.S. Patent No. 8,368,100 (5 February 2013), assigned to Cree, Inc., the real party in interest in this Appeal.

[11] Tsutomu Ishii et al., *White LED lamp, backlight, light emitting device, display device and illumination device*, U.S. Patent Application Publication 2011/0006334 A1 (2011), based on an application filed 19 February 2009, now U.S. Patent No. 8,471,283 (25 June 2013).

[12] Kenji Sakane et al., *Phosphor and manufacturing method for the same, and light source*, U.S. Patent No. 7,476,337 B2 (2009).

[13] David B. Slater, Jr., and Gerald H. Negley, *Phosphor-coated light emitting diodes including tapered sidewalls, and fabrication methods therefore*, U.S. Patent No. 6,853,010 B2 (2005) (assigned to Cree, Inc., the real-party-in-interest).

with the teachings of Slater regarding a conformal layer of phosphor on the outer face and oblique sidewalls of a substrate, wherein phosphor particles have an average equivalent particle diameter d50 of between about 10 μm and about 20 μm as disclosed by Ishii or Sakane. (Br. 3–6.)

Although the Examiner does overstate the teachings of Donofrio to the extent that Donofrio is found to teach that "a conformal phosphor layer can be incorporated into the LED structure" (FR 3, ll. 7–8), this error is harmless in context. Donofrio teaches an LED assembly with transparent substrate **120** having outer face **120b** and oblique side walls **120a** that extend from outer face **120b** to the inner face **120c**, as shown in Donofrio Figure 12, reproduced below.

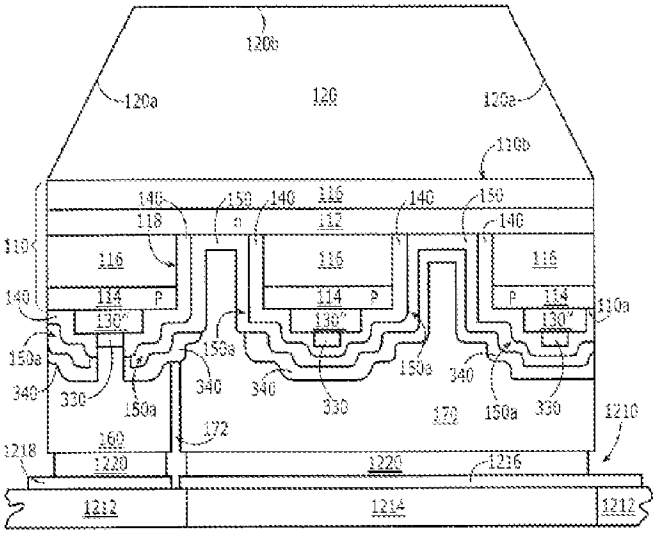

{Donofrio Fig. 12 shows a cross section of an LED mounted on a substrate}

The similarity between the shape of Donofrio's substrate **120** and the substrate **200** illustrated by Slater in Fig. 2B, *supra*, together with the similar disclosed optical function, would have suggested the application of a conformal coating even in the absence of Donofrio's express invitation to incorporate a wavelength conversion material into the LED.

As for the selection of phosphor particles having a d50 between about 10 μm and about 20 μm, the teachings of Ishii that the average grain size of phosphor powders should be greater than 10 μm to avoid lowered light extracting efficiency (Ishii 5 [0104]–[0106]) provides a sufficient reasonable expectation of successfully using particles in the range required by the claims. Similarly, the teachings of Sakane that d50 for phosphor particles should be 20 μm or less (Sakane, col. 9, l. 65, through col. 10, l. 10, cited by the Examiner in the Examiner's Answer (Ans., para. bridging 10–11) would have provided further reason to select particles within the required range.[14] The silence of Ishii and Sakane regarding oblique sidewalls (Br. 5) is of no moment, given that both Donofrio—and, more critically, Slater—teach oblique sidewalls, the latter emphasizing the improved spectral and radiant flux obtained by being able to coat oblique sidewalls with a conformal phosphor-containing layer.

Cree argues further that the Examiner erred in not giving sufficient weight to the evidence of unexpected results. (Br. 7–11.)

First, as shown in Figure 8, reproduced on the following page, when applied to substrates having vertical walls, the larger d50 = 15 μm phosphor particles provide a mean max dCCT of about 7500, compared to smaller d50 = 5.5 μm phosphor particles, which provide a mean max dCCT of about 3000. (Spec. 20 [0077].) This is consistent with the effect of larger scattering particles discussed in the '013 Specification and summarized *supra*.

---

[14] It has not escaped our notice that Sakane recommends a most preferred range of "3.0 μm or more and 15 μm or less" (Sakane, col. 10, ll. 17–18.)

{Figure 8 is shown below}

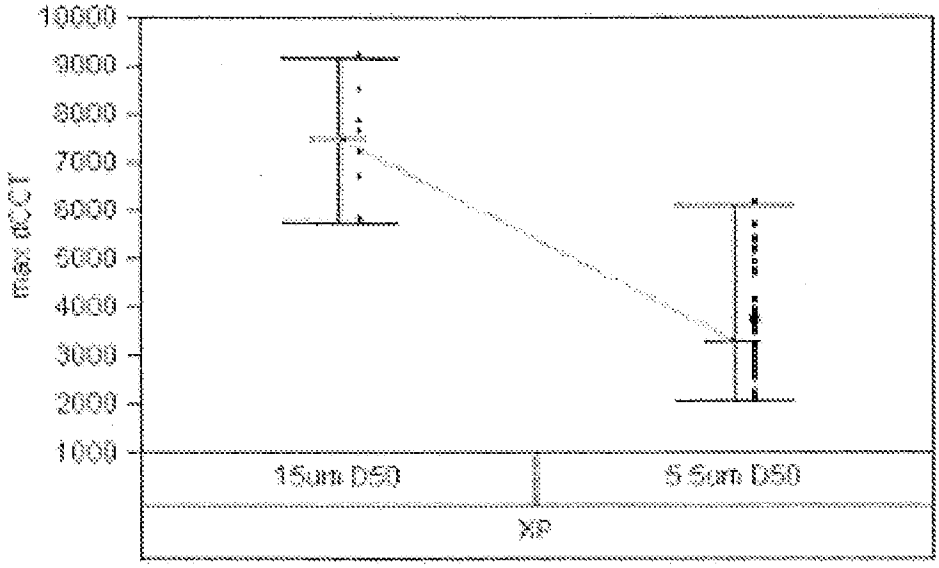

{left: XP LED with vertical sides, phosphor d50 = 15 μm}

{right: XP LED with vertical sides, phosphor d50 = 5 μm}

In contrast, as shown in Figure 7, below,

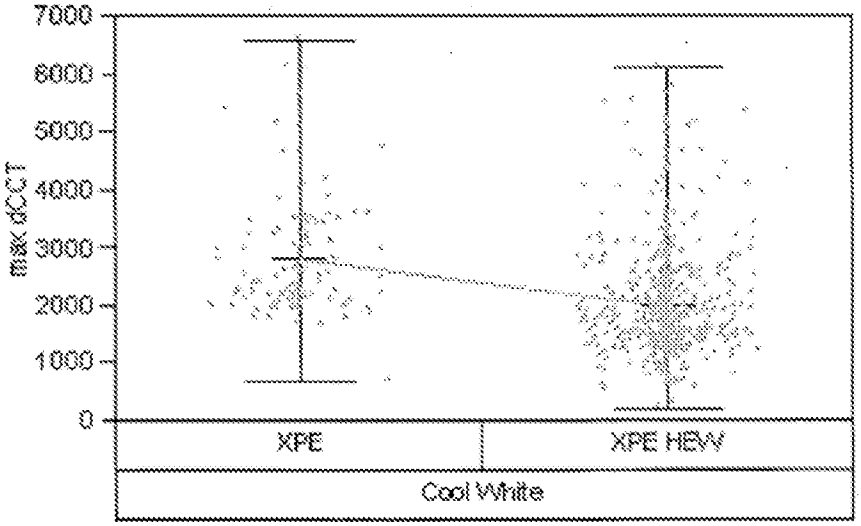

{left: XPE LED with vertical sides, phosphor d50 = 5.5 μm}

{right: XPE HEW LED with oblique sides, phosphor d50 = 15 μm}

relatively little variation in max dCCT is exhibited between XPE LEDs having vertical substrate walls and a phosphor coating with phosphor

particles having a d50 of about 5.5 μm (mean max dCCT of about 2800) compared to XPE HEW white LEDs having oblique substrate walls and a conformal phosphor coating with phosphor particles having a d50 of about 15 μm (mean max dCCT of about 2000). (*Id.* at [0076].)

Moreover, in Figure 9, shown below,

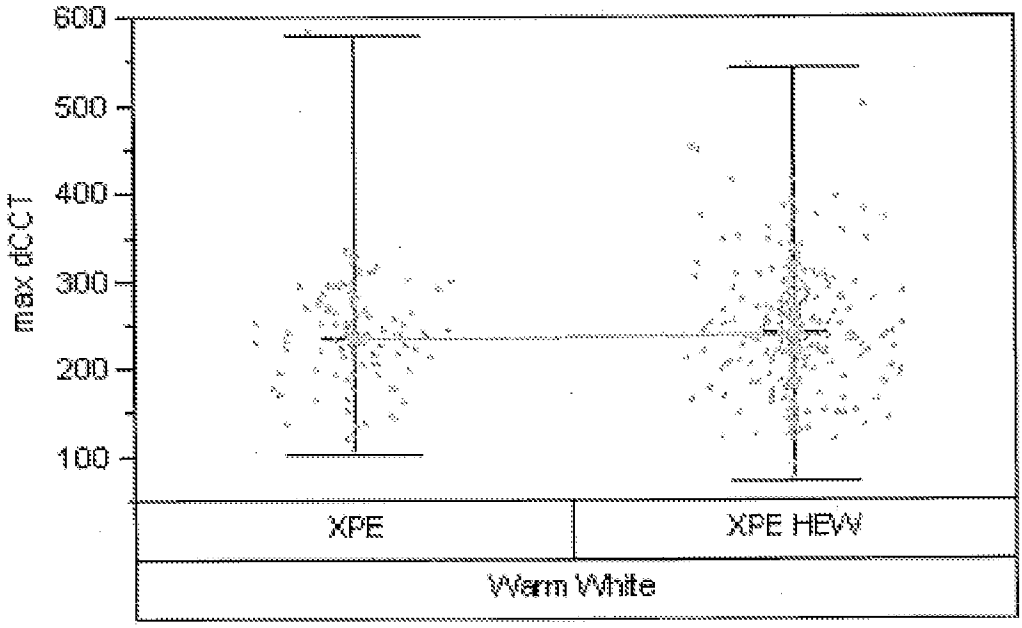

{Fig. 9 shows max dCCT for vertical walls (d50 = 5.5μm) is almost the same as max dCCT for oblique walls (d50 = 15 μm)}

the max dCCT of an XPE LED with vertical walls and d50 = 5.5 μm is shown to be nearly the same as the max dCCT of an XPE HEW LED with oblique walls and d50 = 15 μm, despite the factor of about three difference in average phosphor particle size. (*Id.* at [0078].)

The Examiner responds that paragraph [0071] of the Specification indicates that the d50 range of about 10 μm to 20 μm is not critical because it is "only one of a plurality of ranges that apply to various embodiments of applications." (Ans. 15, ll. 9–11.) This reasoning is not persuasive under the present circumstances because it does not address the central point that

the Examiner has not directed our attention to any prior art disclosure of record that would have led a person having ordinary skill in the art to predict the results shown in Figures 7 and 9. In any event, an applicant for patent need not claim every embodiment disclosed in the supporting specification.

Once a prima facie case of obviousness has been established—and we are persuaded that such is the case here—the evidence supporting unexpected results must be analyzed and weighed against the evidence supporting obviousness. When that evidence is directly contrary to expectations of record, and no satisfactory explanation is provided showing that the disclosure in the Specification, which in this case is supported by evidence, should be discounted for some reason, the conclusion that unexpected results rebut the prima facie case of obviousness is sound.

The Examiner makes no findings regarding the obviousness of the dependent claims that overcome the inadequacies of the rejection of the sole independent claim.

Accordingly, the rejection for obviousness of the appealed claims is reversed.

C. Order

It is ORDERED that the rejection of claims 1, 3–10, 16, 18–28, 62, and 64 is reversed.

REVERSED