UNITED STATES PATENT AND TRADEMARK OFFICE

UNITED STATES DEPARTMENT OF COMMERCE
United States Patent and Trademark Office
Address: COMMISSIONER FOR PATENTS
P.O. Box 1450
Alexandria, Virginia 22313-1450
www.uspto.gov

APPLICATION NO.	FILING DATE	FIRST NAMED INVENTOR	ATTORNEY DOCKET NO.	CONFIRMATION NO.
12/116,013	05/06/2008	Jimmy Jian-min Mao	VIOPP015	6214

51111 7590 11/15/2016
AKA CHAN LLP
Melvin Chan
900 LAFAYETTE STREET
SUITE 710
SANTA CLARA, CA 95050

EXAMINER
LIU, CHU CHUAN

ART UNIT	PAPER NUMBER
3777	

NOTIFICATION DATE	DELIVERY MODE
11/15/2016	ELECTRONIC

Please find below and/or attached an Office communication concerning this application or proceeding.

The time period for reply, if any, is set in the attached communication.

Notice of the Office communication was sent electronically on above-indicated "Notification Date" to the following e-mail address(es):

PTO-INBOX@AKACHANLAW.COM

UNITED STATES PATENT AND TRADEMARK OFFICE

BEFORE THE PATENT TRIAL AND APPEAL BOARD

Ex parte JIMMY JIAN-MIN MAO and ROBERT E. LASH

Appeal 2015-003054
Application 12/116,013
Technology Center 3700

Before DONALD E. ADAMS, JEFFREY N. FREDMAN, and TIMOTHY G. MAJORS, *Administrative Patent Judges*.

PER CURIAM

DECISION ON APPEAL

This is an appeal[1] under 35 U.S.C. § 134 involving claims to a method for measuring cerebral oxygen saturation. The Examiner rejected the claims as obvious.[2] We have jurisdiction under 35 U.S.C. § 6(b). We reverse.

---

[1] Appellants identify the Real Party in Interest as ViOptix, Inc. (*See* App. Br. 2.)

[2] The rejection of claim 52 as being indefinite (*see* Final Act. 2–3) has been withdrawn (*see* Ans. 15).

Statement of the Case

Background

Appellants' "invention relates to patient monitoring devices and methods" (Spec. ¶ 2). Appellants' invention uses "a device including a first source structure, a first near detector structure, a first far detector structure, and a light diffusing layer, where the first near detector structure receives a beam of light after the beam of light has been transmitted through a tissue and the light diffusing layer" (*id.* ¶ 9).

The Claims

Claims 16, 17, 19, 21–34, and 36–54 are on appeal. Independent claim 16 is representative and reads as follows (emphasis added):

> 16. A method comprising:
>
> positioning a sensor head of a tissue oximeter to face toward a tissue, wherein the tissue oximeter can measure oxygen saturation of the tissue without requiring a pulse, the sensor head comprises a first source structure, a second source structure, a far detector arrangement, a near detector arrangement, and a semitranslucent film covering the near detector arrangement;
>
> transmitting light through the first source structure and the second source structure into a tissue;
>
> *receiving a first light transmitted through the tissue and the semitranslucent film covering the near detector arrangement at the near detector arrangement*, the first received light at the near detector arrangement including attenuation characteristics due to the semitranslucent film;
>
> *receiving a second light transmitted through the tissue at the far detector arrangement, the second received light not passing through the semitranslucent film*, and the second received light at the far detector arrangement not including the attenuation characteristics; and
>
> processing the first and second received light using a system unit.

The Issues

A. The Examiner rejected claims 16, 17, 19, 36, 46, 50, 51, and 53 under 35 U.S.C. § 103(a) as obvious over Chen[3] and Cadell[4] (Ans. 2–7).

B. The Examiner rejected claims 21–30, 31–34, 37, 40, and 43–45 under 35 U.S.C. § 103(a) as obvious over Chen (Ans. 7–9).

C. The Examiner rejected claim 38 under 35 U.S.C. § 103(a) as obvious over Chen and O'Neil[5] (Ans. 10[6]).

D. The Examiner rejected claims 39, 41, and 42 under 35 U.S.C. § 103(a) as obvious over Chen and Delonzor[7] (Ans. 10–12).

E. The Examiner rejected claims 47–49 and 54 under 35 U.S.C. § 103(a) as obvious over Chen, Cadell, and Delonzor (Ans. 12–15).

A. and E. 35 U.S.C. § 103(a) over Chen and Cadell, and Chen, Cadell, and Delonzor

Because the same issue is dispositive for these two rejections, we will consider them together.

Appellants' independent claims 16 and 47 require "receiving a first light transmitted through the tissue and the semitranslucent film covering the near detector arrangement at the near detector arrangement" and "receiving a second light transmitted through the tissue at the far detector arrangement, the second received light not passing through the semitranslucent film."

---

[3] Chen et al., US 7,072,701 B2, issued July 4, 2006 ("Chen").
[4] Cadell et al., US 5,429,128, issued July 4, 1995 ("Cadell").
[5] O'Neil et al., US 6,748,254 B2, issued June 8, 2004 ("O'Neil").
[6] We note that the Examiner misidentified O'Neil as "O'Nell et al.," "USPN 6,784,254" (*see* Ans. 10).
[7] Delonzor et al., US 5,797,841, issued Aug. 25, 1998 ("Delonzor").

Independent claim 50 requires "receiving a first light transmitted through the tissue and the semitranslucent film covering the first plurality of detectors at the first plurality of detectors" and "receiving a second light transmitted through the tissue at the second plurality of detectors, the second received light not passing through the semitranslucent film."

The Examiner finds that

> Chen discloses a method comprising: positioning a sensor head of a tissue oximeter (abstract and Fig. 1) to face toward a tissue (Fig. 1), wherein the tissue oximeter can measure oxygen saturation of the tissue without requiring a pulse (NIRS, Col[.] 4 lines 28–52), the sensor head comprises a first source structure (one or more laser diodes in 18, Fig. 1 and Col 6[.] lines 27–53), a second source structure (one or more laser diodes in 18, Fig. 1 and Col[.] 6 lines 27–53), a far detector arrangement (element 20, Fig. 1) and a near detector arrangement (element 19, Fig. 1); transmitting light through the first source structure and the second source structure into a tissue (Fig. 1); receiving a first light transmitted through the tissue (element 19, Fig. 1; Fig. 4), the first received light at the near detector arrangement including attenuation characteristics (Fig. 4); receiving a second light transmitted through the tissue at the far detector arrangement (element 20, Fig. 1; Fig. 4); and processing the first and second received light using a system unit (elements 12 and 16, Fig. 2).

(Ans. 2–3; *see also id.* at 12.)

The Examiner acknowledges that "Chen does not specifically disclose a semitranslucent film covering the near detector arrangement and the second received light not passing through the semitranslucent film, and the second received light at the far detector arrangement not including the attenuation characteristics" (*id.* at 3; *see also id.* at 12).

The Examiner turns to Cadell and finds that it "teaches to prevent a photodetector from saturating (i.e.[,] over-saturating), a neutral density filter

can be utilized and an OD of the filter can be added to obtain the absorbance information (Col[.] 6 lines 40-59)" (*id.* at 3; *see also id.* at 12).

The Examiner asserts that because "[i]t is known that when oversaturation happens, details of the detected signals above the dynamic range of the detector may not reflect the true level correctly," it would have been obvious to "modify the method (Chen) to incorporate a proper neutral density filter (Cadell) to the near detector in order to obtain more accurate optical measurements" (*id.* at 3–4; *see also id.* at 12).

The issue with respect to these rejections is: Does the evidence of record support the Examiner's conclusion that Chen and Cadell render the claims obvious?

Findings of Fact

1. Chen teaches

> A method and apparatus for non-invasively determining the blood oxygen saturation level within a subject's tissue is provided that utilizes a near infrared spectrophotometric (NIRS) sensor capable of transmitting a light signal into the tissue of a subject and sensing the light signal once it has passed through the tissue via transmittance or reflectance. The method includes the steps of: (1) transmitting a light signal into the subject's tissue, wherein the transmitted light signal includes a first wavelength, a second wavelength, and a third wavelength; (2) sensing a first intensity and a second intensity of the light signal, along the first, second, and third wavelengths after the light signal travels through the subject at a first and second predetermined distance; (3) determining an attenuation of the light signal for each of the first, second, and third wavelengths using the sensed first intensity and sensed second intensity of the first, second, and third wavelengths; (4) determining a difference in attenuation of the light signal between the first wavelength and the second wavelength, and between the first wavelength and the third wavelength; and (5) determining the blood oxygen

> saturation level within the subject's tissue using the difference in attenuation between the first wavelength and the second wavelength, and the difference in attenuation between the first wavelength and the third wavelength.

(Chen Abstract; *see also* Ans. 2–3.)

2. Figure 1 of Cadell is reproduced below:

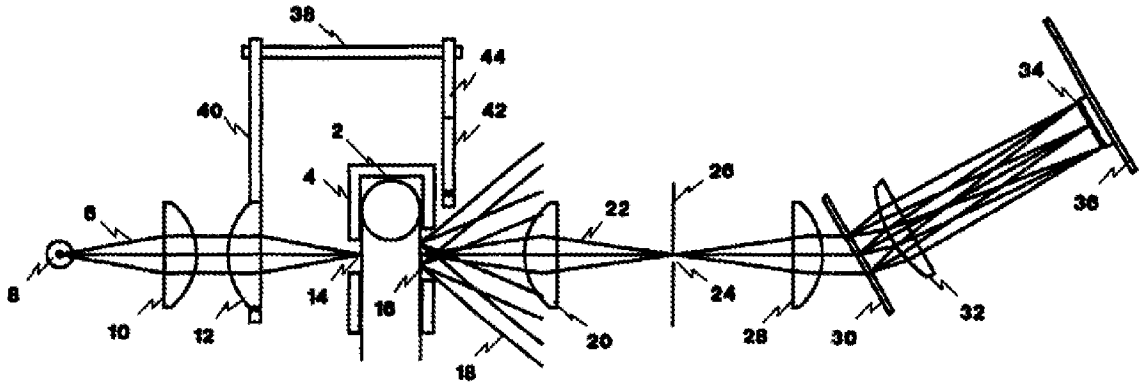

Figure 1

Figure 1 shows "a light source **8**," "a finger **2**," and "[a] neutral density filter **42** is mounted on a support **44**," in which "light **22** passes through a sensor focussing [sic] lens **32**, which focusses the light onto a linear photo diode array **34**," and "[t]he array **34** is connected to a printed circuit board **36** for processing of data obtained from the differences in light intensity as the light passes through the finger" (Cadell 2:1–21, 36–38; *see also* Ans. 3).

3. Cadell teaches that "[w]hen it is desired to take a reference measurement with the monitoring device, there is no finger in the receptor and the motor . . . rotates the shaft **38** to move the filter **42** so that it is in line with the exit **16** and to move the lens **12** away from the entrance **14**" (Cadell 2:39–43).

4. Cadell teaches

> Light entering the body is scattered and that light which emerges radiates in virtually every direction. This light scattering means that a limited proportion of the light can be captured by a lens system placed at the point where light exits from the body part. Further, the light that is captured for diffraction onto a diode array must be collimated and this further reduces the useful light available to the instrument. The result is that to measure the light falling onto a diode array it is necessary to integrate the light over a period of about 200 milliseconds. This period provides a useful amount of light for measuring the transmitted light. To prevent the array/detector from saturating during the reference scan it is necessary to place a neutral density filter in the path of the reference beam. Absorbance may be expressed in the usual manner, and by adding the constant OD of the neutral density filter at a given wavelength to the calculated absorbance it is possible to indicate the total effective optical density due to both absorbance and scattering.

(Cadell 6:40–59; *see also* Ans. 3.)

Principles of Law

A prima facie case of obviousness "requires a suggestion of all limitations in a claim," *CFMT, Inc. v. Yieldup Int'l Corp.*, 349 F.3d 1333, 1342 (Fed. Cir. 2003) and "a reason that would have prompted a person of ordinary skill in the relevant field to combine the elements in the way the claimed new invention does." *KSR Int'l Co. v. Teleflex Inc.*, 550 U.S. 398, 418 (2007).

"[R]ejections on obviousness grounds cannot be sustained by mere conclusory statements; instead, there must be some articulated reasoning with some rational underpinning to support the legal conclusion of obviousness." *In re Kahn*, 441 F.3d 977, 988 (Fed. Cir. 2006).

Analysis

Appellants contend that "Chen and Cadell's devices and operation techniques are very different" because "[t]he neutral density filter of the Cadell finger system is used for calibrating the finger sensor and is not used for taking measurements for analysis" (App. Br. 10).

The Examiner responds that

> the rejection was made by incorporating a neutral density filter taught by Cadell in the near detector taught by Chen in order to prevent the detector from potential over-saturating. Examiner indicated in the rejection . . . that the near detector of the sensor configuration taught by Chen would suffer over-saturating due to shorter optical length and therefore reduces the accuracy of optical measurements. The function of the neutral density filter is to prevent a photodetector from saturating (i.e.[,] over-saturating) (Col[.] 6 lines 40–59 of Cadell).

(Ans. 15–16.)

We find that Appellants have the better position. Cadell, at best, teaches "[t]o prevent the array/detector from saturating *during the reference scan* it is necessary to place a neutral density filter in the path of the reference beam" (FF 4 (emphasis added)). Cadell teaches that "[w]hen it is desired to take a *reference measurement* with the monitoring device, *there is no finger in the receptor* and the motor . . . rotates the shaft **38** to *move the filter **42** so that it is in line* with the exit **16** and to move the lens **12** away from the entrance **14**" (FF 3 (emphasis added); *see also* FF 2).

As Appellants explain,

> Chen never describes or suggests that either detector 19 or 20 of the Chen device receives such an amount of light that these detectors operate outside of their dynamic ranges. That is, there is no description, suggestion, or motivation to modify Chen to solve a problem with the Chen device <u>that does not exist in the</u>

> device. The examiner's rational for identifying a problem with the Chen device that does not exist in the Chen device is not a reasonable motivation for modifying the Chen device as asserted by the examiner.

(Reply Br. 5.) Appellants further point out that

> because Chen does not describe or suggest that the Chen detectors operate outside of their dynamic range, placing a neutral density filter over one of these detectors would render the Chen device entirely inoperable for its intended purpose because the detector covered by the neutral density filter would not be properly calibrated and would operate outside of its intended operating range. Therefore, the Chen device with a neutral density filter placed over the near detector when making a tissue measurement would render unreliable tissue measurements.

(*Id.* at 5–6.) If the proposed modification would render the prior art invention being modified unsatisfactory for its intended purpose, then there is no suggestion or motivation to make the proposed modification. *In re Fritch*, 972 F.2d 1260, 1265 n.12 (Fed. Cir. 1992), citing *In re Gordon*, 733 F.2d 900, 902 (Fed. Cir. 1984).

On this record, the Examiner failed to establish an evidentiary basis to support a conclusion that there was an advantage or reason to receive a first light transmitted through the tissue and the semitranslucent film covering the near detector arrangement or the first plurality of detectors, and to receive a second light transmitted through the tissue at the far detector arrangement or the second plurality of detectors, "the second received light not passing through the semitranslucent film" as required by claims 16, 47, and 50.

B–D. 35 U.S.C. § 103(a) over Chen, Chen and O'Neil, and Chen and Delonzor

Because the same issue is dispositive for these three rejections, we will consider them together.

The Examiner finds that

> Chen discloses a method comprising: placing a sensor head on a surface of a tissue to be measured (Fig. 1); transmitting light through a plurality of sources of the sensor head into the tissue (elements 18, Fig. 1 and associated descriptions); receiving light transmitted through the tissue at a first detector structure (element 19, Fig. 1) and at a third detector structure and a fourth detector structure of a second plurality of detectors (elements 20, Fig. 1; elements 20 comprises one or more photodiodes), wherein the first detector structure detects a first attenuated amount of light (second block of Fig. 4), and the third detector structure detects a second attenuated amount of light (second block Fig. 4); using the first attenuated amount, calculating a first attenuation coefficient (third block of Fig. 4) for a shallow tissue region having a depth of at most about X below the surface of the tissue (Fig. 1); and using the second attenuated amount and the first attenuation coefficient, calculating a second attenuation coefficient for a deep tissue region (fourth block, Fig. 4 and associated descriptions) having a depth of at least about Y below the surface of the tissue (Fig. 1).

(Ans. 7.)

The Examiner acknowledges that "Chen does not specifically disclose[] receiving light transmitted through the tissue at a first detector structure and a second detector structure of a first plurality of detectors" (*id.*).

The Examiner asserts that because "[i]t is known that wavelength-specific photodetectors can facilitate detecting a particular wavelength or wavelength band," it would have been obvious to "modify the sensor to

incorporate wavelength-specific photodetectors in both near and far detector structures in order to obtain more accurate optical measurements of the predetermined wavelengths" (*id.* at 7–8).

The issue with respect to these rejections is: Does the evidence of record support the Examiner's conclusion that Chen renders the claims obvious?

Findings of Fact

5. Figure 4 of Chen is reproduced below:

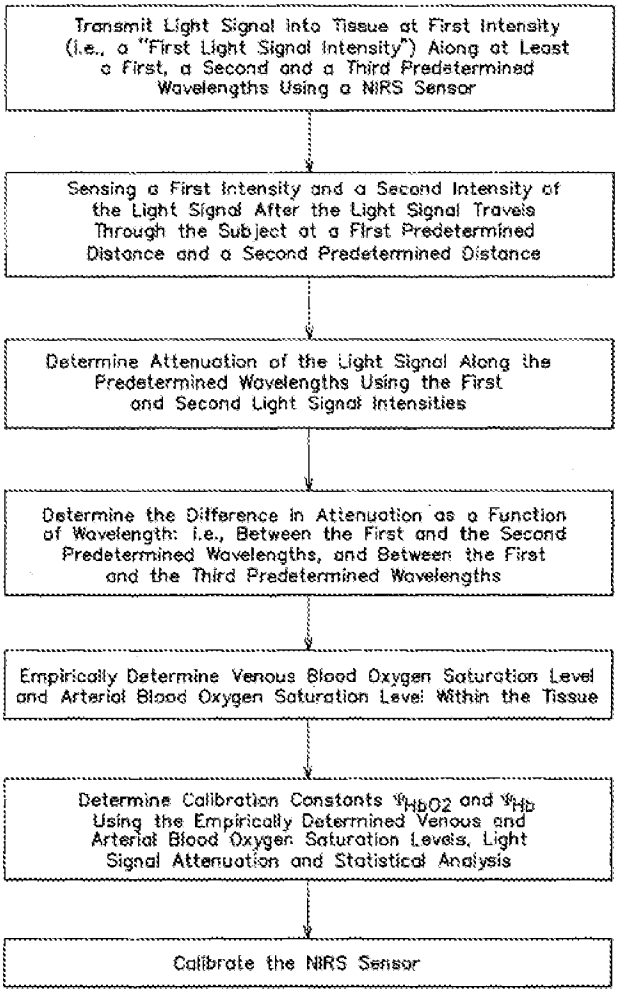

FIG. 4

Figure 4 shows "a block diagram of the present methodology for calibrating a NIRS sensor" (Chen 6:10–11; *see also* Ans. 7).

Analysis

Appellants contend that "the calculated attenuation of light is a property of the light itself, whereas an attenuation coefficient [is] a property of tissue being scanned," that "nowhere does Ch[e]n ever describe or suggest using a first calculated attenuation coefficient for a first tissue region for calculating a second attenuation coefficient for a second tissue region," and that "Chen uses an entirely different method for ultimately determining oxygen saturation based on the use of different wavelengths travelling th[rough] tissue as described at step four of figure 4" (App. Br. 19).

The Examiner responds that

> [a]ccording to Col[.] 6 line 63 – Col[.] 8 line 50, the attenuation parameter which comprises attenuation and energy loss in shallow tissue is denoted by Ax, the attenuation parameter which comprises attenuation and energy loss from both shallow and deep tissue is denoted by Ab, and the attenuation parameter of deep tissue only is denoted by A', wherein A = Ab-Ax and A' is utilized in the calculation of oxygen saturation in the deep tissue site (see equations 5–7 and 15–17 of Chen).

(Ans. 18; *see also id.* at 19.)

We find that Appellants have the better position. Chen, at best, teaches "Determine the Difference in Attenuation as a Function of Wavelength: i.e., Between the First and the Second Predetermined Wavelengths, and Between the First and the Third Predetermined Wavelengths" (FF 5).

As Appellants explain,

> <u>Equations 5, 6, and 7 of Chen describe the absorption of light, and do not describe the attenuation coefficient of tissue</u> . . . .

> Light absorption and the attenuation coefficient of tissue are entirely different physical properties as is well understood by those of skill in the art. Light absorption describes the loss of energy of light as the light propagates through a medium. The attenuation coefficients of tissue describe a physical characteristic of tissue that can attenuate light, i.e., cause the light to [lose] energy as the light passes through the tissue. Light (i.e., electromagnetic waves) and the loss of light by absorption or other attenuation are entirely different from tissue (i.e., a physical medium) and an attenuation coefficient that describes a physical characteristic of the tissue.

(Reply Br. 11.)

On this record, the Examiner failed to establish an evidentiary basis to support a finding that Chen teaches "using the first attenuated amount, calculating a first attenuation coefficient for a shallow tissue region having a depth of at most about X below the surface of the tissue" and "using the second attenuated amount and the first attenuation coefficient, calculating a second attenuation coefficient for a deep tissue region having a depth of at least about Y below the surface of the tissue" as required by claim 21.

SUMMARY

In summary, we reverse the rejection of claims 16, 17, 19, 36, 46, 50, 51, and 53 under 35 U.S.C. § 103(a) as obvious over Chen and Cadell.

We reverse the rejection of claims 21–30, 31–34, 37, 40, and 43–45 under 35 U.S.C. § 103(a) as obvious over Chen.

We reverse the rejection of claim 38 under 35 U.S.C. § 103(a) as obvious over Chen and O'Neil.

We reverse the rejection of claims 39, 41, and 42 under 35 U.S.C. § 103(a) as obvious over Chen and Delonzor.

We reverse the rejection of claims 47–49 and 54 under 35 U.S.C. § 103(a) as obvious over Chen, Cadell, and Delonzor.

REVERSED