UNITED STATES PATENT AND TRADEMARK OFFICE

UNITED STATES DEPARTMENT OF COMMERCE
United States Patent and Trademark Office
Address: COMMISSIONER FOR PATENTS
P.O. Box 1450
Alexandria, Virginia 22313-1450
www.uspto.gov

APPLICATION NO.	FILING DATE	FIRST NAMED INVENTOR	ATTORNEY DOCKET NO.	CONFIRMATION NO.
13/660,626	10/25/2012	Sergey S. Grigoryants	10121/12907 (03-058US4)	6865

104919 7590 11/02/2016
Fay Kaplun & Marcin, LLP -- BSC
150 Broadway, suite 702
New York, NY 10038

EXAMINER
STOUT, MICHAEL C

ART UNIT	PAPER NUMBER
3736	

NOTIFICATION DATE	DELIVERY MODE
11/02/2016	ELECTRONIC

Please find below and/or attached an Office communication concerning this application or proceeding.

The time period for reply, if any, is set in the attached communication.

Notice of the Office communication was sent electronically on above-indicated "Notification Date" to the following e-mail address(es):

okaplun@fkmiplaw.com
fkmiplaw@yahoo.com

UNITED STATES PATENT AND TRADEMARK OFFICE

BEFORE THE PATENT TRIAL AND APPEAL BOARD

Ex parte SERGEY S. GRIGORYANTS and LUIS J. MASEDA[1]

Appeal 2014-008715
Application 13/660,626
Technology Center 3700

Before DONALD E. ADAMS, JEFFREY N. FREDMAN,
and TIMOTHY G. MAJORS, *Administrative Patent Judges*.

PER CURIAM

DECISION ON APPEAL

This is an appeal under 35 U.S.C. § 134 involving claims to a tissue sampling device which have been rejected as obvious. We have jurisdiction under 35 U.S.C. § 6(b).

We affirm.

---

[1] Appellants identify the Real Party in Interest as Boston Scientific Scimed, Inc. (App. Br. 2.)

STATEMENT OF THE CASE

Appellants' "invention relates generally to tissue sampling devices and relates more particularly to transbronchial needle aspiration devices." (Spec. 1:7–8.)

Claims 10, 12–21, and 23–29 are on appeal. Claim 10 is illustrative:

> 10. A tissue sampling device, comprising:
>
> a flexible catheter extending longitudinally from a proximal end to a distal end and including a channel extending therethrough;
>
> a sampling needle slidably received within the channel of the catheter and including a distal tip;
>
> a wire extending through the channel and including a distal end connected to the proximal end of the sampling needle to move the sampling needle between a retracted position in which the distal end thereof is disposed within the channel of the catheter to an extended position in which the distal end thereof extends distally beyond the distal end of the catheter;
>
> a handle coupled to the proximal end of the catheter; and
>
> a sliding lock coupled to a proximal end of the wire mounted within the handle to move the sampling needle between the retracted and extended position, the sliding lock including a releasable locking mechanism to lock the sampling needle in the retracted position, wherein the locking mechanism includes a proximal notch extending through a proximal portion of the handle and a pawl extending laterally from the sliding lock, the pawl being biased radially outward to engage the proximal notch in the retracted position and movable radially inward to disengage the proximal notch.

(App. Br. 13 (Claims App'x).)

The claims stand rejected as follows:

I. Claims 10, 12–17, 19, 21, 23–27, and 29 are rejected under 35 U.S.C. § 103(a) over Wang[2] and Haber.[3]

II. Claims 18 and 28 are rejected under 35 U.S.C. § 103(a) over Wang, Haber, and Smith.[4]

III. Claim 20 is rejected under 35 U.S.C. § 103(a) over Wang, Haber, and Savage.[5]

REJECTION I

Appellants argue the patentability of the claims together. We select claim 10 as representative. Claim 10 requires, among other things,

> a sliding lock coupled to a proximal end of the wire mounted within the handle to move the sampling needle between the retracted and extended position, the sliding lock including a releasable locking mechanism to lock the sampling needle in the retracted position, wherein the locking mechanism includes a proximal notch extending through a proximal portion of the handle and a pawl extending laterally from the sliding lock, the pawl being biased radially outward to engage the proximal notch in the retracted position and movable radially inward to disengage the proximal notch.

(App. Br. 13 (Claims App'x).)

The Examiner finds that "Wang teaches a sampling device for collecting tissue wherein a needle is reciprocated [from] a retracted

---

[2] Wang, US 4,791,937, issued Dec. 20, 1988.
[3] Haber et al., US 4,813,426, issued Mar. 21, 1989.
[4] Smith et al., US 6,743,206 B1, issued June 1, 2004.
[5] Savage et al., US 5,830,209, issued Nov. 3, 1998.

position[], the needle being attached to the distal end of a wire 22, to an extended position to sample tissue." (Ans. 3.) The Examiner finds that

> Wang is silent regarding the mechanism to extend and retract the needle member, specifically a mechanism including a sliding lock coupled to a proximal end of the wire mounted within the handle to move the sampling needle between the retracted and extended position, the sliding lock including a releasable locking mechanism to lock the sampling needle in the retracted position.

(*Id.* at 4.)

The Examiner, however, turns to Haber and finds it teaches

> a device for collecting a tissue sample comprising a needle . . ., wherein the needle is moved in a reciprocal manner wherein the hub assembly is fit[ted] within a housing, best shown in Figures 3 and 5, the device comprising a sliding lock coupled to a proximal end of the shaft (a button 20 attached to the carrier 14, see Figure 1) mounted within the handle to move the sampling needle between the retracted and extended position (retracted position be[st] shown in Figure 5, extended position shown in Figure 3), the sliding lock including a releasable locking mechanism to lock the sampling needle in the retracted position . . ., wherein the locking mechanism includes a proximal notch extending through a proximal portion of the handle and a pawl extending laterally from the sliding lock . . . .

(*Id.* at 4–5.) The Examiner concludes that it would have been obvious to "modify the device taught by Wang to include a slide locking mechanism in a reciprocating actuator as taught by Haber in order to secure the needle in a retracted position to prevent accidental contact with a potentially contaminated needle." (*Id.* at 5.)

The issue with respect to this rejection is: Does the evidence of record support the Examiner's conclusion that Wang and Haber would have rendered claim 10 obvious?

Findings of Fact (FF)

1. Wang teaches

> A biopsy needle assembly comprised of an outer flexible catheter and a reciprocating interior structure on which the needle is mounted. In one embodiment, the needle is directly connected to an internal guide wire. In another, the needle is directly connected to an inner flexible catheter and the guide wire can either extend through the needle or be stopped within the needle.

(Wang Abstract; *see also* Ans. 2–3.)

2. Wang teaches that "[i]n obtaining the tissue sample within the needle it is necessary to apply some negative pressure or suction to the needle once the needle is inserted into the tissue to help assure tissue collection." (Wang 1:56–59; *see also* Reply Br. 6.)

3. Wang teaches that

> suction will be applied to the cavity defined between the interior of the outer catheter and the exterior of the inner catheter which will lead directly to the tip of the hollow needle through the lateral opening in the needle and allow negative pressure to be applied directly to the tissue being sampled. Because the guide wire is designed to fit tightly within the inner catheter the guide wire will provide a seal therein so that negative pressure or suction will only be applied via the chamber between the two catheters and through the hollow needle. Sufficient diagnostic tissue or material can be obtained and it will be easier to interpret the results from the tissue being sampled because there will be a lack of contamination by otherwise unwanted tissue or cells and it will be possible as well to obtain a relatively large quantity of the diagnostic material or tissue since the continued presence of the guide wire continues to provide rigidity to the catheter assembly.

(Wang 4:18–37; *see also* Ans. 15.)

4. Wang's Figure 1b is reproduced below:

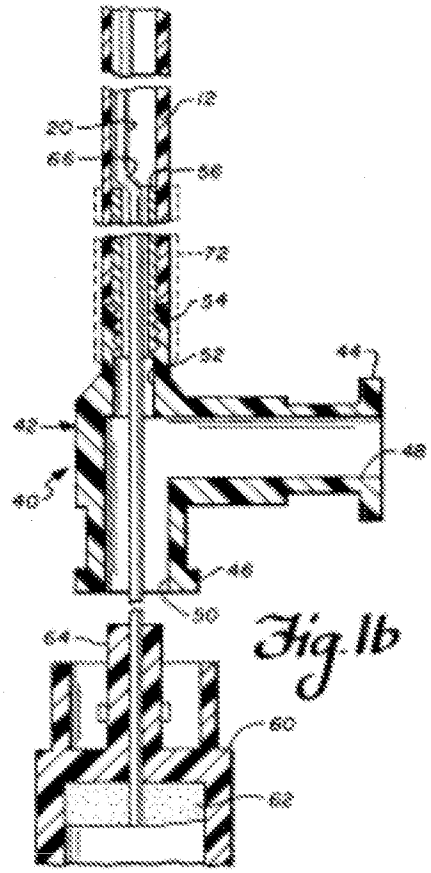

Figure 1b shows that

> guide wire **20** is bent or kinked, as indicated at **66**, so that the distal e[n]d of the hollow tubular member **56** will act as a stop member and prevent further retraction of guide wire **20**. . . . It is preferred to limit travel of needle **22** so that the tip will not be retracted beyond the interior of tip **14** whereby the distal tip of needle **22** will not be retracted to a position beyond sealing means **30** as to do so would destroy that seal.

(Wang Fig. 1b, 7:46–57; *see also* Fig. 1a, Ans. 2–3.)

5. Wang teaches that "[t]urning now to the next embodiment, as shown in FIGS. **3*a*–5*b***, the outer hollow catheter and its distal and proximal ends are formed as described above with respect to the first embodiment." (Wang Fig., 8:13–16; *see also* Ans. 2–3, 10.)

6. Wang's Figure 3b is reproduced below:

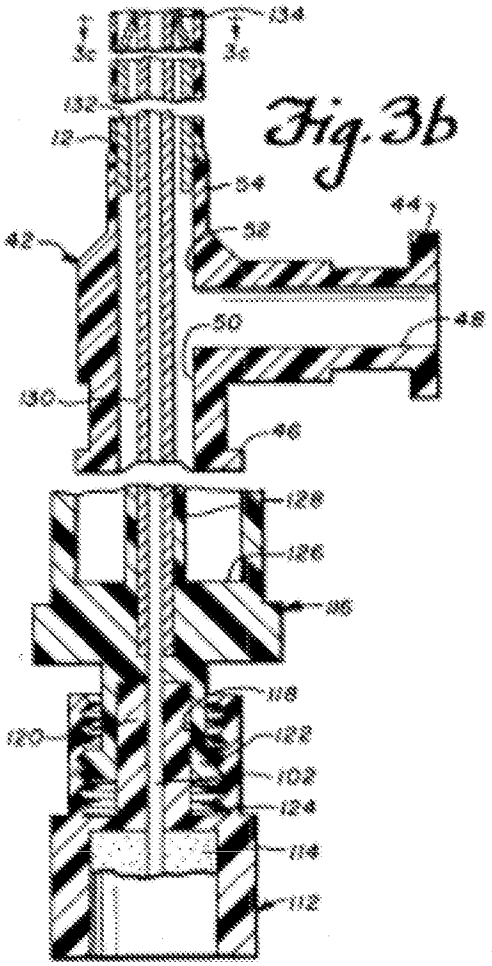

Figure 3b shows "three portions[:] housing **42**, end cap **112** and an intermediate member **116**," in which "intermediate member **116** includes a central tubular hub portion **128** in which the proximal end of a tubular mounting sleeve **130** is secured, as for example by use of an adhesive or friction fit." (Wang Fig. 3b, 8:42–44, 53–59; *see also* Fig. 3a, Ans. 2–3, 11.)

7. Haber's Figure 3 is reproduced below:

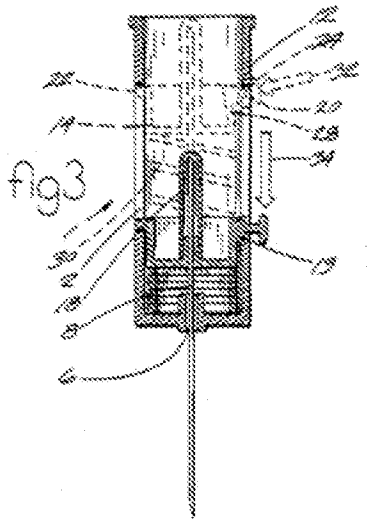

Figure 3 shows

> A shielded safety syringe comprising a cylindrical, outer protective sleeve, an inner needle carrier movable axially through the sleeve, and a double-ended hypodermic needle supported by the needle carrier and aligned coaxially with respect to the outer sleeve and needle carrier. . . . A position control button is connected to the needle carrier and slidable through an axial guide channel formed in the outer sleeve for moving the needle carrier between proximal and distal positions within the sleeve. . . . Locking detents are formed at opposite ends of the guide channel to receive the position control button, so that the needle maybe reliably retained in either the axially extended or retracted position.

(Haber Fig. 3, Abstract; *see also* Ans. 4–5, 13–14.)

DISCUSSION

We adopt the Examiner's findings of fact and reasoning regarding the scope and content of the prior art (Ans. 2–16; FF 1–7) and agree that claim

10 would have been obvious over Wang and Haber. We address below Appellants' arguments.

Appellants contend that "it would not have been obvious to one of ordinary skill in the art have modified the device of Wang to include a sliding lock mechanism." (App. Br. 6.) More particularly, Appellants argue that, in regard to Wang,

> a cap 60 coupled to a proximal end of a guide wire is an essential feature of the assembly 10 as it includes a plug member for sealing a first passage of the housing so that, when the cap is coupled to the housing, a needle is both locked in an extended configuration and so that it is sealed to permit a vacuum force to be applied through the needle via a second passage. Thus, modifying the assembly 10 of Wang to include a sliding lock mechanism in the housing would prevent the assembly 10 of Wang from functioning as intended.

(App. Br. 7; *see also* Reply Br. 4.)

Appellants further argue that

> The needle carrier 14 [of Haber] is configured to be longitudinally slidable within an outer sleeve 2 such that a seal cannot be established therebetween. Haber does not teach, show or suggest that the needle carrier 14 is in any way capable of establishing a seal with the outer sleeve 2.

(Reply Br. 6.)

These arguments are unpersuasive.

Wang teaches that "[i]n obtaining the tissue sample within the needle it is necessary to apply *some* negative pressure or suction to the needle once the needle is inserted into the tissue to help assure tissue collection." (FF 2 (emphasis added); *see also* Reply Br. 6.) Wang further teaches that "[b]ecause the guide wire is designed to fit tightly within the inner catheter the guide wire will provide a seal therein so that negative pressure or suction

will only be applied via the chamber between the two catheters and through the hollow needle. Sufficient diagnostic tissue or material can be obtained." (FF 3; *see also* Ans. 15.) Wang also teaches that

> guide wire **20** is bent or kinked, as indicated at **66**, so that the distal e[n]d of the hollow tubular member **56** will act as a stop member and prevent further retraction of guide wire **20**. . . . It is preferred to limit travel of needle **22** so that the tip will not be retracted beyond the interior of tip **14** whereby the distal tip of needle **22** will not be retracted to a position beyond sealing means **30** as to do so would destroy that seal.

(FF 4.) Wang further teaches that "intermediate member **116** includes a central tubular hub portion **128** in which the proximal end of a tubular mounting sleeve **130** is secured, as for example by use of an adhesive or friction fit." (FF 6.)

We are not persuaded by Appellants' contention that modifying Wang's device in the manner suggested by the Examiner would have prevented Wang's device from functioning as intended, including preventing *any* seal or vacuum (*see also* Ans. 9 ("A modified [] cap is still capable of providing a seal")). Even if suction was reduced somewhat to gain the benefit of a sliding lock as in Haber, that would not mean claim 10 is nonobvious. *See In re Urbanski,* 809 F.3d 1237, 1243 (Fed. Cir. 2016) (holding that a combination of references may be obvious even if the combination is at the expense of a benefit of one of the references). Appellants provide no persuasive factual evidence to show that Wang's device, as modified by the Examiner, would be inoperable. *See In re Geisler,* 116 F.3d 1465, 1470 (Fed. Cir. 1997) ("[A]ttorney argument [is] not the kind of factual evidence that is required to rebut a prima facie case of obviousness").

We are also not persuaded the skilled artisan, desiring the benefit of Haber's slidable/lockable control button (i.e., to keep a needle in an extended or retracted position) in a known transbronchial needle aspiration device, such as Wang, would have been unable to design a modified device that maintained a sufficient seal and level of suction. As the Supreme Court has emphasized, "[a] person of ordinary skill is also a person of ordinary creativity, not an automaton." *KSR Int'l v. Teleflex Inc.,* 550 U.S. 398, 421 (2007). The obviousness analysis thus can and should "take account of the inferences and creative steps that a person of ordinary skill in the art would employ." *Id.* at 418. "[I]f a technique has been used to improve one device, and a person of ordinary skill in the art would recognize that it would improve similar devices in the same way, using the technique is obvious unless its actual application is beyond his or her skill." *Id.* at 417. Nothing in the record here suggests the Examiner's proposed combination of known prior art elements according to their known functions would involve more than routine engineering efforts. Accordingly, the preponderance of the evidence supports the Examiner's conclusion that claim 10 would have been obvious.

Appellants also contend that "[t]he embodiment of Figs. 3a–5b [of Wang], does not show a sampling needle movable between a retracted and extended position via a guide wire coupled to a proximal end thereof, as required by the recited claim." (App. Br. 8; *see also* Reply Br. 5–6.)

This argument is unpersuasive.

Wang teaches that "[t]urning now to the next embodiment, as shown in FIGS. ***3a–5b***, the outer hollow catheter and its distal and proximal ends

are formed as described above with respect to the first embodiment." (FF 5; *see also* Ans. 10.)

We recognize, but are not persuaded by Appellants' contention that

> Although column 8 does include description for the embodiment of Figs. 3a–5b, it is respectfully noted that all of the references to column 8 the Examiner refers to have been with respect to columns 6–8 and Figs. 1 a–2b. *See 8/27/13 Office Action*, pp. 3–4 and 7. In the Final Office Action, the Examiner never references any portions of the needle assembly of Figs. 3a–5b or any of the corresponding description in columns 8–10.

(Reply Br. 5.)

This argument is unpersuasive as well. As Appellants point out, the Examiner did refer to column 8 of Wang (*see also* Ans. 10). Moreover, *see Merck & Co. Inc. v. Biocraft Labs. Inc.,* 874 F.2d 804, 807 (Fed. Cir. 1989) ("'the fact that a specific [embodiment] is taught to be preferred is not controlling, since all disclosures of the prior art, including unpreferred embodiments, must be considered.'") (quoting *In re Lamberti,* 545 F.2d 747, 750 (CCPA 1976)).

REJECTION II

Appellants contend that "Smith does not cure the deficiency of Wang in view of Haber." (App. Br. 11.) Having affirmed the rejection of the parent claim for the reasons given above, we thus affirm the rejection of claims 18 and 28.

REJECTION III

Appellants contend that "Savage does not cure the deficiency of Wang in view of Haber." (*Id.*) Having affirmed the rejection of the parent claim for the reasons given above, we thus affirm the rejection of claim 20.

CONCLUSION OF LAW

We affirm the rejection of claims 10, 12–17, 19, 21, 23–27, and 29 under 35 U.S.C. § 103(a) over Wang and Haber.

We affirm the rejection of claims 18 and 28 under 35 U.S.C. § 103(a) over Wang, Haber, and Smith.

We affirm the rejection of claim 20 under 35 U.S.C. § 103(a) over Wang, Haber, and Savage.

TIME PERIOD FOR RESPONSE

No time period for taking any subsequent action in connection with this appeal may be extended under 37 C.F.R. § 1.136(a).

AFFIRMED