# UNITED STATES PATENT AND TRADEMARK OFFICE

**UNITED STATES DEPARTMENT OF COMMERCE**
**United States Patent and Trademark Office**
Address: COMMISSIONER FOR PATENTS
P.O. Box 1450
Alexandria, Virginia 22313-1450
www.uspto.gov

| APPLICATION NO. | FILING DATE | FIRST NAMED INVENTOR | ATTORNEY DOCKET NO. | CONFIRMATION NO. |
|---|---|---|---|---|
| 12/594,906 | 10/06/2009 | Patrick G. Rafter | 2007P00982WOUS | 7907 |

24737 7590 10/28/2016
PHILIPS INTELLECTUAL PROPERTY & STANDARDS
465 Columbus Avenue
Suite 340
Valhalla, NY 10595

| EXAMINER |
|---|
| AKAR, SERKAN |

| ART UNIT | PAPER NUMBER |
|---|---|
| 3737 | |

| NOTIFICATION DATE | DELIVERY MODE |
|---|---|
| 10/28/2016 | ELECTRONIC |

**Please find below and/or attached an Office communication concerning this application or proceeding.**

The time period for reply, if any, is set in the attached communication.

Notice of the Office communication was sent electronically on above-indicated "Notification Date" to the following e-mail address(es):

marianne.fox@philips.com
debbie.henn@philips.com
patti.demichele@Philips.com

UNITED STATES PATENT AND TRADEMARK OFFICE

---

BEFORE THE PATENT TRIAL AND APPEAL BOARD

---

*Ex parte* PATRICK G. RAFTER, KARL THIELE, and ROBERT L. BURNHAM[1]

---

Appeal 2014-005017
Application 12/594,906
Technology Center 3700

---

Before DONALD E. ADAMS, JEFFREY N. FREDMAN, and JACQUELINE T. HARLOW, *Administrative Patent Judges*.

*PER CURIAM*

DECISION ON APPEAL

This is an appeal under 35 U.S.C. § 134(a) involving claims to an ultrasonic diagnostic imaging system. The claims are rejected as failing to comply with the written description requirement, indefinite, and obvious. We have jurisdiction under 35 U.S.C. § 6(b).

We AFFIRM.

---

[1] According to Appellants, the Real Party in Interest is Koninklijke Philips Electronics N.V. (App. Br. 3).

STATEMENT OF THE CASE

The Specification describes medical diagnostic ultrasound systems that "enable the performance of perfusion display and quantification with ultrasonic thick slice images" (Spec. 1:4–8). Claims 1–18 are on appeal. Claim 1 is illustrative and reads as follows (emphasis added):

> 1. An ultrasonic diagnostic imaging system for the qualitative or quantitative analysis of tissue perfusion comprising:
>
> an array transducer configured to transmit and receive scanlines over a volumetric region containing tissue which may have a perfusion defect;
>
> a beamformer, coupled to the array transducer, which acts to produce image data of a plurality of elevationally distinct, parallel slices of the volumetric region;
>
> a slice memory, coupled to the beamformer, which stores slice image data;
>
> *a combiner, coupled to the slice memory, which combines slice image data in the elevation direction*;
>
> a perfusion detector which operates on the combined slice image data to qualitatively depict perfusion by the concentration of micro bubbles in tissue or to produce a quantified perfusion parameter for a region of tissue; and
>
> a display responsive to the perfusion detector for displaying at least one of a tissue image with perfusion depicted by color or brightness, or a quantified perfusion parameter for a region of tissue.

The claims stand rejected as follows:

I. Claims 1–18 stand rejected under 35 U.S.C. § 112(a) as failing to comply with the written description requirement.

II. Claims 1–18 stand rejected under 35 U.S.C. § 112(b) as being indefinite.

III. Claims 1–10 stand rejected under 35 U.S.C. § 103(a) as being obvious over Ramamurthy,[2] Entrekin,[3] and Brandl.[4]

IV. Claims 11–18 stand rejected under 35 U.S.C. § 103(a) as being obvious over Ramamurthy, Entrekin, Brandl, and Powers.[5]

I.

The Examiner has rejected claims 1–18 under 35 U.S.C. § 112(a) as failing to comply with the written description requirement.

We agree with Appellants that the Examiner erred in interpreting the claim terms "beamformer" and "combiner" as means-plus-function limitations.

The Examiner asserts that these claim terms are interpreted as means-plus-function limitations because the terms are coupled with functional language without reciting sufficient structure to achieve the function (Final Act. 4). The Examiner asserts that while the claims recite means-plus-function limitations, the written description fails to disclose corresponding structures for the functions (*id.* at 6).

[2] Ramamurthy et al., US 6,015,384, issued Jan. 18, 2000.
[3] Entrekin et al., US 6,530,885 B1, issued Mar. 11, 2003.
[4] Brandl et al., US 2005/0049479 A1, published Mar. 3, 2005.
[5] Powers et al., US 2002/0045827 A1, published Apr. 18, 2002.

We are not persuaded. The absence of the words "means" or "step for" from the disputed claim elements creates a rebuttable presumption that § 112, paragraph 6, does not apply. *Williamson v. Citrix Online, LLC*, 792 F.3d 1339, 1348 (Fed. Cir. 2015). To overcome this presumption, the Examiner must demonstrate that the disputed claim terms either fail to "recite sufficiently definite structure," or else recite "function without reciting sufficient structure for performing that function." *Id.* (quoting *Watts v. XL Sys., Inc.*, 232 F.3d 877, 880 (Fed.Cir.2000)).

As Appellants point out, and the Examiner acknowledges, beamformers and combiners are well-known in the ultrasound art (App. Br. 9–10; Ans. 3–5). Moreover, the Specification characterizes the recited "beamformer" and "combiner" at length, and in a manner consistent with how those terms would be understood by an artisan of ordinary skill (Spec. 7:33–8:20, 9:13–10:7, Fig. 5). Accordingly, because we agree with Appellants that the claim terms "beamformer" and "combiner" would be understood by ordinarily skilled artisans to have a sufficiently definite meaning as the name for structure, we reverse this rejection.

II.

The Examiner has rejected claims 1–18 under 35 U.S.C. § 112(b) as being indefinite. The Examiner states that it is unclear "what range of thickness is encompassed by the relative term 'thick' as recited in the claims[,] and the metes and bounds of the slice thickness as recited in the claims is rendered indefinite by the use of the relative term 'thick'" (Ans. 7).

We observe, however, that although the Specification discusses the term "thick slice," the claims themselves include neither the term "thick," "thick slice," nor any variation of thereof (*see* Appellants' Claims

Appendix). Rather, the claims recite "slices," "slice image data," and "a combiner, . . . which combines slice image data in the elevation direction." The Examiner does not reject these, or any other recited claim elements, as indefinite. Accordingly, because this indefiniteness rejection is directed to terms not appearing in the claims, we must reverse it.

III.

We have considered Appellants' arguments, but are not persuaded that the Examiner erred in rejecting claims 1–10 under 35 U.S.C. § 103(a) as being unpatentable over Ramamurthy, Entrekin, and Brandl. Because the claims are not separately argued, we focus our discussion on independent claim 1, which is representative.

We adopt the Examiner's findings of fact and reasoning regarding the scope and content of the prior art (Final Rej. 8–16, 19–20; Ans. 7–10), and agree that claim 1 is rendered obvious by Ramamurthy, Entrekin, and Brandl. We address Appellants' arguments below.

*Findings of Fact*

FF 1. Ramamurthy discloses that

> A method of imaging to aid tissue viability determinations is provided. Tissue motion is detected for at least [a] region of tissue. Perfusion is estimated as a function of intensity data and time for the region of tissue. An image responsive to the detected tissue motion and the estimated perfusion is displayed. A combination of tissue motion imaging and perfusion estimation provides an assessment of tissue viability.

(Ramamurthy Abstract; *see also* Final Act. 9, 13–15.)

FF 2. Ramamurthy discloses a "system **10** [that] includes a transmit beamformer **12**, a transducer **14**, a receive beamformer **16**" and a "display

**36** [that] connects to the scan converter" (Ramamurthy 2:33–47; *see also* Final Act. 9, 13–15).

FF 3. Ramamurthy discloses that

> Intensities or perfusion estimate information is encoded along the x-axis, either by a separate color or a brightness of the colors associated with velocity. Other encoding techniques may be used. Preferably, the brightness of the color increases along the x-axis. In a preferred embodiment, strong signals from the contrast agent or high perfusion estimates are encoded by colors to the right of a primary memory map, such as represented by map **52** and weak signals or estimates are encoded by colors to the left of the map **52**.

(Ramamurthy 7:9–18; *see also* Final Act. 9, 13–15.)

FF 4. Ramamurthy discloses that "log compressed or scan converted data is input to the computer and memory **66**" (Ramamurthy 7:48–49; *see also* Final Act. 9, 13–15).

FF 5. Entrekin discloses

> An ultrasonic probe [that] is moved to scan a volumetric region of the body. As it is moved, targets within the region are interrogated from multiple look directions. The echo data from the multiple look directions are compounded to form spatially compounded image data, which is processed for display in a three dimensional display format.

(Entrekin Abstract; *see also* Final Act. 10, 13, 15.)

FF 6. Entrekin discloses that "[m]ultiple scans can be performed and compounded, which increase the speckle reduction as a function of the product of the number of scans and look directions" (Entrekin 2:10–13; *see also* Final Act. 10, 13, 15).

FF 7. Entrekin discloses that

> The transmitter **14** and beamformer **16** are operated under control of a system controller **18**, which in turn is responsive to the

> settings of controls of a user interface . . . When imaging harmonic contrast agents or performing tissue harmonic imaging the passband of the filter **22** is set to pass harmonics of the transmit band. . . . The filtered signals are detected by a detector **24** for B mode imaging . . .

(Entrekin 3:1–22; *see also* Final Act. 10, 13, 15.)

FF 8. Entrekin discloses that "[a]fter resampling the image frames are compounded by a combiner **36**," and "[t]he compound images may be stored in a Cineloop® memory **42** in either estimate or display pixel form" (Entrekin 4:5–6, 24–26; *see also* Final Act. 10, 13, 15).

FF 9. Entrekin discloses that

> The digital signal processors **60** can [weigh] the received image data and can resample the image data to spatially align pixels from look direction to look direction or frame to frame, for instance. The digital signal processors **60** direct the processed image frames to a plurality of frame memories **62** which buffer the individual image frames. The number of image frames capable of being stored by the frame memories **62** . . . The fully processed compounded image is then transmitted to the volume image rendering processor for rendering in a three dimensional display format.

(Entrekin 5:14–37; *see also* Final Act. 10, 13, 15.)

FF 10. Entrekin depicts in Figure 6 "a series of image slices $\mathbf{120}_{\boldsymbol{1}}$–$\mathbf{120}_{\boldsymbol{n}}$, which have been acquired from a volumetric region of the body" (Entrekin 7:55–57). Figure 6 is reproduced below.

FIG. 6

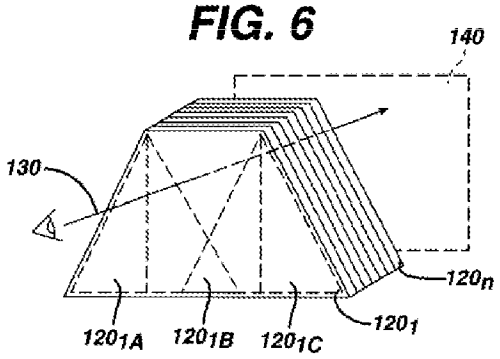


(*Id.* at Fig. 6.) Figure 6 shows that

> The volume image rendering processor **40** can operate to develop a 3D presentation of the spatially compounded volumetric image data in a variety of ways. . . . The volume of data can be presented as a series of slices or a volumetric block of image data. Images can be formed of arbitrary planes passing through the volumetric image data to produce synthesized slice images, a three dimensional technique known as multi-planar reformatting. One preferred way to present the volumetric data is in a rendered form known as kinetic parallax.

(*Id.* at 7:44–55; *see also* Final Act. 10, 13, 15.)

FF 11. Entrekin depicts in Figure 7 "one technique for acquiring spatially compounded volumetric image data" (Entrekin 8:18–20). Figure 7 is reproduced below.

FIG. 7

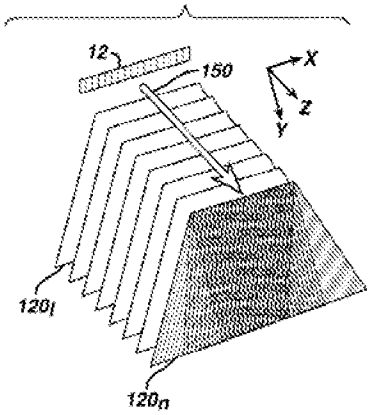


(*Id.* at Fig. 7.) Figure 7 shows that "[a] probe including an array transducer **12** is moved above the volumetric region in the z direction as indicated by

the arrow **150**" and "the use of steered linear component frames in which the scanlines in each component frame are parallel and at differing angles from frame to frame" (*Id.* at 8:20–22, 32–35; *see also* Final Act. 10, 13, 15).

FF 12. Entrekin discloses that

> spatial compounding is performed in two dimensions as the probe is swept over the volumetric region. This technique uses a two dimensional array transducer **212** which is capable of electronically steering beams in both the azimuth (AZ) direction and the elevation (EL) direction. As the probe containing transducer **212** is moved in the z direction as indicated by arrow **250**, component frames are acquired for spatial compounding in two or more planar orientations. In the illustrated example, a series of compound images are produced in parallel x-y planes and in planar orientations inclined with respect to the x-y orientation. . . . The beams are then elevationally steered to the $+\Theta_1$ orientation to acquire a third set of component frames for production of a spatially compounded image in the $+\Theta$ orientation.

(Entrekin 9:10–32; *see also* Final Act. 10, 13, 15.)

FF 13. Brandl discloses a

> Method and apparatus for displaying an enhanced image based on an image plane of data. A volume data set is acquired, and a plane is defined on an image based on the volume data set. The plane may be a C-plane. Data within the volume data set which is defined by the plane is processed with an image enhancing technique and the resultant enhanced image is displayed.

(Brandl Abstract; *see also* Final Act. 11–13, 15.)

FF 14. Brandl discloses that "[t]he ultrasound system **100** also includes a signal processor **116** to process the acquired ultrasound information (i.e., RF signal data or IQ data pairs) and prepare frames of ultrasound information for display on display system **118**" (Brandl ¶ 17; *see also* Final Act. 11–13, 15).

FF 15. Brandl discloses that

> The transducer **10** is moved, such as along a linear or arcuate path, while scanning a region of interest (ROI). At each linear or arcuate position, the transducer **10** obtains scan planes **18**. The scan planes **18** are collected for a thickness, such as from a group or set of adjacent scan planes **18**. The scan planes **18** are stored in the memory **20**, and then passed to a volume scan converter **42**. . . . The volume scan converter **42** creates a data slice from multiple adjacent scan planes **18**. The number of adjacent scan planes **18** that are obtained to form each data slice is dependent upon the thickness selected by slice thickness control input **40**. The data slice is stored in slice memory **44** and is accessed by a volume rendering processor **46**. The volume rendering processor **46** performs volume rendering upon the data slice. The output of the volume rendering processor **46** is passed to the video processor **50** and display **67**.

(Brandl ¶ 20; *see also* Final Act. 11–13, 15.)

*Analysis*

Appellants contend that the Examiner's reliance on Ramamurthy is misplaced, because even though it is the only reference in the cited combination that describes perfusion imaging, Ramamurthy nevertheless fails contemplate thick slice imaging or recognize the loss of sensitivity issues addressed by the claimed invention (App. Br. 13; Reply Br. 9)

We do not find Appellants' position persuasive. As an initial matter, we observe that Appellants' attacks on Ramamurthy in isolation are misplaced. *See In re Merck & Co., Inc.*, 800 F.2d 1091, 1097 (Fed. Cir. 1986) ("Non-obviousness cannot be established by attacking references individually where the rejection is based upon the teachings of a combination of references. . . . [The reference] must be read, not in isolation, but for what it fairly teaches in combination with the prior art as a whole.").

We further note, as discussed above, that the claims require neither thick slice imaging, nor recognizing loss of sensitivity. "[L]imitations are not to be read into the claims from the specification." *In re Van Geuns*, 988 F.2d 1181, 1184 (Fed. Cir. 1993). *See also In re Self*, 671 F.2d 1344, 1348 (CCPA 1982) ("[A]ppellant's arguments fail from the outset because . . . they are not based on limitations appearing in the claims.").

Moreover, we agree with the Examiner that Entrekin teaches imaging harmonic contrast agents, as well as combining image slices, and Brandl teaches thick slice imaging (Ans. 9–10; FF 5–15).

Appellants additionally assert that Entrekin and Brandl disclose volumetric imaging, rather than thick slice imaging (App. Br. 13–15; Reply Br. 9–10), and that neither reference teaches "a combiner as recited in the present claims" (App. Br. 14).

We are not persuaded. Claim 1 recites "a combiner, coupled to the slice memory, which combines slice image data in the elevation direction." Entrekin explicitly discloses the claimed combiner, teaching that "[m]ultiple scans can be performed and compounded" (FF 6; *see also* FF 10–12) and that "[a]fter resampling the image frames are compounded by a combiner **36**" (FF 8).

Brandl likewise suggests a combiner, disclosing that

> At each linear or arcuate position, the transducer **10** obtains scan planes **18**. The scan planes **18** are collected for a thickness, such as from a group or set of adjacent scan planes **18**. The scan planes **18** are stored in the memory **20**, and then passed to a volume scan converter **42**. . . . The volume scan converter **42** creates a data slice from multiple adjacent scan planes **18**. The number of adjacent scan planes **18** that are obtained to form each

> data slice is dependent upon the thickness selected by slice thickness control input **40**.

(FF 15.)

Appellants further argue that if the planes of Entrekin or Brandl "were combined in the sense of the present invention, the result would not be the desired volume image but a planar image" (App. Br. 14). More particularly, Appellants contend that the references do not combine parallel slice image data in the elevation direction (*id.* at 14–15).

We are not persuaded. Entrekin teaches that "[t]he echo data from the multiple look directions are compounded to form spatially compounded image data, which is processed for display in a three dimensional display format" (FF 5), "[t]he fully processed compounded image is then transmitted to the volume image rendering processor for rendering in a three dimensional display format" (FF 9), "[t]he volume image rendering processor **40** can operate to develop a 3D presentation of the spatially compounded volumetric image data" (FF 10), "the use of steered linear component frames in which the scanlines in each component frame are parallel and at differing angles from frame to frame" (FF 11), and "[t]his technique uses a two dimensional array transducer **212** which is capable of electronically steering beams in both the azimuth (AZ) direction and the elevation (EL) direction" (FF 12). Brandl teaches "[t]he transducer **10** is moved, such as along a linear or arcuate path, while scanning a region of interest (ROI)" (FF 15). Therefore, we are not persuaded by Appellants' contentions to the contrary. *See also In re Geisler*, 116 F.3d 1465, 1470 (Fed. Cir. 1997) ("[A]ttorney argument [is] not the kind of factual evidence that is required to rebut a prima facie case of obviousness").

Lastly, Appellants contend that Entrekin does not perform contrast imaging, perfusion studies, or harmonic imaging, and further assert that Entrekin fails recognize problems with low sensitivity (App. Br. 15).

We do not find these arguments persuasive. As noted above, Entrekin teaches "imaging harmonic contrast agents" (FF 7). Moreover, Appellants' arguments fail to account for Ramamurthy's contributions to the combination (FF 1–4). *See In re Keller*, 642 F.2d at 425 (CCPA 1981). *See also In re Van Geuns*, 988 F.2d at 1184 and *In re Self*, 671 F.2d at 1348.

Accordingly, we affirm the rejection of claim 1. Because the claims were not separately argued, claims 2–10 fall with claim 1.

IV.

The Examiner has rejected claims 11–18 under 35 U.S.C. § 103(a) as being obvious over Ramamurthy, Entrekin, Brandl, and Powers. Appellants present no additional argument based on the teachings of Powers, and rely on the same arguments addressed above with regard to Ramamurthy, Entrekin, and Brandl (*see* App. Br. 16–19). Therefore, we affirm the rejection of claim 11. Because the claims were not separately argued, claims 12–18 fall with claim 11.

SUMMARY

We reverse the rejection of claims 1–18 under 35 U.S.C. § 112(a) as failing to comply with the written description requirement.

We reverse the rejection of claims 1–18 under 35 U.S.C. § 112(b) as being indefinite.

We affirm the rejection of claim 1 under 35 U.S.C. § 103(a) based on Ramamurthy, Entrekin, and Brandl. Claims 2–10 fall with claim 1.

We affirm the rejection of claim 11 under 35 U.S.C. § 103(a) based on Ramamurthy, Entrekin, Brandl, and Powers. Claims 12–18 fall with claim 11.

TIME PERIOD FOR RESPONSE

No time period for taking any subsequent action in connection with this appeal may be extended under 37 C.F.R. § 1.136(a)(1)(iv).

AFFIRMED