UNITED STATES PATENT AND TRADEMARK OFFICE

UNITED STATES DEPARTMENT OF COMMERCE
United States Patent and Trademark Office
Address: COMMISSIONER FOR PATENTS
P.O. Box 1450
Alexandria, Virginia 22313-1450
www.uspto.gov

APPLICATION NO.	FILING DATE	FIRST NAMED INVENTOR	ATTORNEY DOCKET NO.	CONFIRMATION NO.
11/234,990	09/26/2005	Juan Carlos Ayala	10000/495	2797

48003 7590 10/16/2013
BRINKS GILSON & LIONE/CHICAGO/COOK
PO BOX 10395
CHICAGO, IL 60610

EXAMINER
FOREMAN, JONATHAN M

ART UNIT	PAPER NUMBER
3736	

MAIL DATE	DELIVERY MODE
10/16/2013	PAPER

Please find below and/or attached an Office communication concerning this application or proceeding.

The time period for reply, if any, is set in the attached communication.

UNITED STATES PATENT AND TRADEMARK OFFICE

BEFORE THE PATENT TRIAL AND APPEAL BOARD

Ex parte JUAN CARLOS AYALA,
DAVID M. HARDIN, and
JASON D. FOUSHEE

Appeal 2012-002970
Application 11/234,990
Technology Center 3700

Before DEMETRA J. MILLS, ERIC GRIMES, and
JEFFREY N. FREDMAN, *Administrative Patent Judges*.

FREDMAN, *Administrative Patent Judge*.

DECISION ON APPEAL

This is an appeal[1] under 35 U.S.C. § 134 involving claims to a steerable wire-guide for guiding an elongate medical device through a body lumen of a patient. The Examiner rejected the claims as anticipated and as obvious. We have jurisdiction under 35 U.S.C. § 6(b). We affirm-in-part.

---

[1] Appellants identify the Real Party in Interest as Wilson-Cook Medical Inc. (*see* App. Br. 2).

Statement of the Case

Background

"The present invention relates to wire-guides used in the placement of medical devices. More specifically, the present invention relates to a steerable wire-guide having a loop tip" (Spec. 1 ¶ 0002).

The Claims

Claims 1, 3-6, 8-16, 18-21, and 23-25 are on appeal (*see* App. Br. 2). Claims 1 and 25 are representative and read as follows:

> 1. A steerable wire-guide for guiding an elongate medical device through a body lumen of a patient comprising:
>
> an elongate member having a longitudinal axis, the elongate member comprising a leading portion and a body portion, the leading portion formed from the elongate wire folded to form a permanently closed loop, the body portion comprising a first wire and a second wire, the first and the second wires of the body portion oriented in a substantially parallel longitudinally movable arrangement relative to each other,
>
> wherein the elongate member further comprises a closure member fixedly connected about a proximal end of the leading portion and a distal end of the body portion, and wherein the first and second wires are longitudinally movable relative to each other such that relative distal movement of the first wire with respect to the second wire directs the leading portion in a first direction at an angle relative to the longitudinal axis, and relative distal movement of the second wire with respect to the first wire directs the leading portion in a second direction different from the first direction, wherein the wire guide is configured to be movably disposed through a lumen of the elongate medical device, and wherein the first and second wires are configured to be longitudinally movable relative to each other while disposed through the lumen of the elongate medical device so as to direct the leading portion in at least one of the first and second direction.

> 25. A steerable wire-guide for guiding an elongate medical device through a body lumen of a patient comprising:
>
> an elongate member having a longitudinal axis, the elongate member comprising a leading portion and a body portion, the body portion comprising a first wire and a second wire, the first wire and the second wire being moveable relative to each other such that relative distal movement of the first wire with respect to the second wire directs the leading portion in a first direction at an angle relative to the longitudinal axis, and relative distal movement of the second wire with respect to the first wire directs the leading portion in a second direction different from the first direction, and
>
> further wherein the body portion further comprises a third wire, the third wire being movable relative to the first and second wires such that movement of the third wire with respect to the first and the second wires causes the leading portion to move in a predetermined third direction, the predetermined third direction being different from the first and second directions, *wherein each of the first, the second, and the third wires converge at a single location*, and wherein leading portion comprises a distal portion of the third wire that extends distally beyond a distal terminus of the first and second wires.

(Emphasis added).

The issues

A. The Examiner rejected claim 25 under 35 U.S.C. § 102(b) as anticipated by Li[2] (Ans. 4-5).

B. The Examiner rejected claims 1, 3, 5, 6, 8-16, 18-21, 23, and 24 under 35 U.S.C. § 103(a) as obvious over Bakos[3] and Walker[4] (Ans. 6-8).

C. The Examiner rejected claim 4 under 35 U.S.C. § 103(a) as obvious over Bakos, Walker, and Li (Ans. 8).

---

[2] Li et al., U.S. 5,879,295, issued Mar. 9, 1999.
[3] Bakos et al., U.S. 2004/1099088 A1, published Oct. 7, 2004.
[4] Walker, S., U.S. 892,472, issued Jul. 7, 1908.

A. 35 U.S.C. § 102(b) over Li

The Examiner finds that the "first, the second, and the third wires disclosed by Li converge at a single location, the single location being the distal end of the first wire. It is noted that the claims do not require the wires to converge at a single point" (Ans. 8). The Examiner finds that the "limitation 'single location' encompasses more than the wires each meeting at one point" (Ans. 9).

Appellants contend that "Li is directed to a catheter and not a wire guide. More importantly, Li does not disclose a steerable wire guide having three wires that converge at a single location. To the contrary, each of the embodiments disclosed in Li utilizes a pair of wires (26 and 28) that engage the shaft of a catheter (30) at spaced apart locations" (App. Br. 8).

The issue with respect to this rejection is: Does the evidence of record support the Examiner's conclusion that Li teaches a device "wherein each of the first, the second, and the third wires converge at a single location" as required by claim 25?

Findings of Fact

1. Figure 3 of Li is reproduced below:

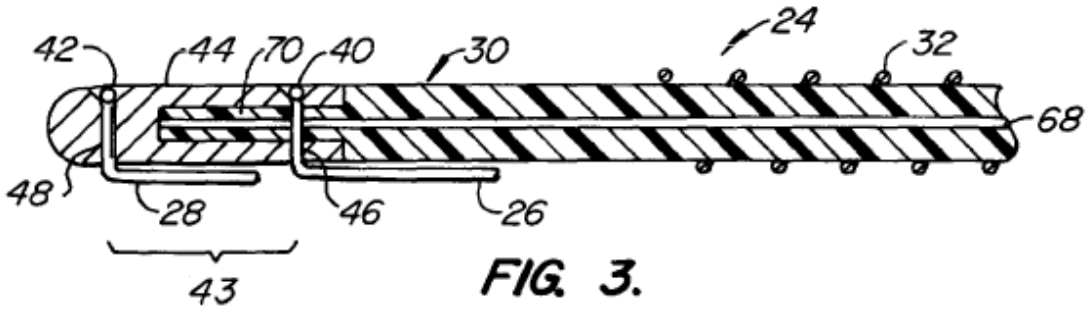

FIG. 3.

"FIG. **3** is a simplified partial cross-sectional view of the distal end of the tip portion of the catheter body" (Li, col. 4, ll. 19-20).

2. Li teaches that:

> Catheter body **24** is coupled to first manipulator **12**, manipulator wires **26**, **28** are coupled to second and third manipulators **14**, **16**, and sheath **22** is coupled to fourth manipulator **18**. Manipulator wires **26**, **28** are flexible but are sufficiently stiff and have sufficient columnar strength so that they can apply significant pushing forces against tip portion **30** at positions **40**, **42**.

(Li, col. 5, ll. 26-39).

3. Figure 34 of the Specification is reproduced below:

FIG 34

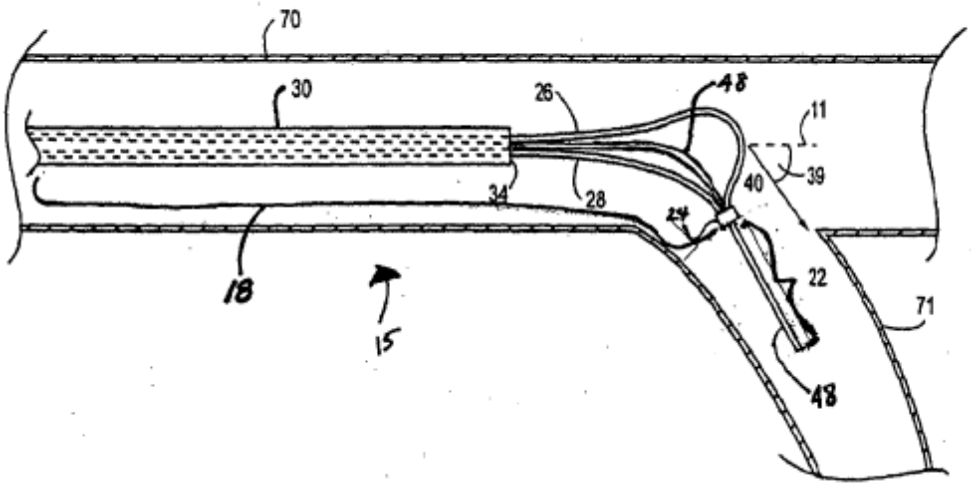

"Figure 34 is a side view illustrating an alternative embodiment of a steerable wire-guide" (Spec. 7 ¶ 0054).

Principles of Law

"A single prior art reference that discloses, either expressly or inherently, each limitation of a claim invalidates that claim by anticipation." *Perricone v. Medicis Pharmaceutical Corp.*, 432 F.3d 1368, 1375 (Fed. Cir. 2005).

Analysis

We begin with claim interpretation, since before a claim is properly interpreted, its scope cannot be compared to the prior art. The limitation at issue is "wherein each of the first, the second, and the third wires converge at a single location" in claim 25.

During prosecution, claim terms are given their broadest reasonable interpretation as they would be understood by persons of ordinary skill in the art in the light of the Specification. Therefore, we first turn to the Specification to interpret these phrases.

While the Specification does not define the phrase "converge at a single location", Figure 34 provides descriptive support of an example where three wires converge at a single location. While we agree with the Examiner that a drawing in the Specification does not necessarily impose a specific limitation on the breadth of claim interpretation by the USPTO, we find that the ordinary artisan would have interpreted the word "converge" consistent with its ordinary dictionary meaning of "to tend to meet in a point or line."[5] The ordinary artisan would not reasonably interpret the wires of Li as converging, as that word is ordinarily interpreted, since the three wires do not meet at a point or line.

Conclusion of Law

The evidence of record does not support the Examiner's conclusion that Li teaches a device "wherein each of the first, the second, and the third wires converge at a single location" as required by claim 25.

---

[5] Dictionary.com, http://dictionary.reference.com/browse/converge?s=t&path=/, accessed October 11, 2013.

B. 35 U.S.C. § 103(a) over Bakos and Walker

The Examiner finds that Bakos teaches

> a wire guide configured to be movably disposed through a lumen of an elongate medical device [0042] including a tubular member (55) including a lumen between a tubular member proximal end and a tubular member distal end; an elongate member comprising a longitudinal axis, a leading portion and a body portion, the body portion comprising a first wire (54) and a second wire (52)

(Ans. 6). The Examiner finds that Bakos "fails to disclose the elongate member further comprising a closure member fixedly connected about a proximal end of the leading portion and a distal end of the body portion in order to form a permanently closed loop in the leading portion" (Ans. 7). The Examiner finds that "Walker disclosed an elongate member including a closure member (4) fixedly connected about a proximal end of a leading portion and a distal end of the body portion in order to form a permanently closed loop (5) in the leading portion in order to avoid damaging the body lumen upon insertion" (Ans. 7).

The Examiner finds it obvious to "modify the elongate member as disclosed by Bakos et al. to include a closure member as taught by Walker in order to create a permanently closed loop in the leading portion in order to form a blunt end in the guide wire to avoid perforating or otherwise injuring the vessels during insertion" (Ans. 7).

The issue with respect to this rejection is: Does the evidence of record support the Examiner's conclusion that Bakos and Walker render obvious a guide where "the elongate wire [is] folded to form a permanently closed loop" as required by claim 1?

Findings of Fact

4. Bakos teaches that the "the invention is directed to a guide wire structure which can be inserted into an interior space within a human or animal body, such as the gastrointestinal (GI) tract of a human patient" (Bakos 1 ¶ 0002).

5. Figures 1b and 1c of Bakos are reproduced below:

FIG. 1b

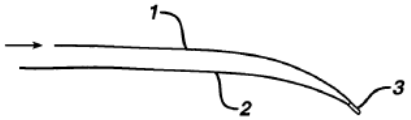

FIG. 1c

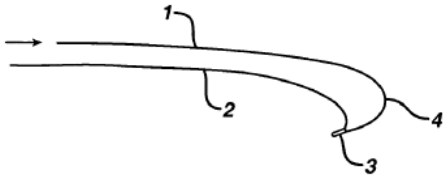

"**FIG**. **1***b* shows the structure . . . when one of its guide wires is advanced rightwardly and the other is held steady; **FIG**. **1***c* shows the structure . . . after further righthand advance of one of the guide wires" (Bakos 1 ¶¶ 0010-0011).

6. Bakos teaches

> causing the structure to become curved, as shown in **FIG**. **1***b*, enables the physician to steer the leading end of the structure round bends in the lumen through which the structure is being advanced. The ability to form a loop, as illustrated in **FIG**. **1***c*, enables the guide wire structure to adopt a[ ] configuration in which it can be safely advanced along the lumen, without undue discomfort for the patient.

(Bakos 3 ¶ 0034).

7. Walker teaches "an improved instrument for the removal of worms, mucous and other obstructive matter from the throats of fowls" (Walker, col. 1, ll. 9-12).

8. Figure 1 of Walker is reproduced below:

"Figure 1 is a view in elevation of the instrument" (Walker, col. 1, ll. 21-22).

9. Walker teaches that "the wires are again bent to form a loop 5, there-by forming a blunt end to the instrument to avoid perforating or otherwise injuring the throat of the fowl in the use of the instrument therein" (Walker, col. 1, ll. 37-42).

Principles of Law

To establish a prima facie case of obviousness, the Examiner must find "a reason that would have prompted a person of ordinary skill in the relevant field to combine the elements in the way the claimed new invention does." *KSR Int'l Co. v. Teleflex Inc.*, 550 U.S. 398, 418 (2007). "If a person of ordinary skill can implement a predictable variation, § 103 likely bars its patentability." *Id*. at 417.

Analysis

Appellants do not dispute that Bakos teaches a steerable wire-guide for guiding an elongate medical device through a body lumen of a patient, conceding that "Bakos appears to disclose a steerable wire guide" (App. Br. 8). Appellants note that Bakos fails to teach "a leading portion comprising a closed loop" (App. Br. 8). Appellants contend that "Walker is directed to an

extracting device for extracting gape worms from poultry. Walker does not disclose a wire guide, let alone a steerable wire guide. It would not be obvious to one skilled in the art of wire guides to combine the teachings of Walker with Bakos" (App. Br. 8).

We interpret this argument in two ways, first that Appellants contend that Walker is non-analogous art, and second, that there is no reason to incorporate the closed loop of Walker into the wire guide of Bakos.

The test for non-analogous art is first whether the art is within the field of the inventor's endeavor and, if not, whether it is "reasonably pertinent to the particular problem with which the inventor was involved." *In re Wood*, 599 F.2d 1032, 1036 (CCPA 1979). "A reference is reasonably pertinent if, even though it may be in a different field" of endeavor, it logically would have commended itself to an inventor's attention in considering his problem "because of the matter with which it deals." *In re Clay*, 966 F.2d 656, 659 (Fed. Cir. 1992).

While we agree with Appellants that Walker is not within the same field of endeavor as Bakos or the claimed invention, Bakos is concerned with a device which is inserted into the gastrointestinal tract of a human or animal (FF 4) and which "can be safely advanced along the lumen, without undue discomfort for the patient" (Bakos 3 ¶ 0034; FF 6). Walker addresses essentially the same concern of safely advancing a device into the gastrointestinal tract, teaching "forming a blunt end to the instrument to avoid perforating or otherwise injuring the throat of the fowl in the use of the instrument therein" (Walker, col. 1, ll. 37-42; FF 9).

When the question of pertinence is framed in the context of wire devices being inserted into the gastrointestinal tract in a safe manner, then the closed wire loop of Walker is reasonably viewed as pertinent to the steerable wire guide of Bakos, since that loop functions to reduce injury to a lumen in the gastrointestinal tract, a concern of both Bakos and Walker (FF 6, 9).

The same analysis supports the Examiner's finding of a reason to combine these references, where the Examiner finds it obvious to "modify the elongate member as disclosed by Bakos et al. to include a closure member as taught by Walker in order to create a closed loop in the leading portion in order to form a blunt end in the guide wire to avoid perforating or otherwise injuring the vessels during insertion" (Ans. 9). We agree that the ordinary artisan, concerned with safely advancing the wire guide of Bakos down the lumen of the gastrointestinal tract of a human or animal (FF 6), would have reasonably found Walker's teaching that a closed loop blunt end avoids perforating or injuring such a lumen of an animal (FF 9), as providing a "reason that would have prompted a person of ordinary skill in the relevant field to combine the elements in the way the claimed new invention does." *KSR*, 550 U.S. at 418.

Conclusion of Law

The evidence of record supports the Examiner's conclusion that Bakos and Walker render obvious a guide where "the elongate wire [is] folded to form a permanently closed loop" as required by claim 1.

C. 35 U.S.C. § 103(a) over Bakos, Walker, and Li

The Examiner provides sound fact-based reasoning for combining a device with a third wire with the steerable wire apparatus of Bakos and Walker (*see* Ans. 8). We adopt the fact finding and analysis of the Examiner as our own. Appellants do not separately argue this rejection. Therefore, consistent with the rejection which we affirmed above, we affirm this rejection for the reasons stated by the Examiner.

SUMMARY

In summary, we reverse the rejection of claim 25 under 35 U.S.C. § 102(b) as anticipated by Li.

We affirm the rejection of claim 1 under 35 U.S.C. § 103(a) as obvious over Bakos and Walker. Pursuant to 37 C.F.R. § 41.37(c)(1), we also affirm the rejection of claims 3, 5, 6, 8-16, 18-21, 23, and 24, as these claims were not argued separately.

We affirm the rejection of claim 4 under 35 U.S.C. § 103(a) as obvious over Bakos, Walker, and Li.

No time period for taking any subsequent action in connection with this appeal may be extended under 37 C.F.R. § 1.136(a).

AFFIRMED-IN-PART

lp