AO 120 (Rev. 08/10)

TO:	Mail Stop 8 Director of the U.S. Patent and Trademark Office P.O. Box 1450 Alexandria, VA 22313-1450	REPORT ON THE FILING OR DETERMINATION OF AN ACTION REGARDING A PATENT OR TRADEMARK

In Compliance with 35 U.S.C. § 290 and/or 15 U.S.C. § 1116 you are hereby advised that a court action has been filed in the U.S. District Court Northern District of Illinois on the following

☐ Trademarks or ☑ Patents. (☐ the patent action involves 35 U.S.C. § 292.):

DOCKET NO.	DATE FILED	U.S. DISTRICT COURT
15cv3972	5/5/2015	Northern District of Illinois

PLAINTIFF	DEFENDANT
Raster Printing Innovations, LLC	Eastman Kodak Compamy

PATENT OR TRADEMARK NO.	DATE OF PATENT OR TRADEMARK	HOLDER OF PATENT OR TRADEMARK
1 See Attachment		
2		
3		
4		
5		

In the above—entitled case, the following patent(s)/ trademark(s) have been included:

DATE INCLUDED	INCLUDED BY ☐ Amendment ☐ Answer ☐ Cross Bill ☐ Other Pleading	
PATENT OR TRADEMARK NO.	DATE OF PATENT OR TRADEMARK	HOLDER OF PATENT OR TRADEMARK
1		
2		
3		
4		
5		

In the above—entitled case, the following decision has been rendered or judgement issued:

DECISION/JUDGEMENT

CLERK	(BY) DEPUTY CLERK	DATE
Thomas G. Bruton	Jacquline Hollimon	5/19/2015

Copy 1—Upon initiation of action, mail this copy to Director **Copy 3—Upon termination of action, mail this copy to Director**
Copy 2—Upon filing document adding patent(s), mail this copy to Director **Copy 4—Case file copy**

US005796411A

United States Patent [19]

Cyman et al.

[11] Patent Number: 5,796,411

[45] Date of Patent: Aug. 18, 1998

[54] HIGH RESOLUTION REAL TIME RASTER IMAGE PROCESSING SYSTEM AND METHOD

[75] Inventors: **Theodore F. Cyman**, Grand Island; **Edward W. Schimminger**, Tonawanda; **Frank J. Rocco**, Lockport; **Carl F. Armstrong**, Buffalo; **Frank J. Mariani**, Grand Island, all of N.Y.

[73] Assignee: **Moore Business Forms, Inc.**, Grand Island, N.Y.

[21] Appl. No.: **500,011**

[22] Filed: **Jul. 10, 1995**

[51] **Int. Cl.**[6] **G06F 15/16**

[52] **U.S. Cl.** **345/502**; 395/101; 395/104; 395/110

[58] **Field of Search** 395/101, 104, 395/109, 110, 114–116, 167, 171, 501, 502, 507, 509; 358/296, 448; 345/501, 502, 507, 509

[56] **References Cited**

U.S. PATENT DOCUMENTS

5,003,496	3/1991	Hunt, Jr. et al.	395/134
5,109,476	4/1992	Thompson	395/105
5,113,494	5/1992	Menendez et al.	395/502
5,146,554	9/1992	Statt	395/128
5,506,941	4/1996	Kurumida	395/109
5,528,374	6/1996	Matias	358/296
5,572,631	11/1996	Kavathekar et al.	395/115
5,572,632	11/1996	Laumeyer et al.	395/109

OTHER PUBLICATIONS

Output Devices: Faster RIPs and Recorders by Alexander et al, Seybold Report on Publishing Systems, v. 22, No. 16, May 19, 1993.

Moore Business Forms, "Operator's Manual, XL Data System Version 2.01." Jun. 1992.

Moore Business Forms, "G–RIP, Generic Raster Image Processor, SCITEX Engine Control Module (ECM), Technical Reference." Mar. 15, 1995.

Moore Business Forms, "C–RIP Color Raster Image Processor, Operator's Guide & Technical REference." Nov. 28, 1995.

Moore Business Forms, "G–RIP, Generic Raster Image Processor, SCITEX Engine Control Module (ECM), Operator's Guide." Mar. 15, 1995.

Moore Business Forms, "G–RIP/SD MICA, Generic Raster Image Processor/Scaled–Down Version driving the MOORE Independent Cartridge Array, Operator's Guide." Oct. 12, 1995.

Moore Business Forms, "Generic RIP SD Technical Reference", undated.

Moore Business Forms, "G–RIP Generic Raster Image Processor, Set Up & Test Procedures." Mar. 15, 1995.

Primary Examiner—Kee M. Tung
Attorney, Agent, or Firm—Nixon & Vanderhye, PC.

[57] **ABSTRACT**

A raster image processing system and method that can keep up with the fastest high resolution printers now available can process images "on the fly"—that is, generate images from compact input representations so rapidly that printing can occur substantially in the same real time as raster image processing of input data. This system is capable of automatically "screening" data relating to the images so that the various gray scales or color levels are correct for a contone printing process. Different print engine control modules can be replaceably plugged into and out of the system to allow it to be used with different types of print engines/intelligent imaging systems—including high speed, high resolution color printing engines. A high speed data cache and associated array disk drive provide high speed throughput of data into the system. The disk array may, for example, store a library of high resolution graphics that can be accessed "on the fly" as needed in response to the input data stream. A graphics accelerator can generate, on the fly, many "primitive" or simple graphics (e.g. angles, lines, boxes, etc.) at the same time that the remainder of the print image is being generated.

6 Claims, 16 Drawing Sheets

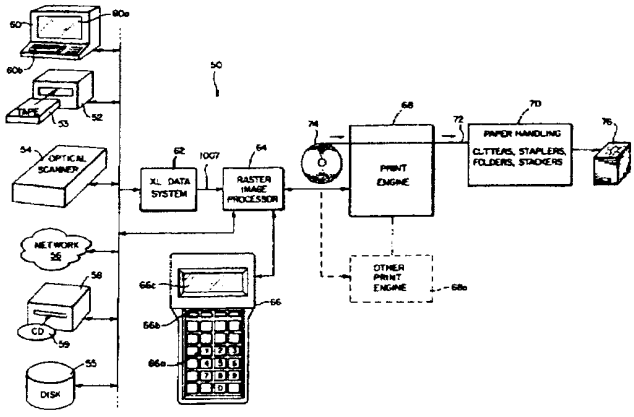

US005828814A

United States Patent [19]

Cyman et al.

[11] Patent Number: 5,828,814

[45] Date of Patent: Oct. 27, 1998

[54] **REDUCED COST HIGH RESOLUTION REAL TIME RASTER IMAGE PROCESSING SYSTEM AND METHOD**

[75] Inventors: **Theodore F. Cyman**; **Kevin P. Kernin**, both of Grand Island; **Robert J. Recchione**, Niagara Falls; **Anthony L. Treis**, North Tonawanda, all of N.Y.

[73] Assignee: **Moore Business Forms, Inc.**, Grand Island, N.Y.

[21] Appl. No.: **709,848**

[22] Filed: **Sep. 10, 1996**

[51] **Int. Cl.**[6] **G06K 15/00**

[52] **U.S. Cl.** **395/102**; 395/112

[58] **Field of Search** 395/110, 112, 395/114, 115, 116, 833, 834, 882, 884, 892; 400/61, 62, 67, 76; 358/442, 444

[56] **References Cited**

U.S. PATENT DOCUMENTS

5,003,496	3/1991	Hunt, Jr. et al. .	
5,109,476	4/1992	Thompson .	
5,113,494	5/1992	Menendez et al.	395/163
5,146,554	9/1992	Statt .	
5,506,941	4/1996	Kurumida .	
5,528,374	6/1996	Matias .	
5,572,631	11/1996	Kavathekar et al.	395/115
5,572,632	11/1996	Laumeyer et al. .	

FOREIGN PATENT DOCUMENTS

470782	2/1992	European Pat. Off. .
597571	5/1994	European Pat. Off. .
WO 95/28685	10/1995	WIPO .
WO 96/19352	6/1996	WIPO .

OTHER PUBLICATIONS

Alexander et al., "Output Devices: Faster RIPs and Recorders," *Seybold Report on Publishing Systems,* V.22, n.16, May 19, 1993.

Primary Examiner—Arthur G. Evans
Attorney, Agent, or Firm—Nixon & Vanderhye P.C.

[57] **ABSTRACT**

A reduced cost, scaled down raster image processor (RIP) provides fast real time imaging without the cost and complexity of prior designs. The scaled down RIP can be tailored to accommodate image generation in a particular printing range to efficiently run print bars at a reduced equipment cost. The scaled down RIP utilized a personality module in conjunction with a scaled down controller to provide limited print information to a print engine. The personality module tailors the system for a particular print engine, such as a Moore® Independent Cartridge Array (MICA) ink jet printer. The personality module is responsible for requesting and reading raster data to build up the staging RAM. A pair of EEPROMs may be used to control each bar read according to the position and distance from the other. Pixel data is then sent to the service station along with the print bar address. The personality module outputs the sequence of pixel data to the service station for imaging, interfaces the display and keyboard information, and transfers the various offsets to a control ASIC for rehandling the pixel data at the staging RAM.

19 Claims, 23 Drawing Sheets

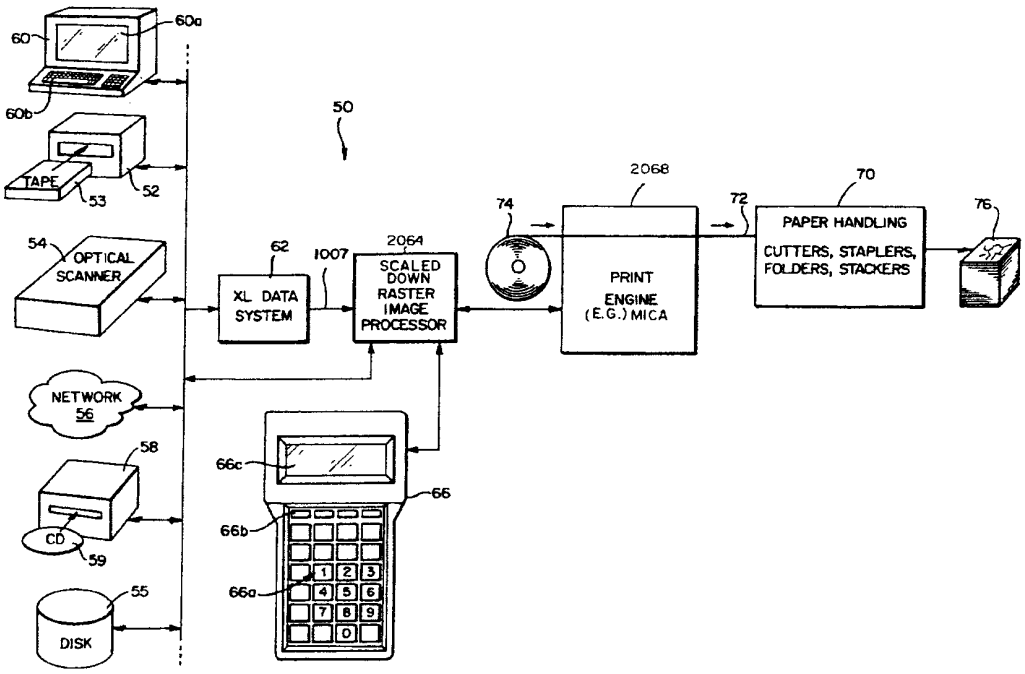

US005949438A

United States Patent [19]

Cyman et al.

[11] Patent Number: 5,949,438

[45] Date of Patent: *Sep. 7, 1999

[54] HIGH RESOLUTION REAL TIME RASTER IMAGE PROCESSING SYSTEM AND METHOD

[75] Inventors: **Theodore F. Cyman**, Grand Island; **Edward W. Schimminger**, Tonawanda; **Frank J. Rocco**, Lockport; **Carl F. Armstrong**, Buffalo; **Frank J. Mariani**, Grand Island, all of N.Y.

[73] Assignee: **Moore Business Forms, Inc.**, Grand Island, N.Y.

[*] Notice: This patent is subject to a terminal disclaimer.

[21] Appl. No.: **08/996,995**

[22] Filed: **Dec. 23, 1997**

Related U.S. Application Data

[63] Continuation of application No. 08/500,011, Jul. 10, 1995, Pat. No. 5,796,411.

[51] **Int. Cl.**[6] **G06F 15/16**

[52] **U.S. Cl.** **345/502**; 345/192; 345/467; 395/101; 395/104; 395/110

[58] **Field of Search** 395/101, 102, 395/104, 109, 110, 111, 114–116; 345/501, 502, 507–509, 467–468, 192–195

[56] **References Cited**

U.S. PATENT DOCUMENTS

5,003,496	3/1991	Hunt, Jr. et al.	345/430
5,109,476	4/1992	Thompson	395/105
5,113,494	5/1992	Menendez et al.	345/502
5,146,554	9/1992	Statt	345/428
5,528,374	6/1996	Matias	358/444

OTHER PUBLICATIONS

Seybold Report on Publishing Systems, V22, n16, ps10(2) "Output Devices: Faster RIPs and Recorders", Alexander et al, May 19, 1993.

Primary Examiner—Kee M. Tung
Attorney, Agent, or Firm—Nixon & Vanderhye, P.C.

[57] **ABSTRACT**

A raster image processing system and method that can keep up with the fastest high resolution printers now available can process images "on the fly"—that is, generate images from compact input representations so rapidly that printing can occur substantially in the same real time as raster image processing of input data. This system is capable of automatically "screening" data relating to the images so that the various gray scales or color levels are correct for a contone printing process. Different print engine control modules can be replaceably plugged into and out of the system to allow it to be used with different types of print engines/intelligent imaging systems—including high speed, high resolution color printing engines. A high speed data cache and associated array disk drive provide high speed throughput of data into the system. The disk array may, for example, store a library of high resolution graphics that can be accessed "on the fly" as needed in response to the input data stream. A graphics accelerator can generate, on the fly, many "primitive" or simple graphics (e.g, angles, lines, boxes, etc.) at the same time that the remainder of the print image is being generated.
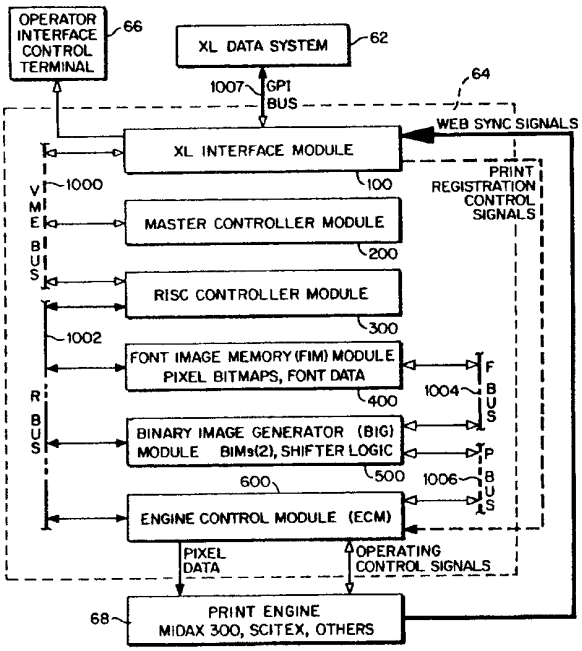
14 Claims, 16 Drawing Sheets