UNITED STATES PATENT AND TRADEMARK OFFICE

UNITED STATES DEPARTMENT OF COMMERCE
United States Patent and Trademark Office
Address: COMMISSIONER FOR PATENTS
P.O. Box 1450
Alexandria, Virginia 22313-1450
www.uspto.gov

APPLICATION NO.	FILING DATE	FIRST NAMED INVENTOR	ATTORNEY DOCKET NO.	CONFIRMATION NO.
90/011,112	07/26/2010	6616909	086353-0059	6455

29171 7590 01/22/2013
BATTELLE MEMORIAL INSTITUTE
ATTN: IP LEGAL SERVICES, K1-53
P.O. BOX 999
RICHLAND, WA 99352

EXAMINER
JOHNSON, JERRY D

ART UNIT	PAPER NUMBER
3991	

MAIL DATE	DELIVERY MODE
01/22/2013	PAPER

Please find below and/or attached an Office communication concerning this application or proceeding.

The time period for reply, if any, is set in the attached communication.

UNITED STATES PATENT AND TRADEMARK OFFICE

BEFORE THE PATENT TRAIL AND APPEALS BOARD

Ex parte BATTELLE MEMORIAL INSTITUTE,
Patent Owner and Appellant

Appeal 2012-012339
Reexamination control 90/011,112
Patent 6,616,909 B1
Technology Center 3900

Before RICHARD M. LEBOVITZ, JEFFREY B. ROBERTSON, and RAE LYNN P. GUEST, *Administrative Patent Judges*.

GUEST, *Administrative Patent Judge*.

DECISION ON APPEAL

I. STATEMENT OF CASE

Battelle Memorial Institute (hereinafter "Appellant"), the real party in interest[1] of Patent 6,616,909 B1 (hereinafter the '"909 patent"), appeals under 35 U.S.C. §§ 134(b) and 306 from the Examiner's decision to reject claims 19 and 55

---

[1] See Appellant's Appeal Brief filed November 14, 2011 (hereinafter "App. Br.") at 1.

under 35 U.S.C. § 103(a) as unpatentable over Wegeng[2] (Final Office Action, mailed April 14, 2011, pages 4-5). We have jurisdiction under 35 U.S.C. §§ 134(b) and 306. An oral hearing took place on January 9, 2013. A transcript of the oral hearing will be made of record in due course.

We REVERSE.

This reexamination proceeding arose from a third-party request for *ex parte* reexamination filed by CompactGTL plc (Request for *Ex Parte* Reexamination, filed July 26, 2010 (hereinafter "Request")).

The '909 patent relates to reactors and processes that can utilize high heat fluxes to obtain fast, steady-state reaction rates ('909 patent, Abstract).

Representative claim 19 on appeal reads as follows (with indentations added for clarity):

> 19. A process for the catalytic conversion of at least one reactant in a thermal chemical reaction, excluding deep oxidation, comprising:
>
> passing at least one reactant into at least one reaction chamber; said reaction chamber comprising a catalyst that catalyzes the reaction of said at least one reactant;
>
> transferring heat to or from said at least one reaction chamber from or into said at least one heat exchanger; and
>
> obtaining at least one product from said reaction chamber;
>
> wherein said step of transferring heat, at steady-state, transfers at least 0.6 W of heat per cc of total reactor volume, such that, at steady state, the, catalyst is maintained within a temperature range that

[2] US 5,811,062 issued September 22, 1998 to Robert S. Wegeng, et al. (hereinafter "Wegeng").

> reduces the formation of at least one undesirable chemical reaction product.

(Claims App'x, App. Br. i.)

Independent claim 55 is substantially similar to claim 19 but recites that "wherein said step of transferring heat, at steady rate, transfers between about 10 and about 100 W/cc of total reactor volume" (*id.*).

II. THE REJECTION

The Examiner finds that Wegeng teaches a microchannel reactor comprising a first laminate reactor containing a catalyst coating and a second laminate heat exchanger (Ans. 6) (citing col. 10, l. 63 to col. 11, l. 21 and Figure 9).

The Examiner indicates that Wegeng does not disclose the amount of heat produced in a process of catalytic conversion (*id.*). However, the Examiner relies on calculations provided in the Request as evidence that the claimed heat flux per total reactor volume would have been obvious in view of the structures described by Wegeng (*id.*). The Examiner concludes that it would have been obvious for one skilled in the art at the time of the invention to use a microchannel reactor for a catalytic conversion (e.g. partial oxidation) and transfer the claimed volumetric heat flux (*id.*).

The Examiner further explains that the disclosed microcomponent structure of Example 4 (Figure 16a) of Wegeng "can transfer" the claimed heat per total reactor volume (Ans. 7). Although Example 4 is directed to a non-catalytic combustion reaction, the Examiner explains that it would have been obvious to perform a partial oxidation reaction in the reactor of Figure 9 or Figure 16a, since both the partial oxidation reaction and the combustion reaction are conversion reactions as taught by Wegeng (*id.*) (citing col. 5, ll. 49-50).

III. ISSUE ON APPEAL

The issue on appeal is: Whether the evidence supports the Examiner's conclusion that a method of performing a catalytic reaction with the claimed heat transfer rate/cc of total reactor volume would have been obvious to one of ordinary skill in the art having the teachings of Wegeng?

IV. FINDINGS OF FACT

FF1. The '909 patent expressly defines total reactor volume as "the sum of the volume of the reaction chamber(s) and heat exchanger chamber(s) including the volume of chamber walls" (col. 3, ll. 40-42).

FF2. In Example 1, Wegeng describes a microscale condenser with respect to Figure 4 as a "test assembly" (col. 3, l. 43; col. 7, ll. 17-19).

FF3. The condenser includes a groove set piece (bottom laminate) and manifold (cover laminate). The groove set piece defines a groove set of 2.3cm x 2cm x 1mm. The manifold has a raised roof leaving at most 0.1 to 0.01 mm of space between the groove set and the undersurface of the raised roof. (Col. 7, ll. 19-34.)

FF4. Example 1 provides a heat transfer rate of 6 to 8 Watts/cm^2 for the working area of the heat exchanger, which was calculated from an enthalpy change of 155 joules/g and condensate flow rate of 0.150 – 0.205 g/s (col. 7, ll. 41-52).

FF5. Example 1 does not include a reactor.

FF6. Example 1 does not describe the overall dimensions of the groove set piece or the manifold, including the thicknesses thereof.

FF7. The Request calculates the volumetric heat flux by "[t]aking the total thickness of the microchannel device as 2mm" for a total volume of 2.3 x 2 x 0.2 =

0.92 cubic centimeters, "resulting in a power density [volumetric heat transfer] of between 24 and 32 W/cc" (Request 14).

FF8. In Example 4, Wegeng describes a combustion reactor with respect to Figure 16a (col. 14, ll. 33-35).

FF9. Figure 16a is reproduced below:

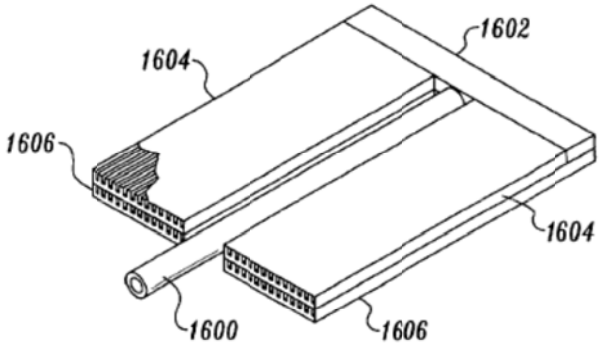

Fig. 16a.

Figure 16a is an isometric view of a combustion reactor (col. 4, l. 11).

FF10. The combustion reactor has fuel and oxidizer enter a ceramic tube 1600 which are ignited such that combustion products pass through header 1602 and into gas flow laminate 1604. Water is passed through water flow laminate 1606. (Col. 14, ll. 35-39.)

FF11. Example 4 describes that the grooves are 300 micrometers wide x 500 micrometers deep x 34 millimeters long and that the area of heat transfer is 9.98 cm^2 (col. 14, ll. 40-44).

FF12. Example 4 describes heat transfer rates of between 1 and 27 W/cm^2 plotted against combustion efficiency in Figure 16b for a water flow rate of 1.28 to 1.32 g/s (col. 14, ll. 49-50; col. 4, ll. 12-13).

FF13. Example 4 provides no dimensions for ceramic tube 1600 or the volume of laminates 1604 and 1606, particularly including the exterior walls thereof.

FF14. The Request calculates the volumetric heat flux by "[t]aking the total thickness of the microchannel device as 2mm" and using the area of heat transfer of 9.98 cm^2 to determine a resulting volumetric heat transfer of between 10 and 135 W/cc (Request 14).

FF15. Wegeng describes a microchannel reactor with respect to Figure 9 where the microchannels 908 of a first laminate 902 contain a catalytic coating permeate, membrane or absorbent (i.e. a reactor for catalytic reactions) (col. 10, l. 63 to col. 11, l. 8).

FF16. Figure 9 is reproduced below.

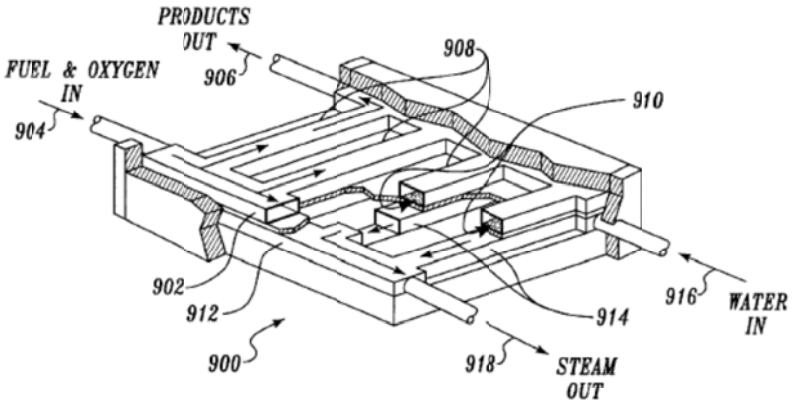

Fig. 9.

Figure 9 depicts a partial cut-away view of a chemical process system (col. 3, l. 61).

FF17. Wegeng describes reaction microchannels in close proximity to cooling medium microchannels for reactions like partial oxidation reactions wherein it is desired to control the reaction temperature (col. 11, ll. 13-17).

FF18. Wegeng provides no dimensions for the structure of Figure 9.

V. ANALYSIS

Patent Owner contends that neither the calculations of Example 1 nor Example 4 of Wegeng provided by the Requester provide sufficient evidence of the claimed heat flux per cc of the total reactor volume (App. Br. 7-8). Namely, Patent Owner argues that the calculations make unsupported assumptions as to the overall thickness of the heat exchanger volume of Wegeng and fail to include a reactor volume as required by the express definition in the '909 patent of "total reactor volume" (*id.*).

Further Patent Owner contends that neither of the structures described for Example 1 and Example 4 is a "reaction chamber comprising a catalyst that catalyzes the reaction of said at least one reactant" and that the reactor of Example 4 is for a "deep oxidation," or combustion, reaction that is expressly excluded from the claims (*id.* 8). Patent Owner explains that there is no evidence that optimizing the described partial oxidation reaction of Wegeng (in a structure such as described in Figure 9) would result in the claimed levels of volumetric heat flux (Reply Br. 3).

Rejections based on § 103(a) must rest on a factual basis without hindsight reconstruction of the invention from the prior art. *In re Warner*, 379 F.2d 1011, 1016-17 (CCPA 1967) (A rejection based on section 103 must have "the necessary factual basis to support the conclusion that it would have been obvious to one of ordinary skill to bring the elements together."); *In re Kahn*, 441 F.3d 977, 988 (Fed. Cir. 2006) ("[R]ejections on obviousness grounds cannot be sustained by

mere conclusory statements; instead, there must be some articulated reasoning with some rational underpinning to support the legal conclusion of obviousness.”).

We agree with Patent Owner that the Examiner has not provided sufficient evidence that performing a catalytic reaction with the claimed volumetric heat flux would have been obvious to one of ordinary skill in the art at the time of the invention. We agree with Patent Owner that the calculations provided by the Requester, when considered in light of the express definition of “total reactor volume” in the Specification, appear to be facially flawed. The Examiner has not shown how the calculations take into consideration the volumes of both the heat exchanger and reactor volumes “including the volume of chamber walls.” (*See* FF 1, 6, 7, 13, 14, 18.) Thus, the calculations are based on assumptions without evidentiary support and fail to constitute an equivalent measurement of volumetric heat flux to that claimed. The Examiner notes that despite the apparent flaws in the calculations, “it is reasonable to conclude that the processes disclosed by Wegeng transfer heat in” the claimed amounts (Ans. 7). We cannot agree that such a conclusion is reasonable without additional evidentiary support.

The Examiner further has not provided sufficiently persuasive evidence that a skilled artisan would have utilized the structure of Figure 16a with a catalyst as required by the claims. Wegeng describes an entirely different structure for a catalytic reaction, namely that of Figure 9. (FF 8-10, 15-17.) Thus, there is insufficient evidence that one of ordinary skill in the art would have used the combustion reactor of Figure 16(a) with a catalyst. *In re Wesslau*, 353 F.2d 238, 241 (CCPA 1965) (“It is impermissible within the framework of section 103 to pick and choose from any one reference only so much of it as will support a given

position, to the exclusion of other parts necessary to the full appreciation of what such reference fairly suggests to one of ordinary skill in the art.”).

Nor has the Examiner provided sufficiently persuasive evidence that the skilled artisan would have operated the structure of Figure 9 under such conditions that would produce the volumetric heat flux as recited in the claims. Wegeng provides no desirable volumetric heat flux nor any dimensions or heat transfer to show that the recited volumetric heat flux is inherent. (*See* FF2-6, 8-13.) While the Examiner discusses that the skilled artisan would “optimize” the conditions of temperature and residence time to maximize yield of a desired product and reduce formation of undesirable products (Ans. 8), additional explanation or evidence must be present to conclude that optimization of the reaction for yield and reduced by-product as described with respect to Figure 9 would necessarily provide the claimed volumetric heat flux. *In re Rouffet*, 149 F.3d 1350, 1358 (Fed. Cir. 1998) (“hindsight” is inferred when the specific understanding or principal within the knowledge of one of ordinary skill in the art leading to the modification of the prior art in order to arrive at appellant's claimed invention has not been explained).

VI. CONCLUSION

On the record before us, we reverse the rejection maintained by the Examiner.

REVERSED

FOR PATENT OWNER:

BATTELLE MEMORIAL INSTITUTE
Attn: IP Legal Services, K1-53
P.O. Box 999
Richland, WA 99352

FOR THIRD-PARTY REQUESTER:

MCDERMOTT WILL & EMERY LLP
600 13th Street N.W.
Washington, DC 20005-3096