UNITED STATES PATENT AND TRADEMARK OFFICE

UNITED STATES DEPARTMENT OF COMMERCE
United States Patent and Trademark Office
Address: COMMISSIONER FOR PATENTS
P.O. Box 1450
Alexandria, Virginia 22313-1450
www.uspto.gov

APPLICATION NO.	FILING DATE	FIRST NAMED INVENTOR	ATTORNEY DOCKET NO.	CONFIRMATION NO.
11/977,505	10/25/2007	Wolfgang Ebert	15778-00013-US	3127

23416 7590 03/04/2013
NOVAK DRUCE CONNOLLY BOVE + QUIGG LLP
P O BOX 2207
WILMINGTON, DE 19899-2207

EXAMINER
LISTVOYB, GREGORY

ART UNIT	PAPER NUMBER
1765	

MAIL DATE	DELIVERY MODE
03/04/2013	PAPER

Please find below and/or attached an Office communication concerning this application or proceeding.

The time period for reply, if any, is set in the attached communication.

UNITED STATES PATENT AND TRADEMARK OFFICE

BEFORE THE PATENT TRIAL AND APPEAL BOARD

Ex parte BAYER MATERIALSCIENCE AG
Inventors: Wolfgang Ebert, Bernhard Nietzwetzki,
Rainer Mellis, Wilfried Haese, Bert Ruytinix,
Alexander Karbach and Alexander Meyer

Appeal 2012-001415
Application 11/977,505
Technology Center 1700

Before FRED E. McKELVEY, GRACE KARAFFA OBERMAN and DONNA M. PRAISS, *Administrative Patent Judges*.

McKELVEY, *Administrative Patent Judge*.

DECISION ON APPEAL

Statement of the case

Bayer MaterialScience AG ("applicant"), the real party in interest (Brief, page 1), seeks review under 35 U.S.C. § 134(a) of a rejection dated 16 July 2010.

The application was filed in the USPTO on 25 October 2007.

The application on appeal claims priority of German patent application 10 2006 051 305.3, filed 31 October 2006.

The application has been published as U.S. Patent Application Publication 2008/0154018 A1.

In support of prior art rejections, the Examiner relies on the following evidence.

Kawasaki et al. "Kawasaki"	Japanese Published Patent Application 2001-310935	11 June 2001
Takayoshi et al. "Takayoshi"[1]	European Patent Specification EP 1 156 071 B1	4 Aug. 2004
Alibaba	Stainless Steel Filter Mesh http://www.alibaba.com/product-gs/237543919/stainless_steel_filter_mesh.html	2005[2]

[1] Takayoshi is the third named inventor, the first being Kimura and the second being Minami. However, both the Examiner and applicant refer to the European document as "Takahoshi." We will refer to the European document as "Takayoshi."

[2] A copy of Alibaba in the record contains an Internet download date of 24 July 2009—which is after applicant's filing date. However, the Examiner indicates that Alibaba was published in 2005. Rejection (16 July 2010), page 2; Answer, page 3. Applicant has not contested the accuracy of the Examiner's 2005 date.

Applicant does not contest the prior art status of the evidence relied upon by the Examiner.

We mention the following additional evidence in this opinion.

Murakami et al. "Murakami"	European Patent Application EP 1 199 325 A1	24 April 2002
Ebert et al. "Ebert"	U.S. Patent Application Publication 2008/0154018 A1	26 June 2008

We have jurisdiction under 35 U.S.C. § 134(a).

Claims on appeal

Claims 1, 4-8 and 10-11 are on appeal. Brief, page 2; Answer, page 2.

Claim 1, which we reproduce from page 7 of the Brief (Claim Appendix), reads [matter in brackets and indentation added; principal limitations in issue in italics]:

> A process for purifying polycarbonate comprising
>
> [1] obtaining molten polycarbonate having a weight average molecular weight of 14,000 to 30,000 g/mol and
>
> [2] *filtering said polycarbonate* through at least one non-woven metal structure *under a pressure of from 5 to 35 bar* to obtain polycarbonate,
>
> wherein said non-woven metal structure has a thickness of from 5 to 0.1 mm,
>
> wherein said structure comprises from 2 to 10 layers including at least one dense layer and at least one less dense layer,

wherein said at least one dense layer is from 0.05 to 0.2 mm thick and has a pore size of from 1 to 10 µm,

wherein the densest layer is located in the middle of said at least one non-woven metal structure, and

wherein the metal of said at least one non-woven metal structure is

[a] thermally pretreated in an oxidative atmosphere and

[b] the metal surface of said at least one non-woven metal structure is conditioned at a temperature in the range of from 200 to 500 º[C] for up to 35 hours.

Independent Claim 11 is similar to Claim 1 and contains a limitation "wherein content of fluorescing particles is lower than that in the molten polycarbonate."

Applicant does not argue the separate patentability of any particular claim. Accordingly, we decide the appeal on the basis of Claim 1. 37 CFR § 41.37(c)(1)(vii). We also mention one feature of Claim 11.

Analysis

Polycarbonates and methods for making polycarbonates are known.

One of applicant's objectives is use of a filtration process that is said to enable separation of "fluorescent particles" from molten polycarbonate. The polycarbonate can be used to make a "substrate material" (e.g., CD or DVD) which is said to have a "low fluorescent particle content." Specification, 3:27-30.

Like applicant, Kawasaki and Takayoshi cited by the Examiner also describe preparation of filtered polycarbonates. In both cases, the object is to remove

foreign matter and provide clear polycarbonates. *See* generally: (1) Kawasaki, Abstract (Problem to be Solved) and ¶ 0004 and (2) Takyoshi ¶ 0006. Unlike applicant, Kawasaki and Takayoshi do not explicitly describe removal of so-called "fluorescent particles."

The sole difference between the subject matter of Claim 1 and Kawasaki argued by applicant in its Brief is the limitation "filtering … under a pressure of from 5 to 35 bar."[3] Brief, page 4.

The Examiner acknowledges the difference. Answer, page 8. The Examiner found that polycarbonate viscosity and filter resistance ultimately dictate filter back pressure. *Id*. The Examiner further found that both Kawasaki and applicant use an extruder operating at the same temperature. Kawasaki, ¶ 0031 (biaxial screw extruder at 300 ºC to 320 ºC); Specification, page 17:22 (extrude) and page 17:30 to page 18:5 (295-315 ºC).[4]

According to applicant, "[t]he Examiner essentially takes the position that . . . [pressure] is inherently disclosed in Kawasaki . . . [and is] necessarily dictated by viscosity . . . (a function of polymer molecular weight and processing temperature) and the filter resistance (which is a function of the diameter of the filter openings)." Brief, page 4. Applicant agrees that viscosity, processing temperature and filter diameter opening "might arguably ultimately dictate the

---

[3] The 5-35 bar pressure limitation initially appeared in original dependent Claim 7. It has now been added to independent Claims 1 and 11. The Examiner's reference in the Answer (page 5) to Claim 7 is to original Claim 7.

[4] The Examiner refers to ¶ 0068 of the Specification. We believe the Examiner is referring to ¶ 0070 of applicant's application as published ("Ebert", cited above).

maximum pressure of the filter of Kawasaki may be operated . . . ." *Id*. However, says applicant, the Kawasaki pressure may be higher than 35 or lower than 5 and therefore inherency has not been established. *Id*.

We believe applicant has misperceived the Examiner's rationale. A pressure is necessary to cause the polycarbonate to pass through a filter. We agree with the Examiner that the determination of a suitable pressure is based, *inter alia*, on polycarbonate viscosity, extruder temperature and characteristics of the filter (both the diameter of the filter and the diameter of the filter pores). Answer, page 5. We find it difficult to believe that one skilled in the art would have been incapable of determining an appropriate pressure to achieve the purity sought by Kawasaki and Takayoshi.[5] Both Kawasaki and Takayoshi, using a suitable albeit undescribed pressure, nevertheless describe passing polycarbonate through a filter. Both Kawasaki and Takyoshi, like applicant, are attempting to remove impurities. Determination of a suitable pressure would therefore be within the skill of the art.

According to applicant, performing the claimed purification process produces an unexpected result. Brief, pages 4-5.

An applicant attempting to establish unexpected results must do so with clear and convincing evidence. *In re Heyna*, 360 F.2d 222, 228 (CCPA 1966) ("It was incumbent upon appellants to submit clear and convincing evidence to support their allegation of unexpected . . . property."). *See also McClain v. Ortmayer*,

---

[5] We note that in its Example 3, Murakami (cited by applicant in the Specification (page 3:17 and page 4:23-28) describes an initial pressure of 38 kgf/cm^2 (col. 18:42) which equals approximately 37.3 bar—slightly higher than applicant's claimed 35 bar.

141 U.S. 419, 429 (1891) (conclusive evidence needed to establish new function). Moreover, a showing of unexpected results must be commensurate scope with a claimed range. *In re Harris*, 409 F.3d 1339, 1344 (Fed. Cir. 2005) ("[T]he record does not show that the improved performance would result if the weight-percentages were varied within the claimed ranges. Even assuming that the results were unexpected, Harris needed to show results covering the scope of the claimed range.").

Applicant bottoms its unexpected result argument on Examples 3 and 4 of the Specification. Brief, pages 4-5.

Any scientific analysis, however, starts with Example 1 (Specification, page 17) describing melting polycarbonate in an extruder at a temperature between 295-305 ºC at the exit and as high as 315 ºC in what is referred to as a Zone 3. According to applicant, the extruded polycarbonate has a fluorescent particle content of 15.2 counts/gram. Specification, page 18:8.

Example 3 is said to be a "comparison example". Specification, page 19:4. A polycarbonate is extruded (apparently using the same extruder at the same temperature as that of Example 1). The filter diameter is said to be 28.4 mm (page 19:15). The diameter of the active filtration area is said to be 19 mm (page 19:21-22). A typical filter element is shown in Fig. 2 of Murakami, reproduced below (the overall filter apparatus being shown in Fig. 1—not reproduced).

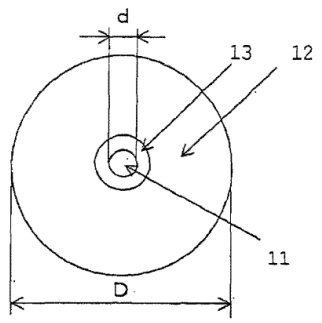

Murakami Fig. 2

Depicted as a schematic diagram showing an example
of a disk type filter element

D = the outer diameter of the filter element and would correspond to applicant's diameter of 28.4 mm. Murakami, col. 17:3.

d = the inner diameter of the filter element. Murakami, col. 17:4.

The active filtration area is calculated on the basis of a diameter = D – d.

D = 28.4 mm and D – d for Example 3 filter is 19 mm. Specification, page 19:16-15, 21-22. The active area is therefore

$$((19/2)^2 \times \pi) = 283.4 \text{ mm}^2.$$

According to applicant, the Example 3 process yields a polycarbonate having 8.7 counts/gram.

Example 4 is similar to Example 3 in many respect but differs at least in that a different size filter is said to have been used. D = 41.2 mm and D - d = 30 mm. Specification, page 20:10-11. The active filtration area is:

$$((30/2)^2 \times \pi) = 706.2 \text{ mm}^2.$$

Example 4, using a larger filter area than the filter of Example 3, reports two fluorescent particle counts of 1.56 counts/gram and 1.18 counts/gram. Specification, page 20:20.

Based on the difference in active filtration area, the Examiner found that increasing the diameter would have been expected to lead to decreasing filter resistance and therefore a decreased pressure requirement. Answer, page 8. As a result, one skilled in the art would not be able to determine whether the pressure or the active filtration area is responsible for applicant's reported lower fluorescent particle counts.

On the record before us, we are unable to find that fluorescent particle count is solely a function of pressure.

We also note that neither Claim1 nor Claim 11 has a fluorescent count limitation. Example 3 vis-à-vis Example 1 indicates that mere filtration can lower the fluorescent count from 15.2 to 8.7 counts/gram. Accordingly, it would seem that the Kawasaki and Tokayoshi filtration processes also lower fluorescent count even if neither mentioned fluorescent count. Hence, and while not argued, the lower fluorescent count limitation of Claim 11 would appear to occur in both Kawasaki and Tokayoshi.

What fluorescent level is "new"? In other words, what level needs to be reached before it can be said that applicant has discovered a new function?

We do not foreclose a possibility on a different record that it might be shown that fluorescent count is a new function and is related solely to pressure. To make that determination, one would have to use the same filter apparatus with the same filter and the same polycarbonate and vary only the pressure. We express no views

on whether other variables determine fluorescent count although we recognize that other variables may play a role.

We also will observe in the event of future prosecution that the data in the Specification based on a pressure of 20-25 bar is not commensurate in scope with the claimed range of 5-30 bar. *In re Harris*, 409 F.3d at 1344.

Other arguments

We have considered applicant's remaining arguments and find none that warrant reversal of the Examiner's rejection. *Cf. In re Antor Media Corp.*, 689 F.3d 1282, 1294 (Fed. Cir. 2012).

Decision

Upon consideration of the appeal, and for the reasons given herein, it is

ORDERED that the decision of the Examiner rejecting the claims on appeal § 103 over the prior art is *affirmed*.

FURTHER ORDERED that no time period for taking any subsequent action in connection with this appeal may be extended under 37 C.F.R. § 1.136(a)(1)(iv).

AFFIRMED

ak