UNITED STATES PATENT AND TRADEMARK OFFICE

**UNITED STATES DEPARTMENT OF COMMERCE**
**United States Patent and Trademark Office**
Address: COMMISSIONER FOR PATENTS
P.O. Box 1450
Alexandria, Virginia 22313-1450
www.uspto.gov

| APPLICATION NO. | FILING DATE | FIRST NAMED INVENTOR | ATTORNEY DOCKET NO. | CONFIRMATION NO. |
|---|---|---|---|---|
| 11/659,900 | 02/09/2007 | Satoshi Seo | 0553-0526 | 5717 |

24628 7590 02/01/2013
Husch Blackwell LLP
Husch Blackwell Sanders LLP Welsh & Katz
120 S RIVERSIDE PLAZA
22ND FLOOR
CHICAGO, IL 60606

| EXAMINER |
|---|
| AHVAZI, BIJAN |

| ART UNIT | PAPER NUMBER |
|---|---|
| 1761 | |

| MAIL DATE | DELIVERY MODE |
|---|---|
| 02/01/2013 | PAPER |

**Please find below and/or attached an Office communication concerning this application or proceeding.**

The time period for reply, if any, is set in the attached communication.

UNITED STATES PATENT AND TRADEMARK OFFICE

---

BEFORE THE PATENT TRIAL AND APPEAL BOARD

---

*Ex parte* SATOSHI SEO, SATOKO SHITAGAKI,
HIROKO ABE, TAKAKO TAKASU and RYOJI NOMURA

---

Appeal 2011-011802
Application 11/659,900
Technology Center 1700

---

*Before* FRED E. McKELVEY, MARK NAGUMO and JAMES C. HOUSEL, *Administrative Patent Judges*.

McKELVEY, *Administrative Patent Judge*.

**DECISION ON APPEAL**

## Statement of the case

Semiconductor Energy Laboratory Co., Ltd. ("applicant"), the real party in interest (Brief, page 4), seeks review under 35 U.S.C. § 134(a) of a final rejection dated 20 August 2010.

The application has been published as U.S. Patent Application Publication 2007/0216292 A1.

In support of prior art rejections, the Examiner relies on the following evidence.

| | | |
|---|---|---|
| Seo et al.<br>"Seo" | U.S. Patent Application Publication 2002/0105005 A1 | 8 Aug. 2002 |
| Kido et al.<br>"Kido 1" | Machine translation of Japanese Patent Application Publication 10-270172 | 9 Oct. 1998 |

Applicant does not contest the prior art status of the evidence relied upon by the Examiner.

Applicant cites and relies on the following evidence.

| | | |
|---|---|---|
| Kido et al.<br>"Kido 2" | *Bright Blue Electroluminescence from Poly(N-vinylcarbazole)*, 63 APPLIED PHYSICS LETTERS 2627 | 1993 |
| Fujii et al.<br>"Fujii" | *Ultraviolet Electroluminescent Diode Utilizing Poly(methylphenylsilane)*, 34 J. APPLIED PHYSICS L 1365 | 1995 |

In view of our disposition of the appeal, we do not find it necessary to discuss Kido 2 or Fujii.

We mention the following additional evidence in this opinion.

| | | |
|---|---|---|
| Kido et al.<br>"Kido 3" | U.S. Patent 6,013,384 | 11 Jan. 2000 |

Kido 3 claims the benefit of Japanese Patent Application 9-012815 (filed 27 January 1997) (an application also listed as a priority document for Kido 1). Kido 3 also claims the benefit of Japanese Patent Application 9-075833. Kido 1 was published as Japanese Patent Application Publication 10-270171. Thus, Kido 3 appears to be the U.S. equivalent to at least part of Kido 1 Japanese Patent Application Publication 10-270172. Since the Kido 1 Japanese Patent Application Publication is based on a "machine translation," which may or may not be accurate, we also refer to Kido 3.

We have jurisdiction under 35 U.S.C. § 134(a).

<u>Claims on appeal</u>

Claims 1, 3-6 and 56 are on appeal. Brief, page 5; Answer, page 2.

Claim 1, which we reproduce from page 11 of the Claim Appendix of the Brief, reads [matter in brackets added; principal limitation in issue in italics]:

> A composite material comprising:
>
> [1] an organic compound with an electron transporting property;
>
> [2] *a binder substance*; and

[3] an inorganic compound showing an electron donating property to the organic compound.

Rejections on appeal

In the Answer, the Examiner maintains two rejections.

Rejection 1: Claims 1, 4-6 and 56 stand rejected under § 102(b) as anticipated by Kido 1. Answer, page 3. As noted earlier, we will also refer to and rely on Kido 3.

Rejection 2: Claim 3 is rejected as being unpatentable under § 103(a) over Kido 1 and Seo. Answer, page 4.

In presenting the appeal with respect to Rejection 1, applicant does not argue the separate patentability of Claims 4-6 and 56. Accordingly, Claims 4-6 and 56 stand or fall with Claim 1. 37 CFR § 41.37(c)(1)(vii).

In presenting the appeal with respect to Rejection 2, no argument is made concerning the patentability of Claim 3. In the Reply Brief, applicant states that Claim 3 is patentable for the same reason that Claim 1 is patentable. Reply Brief, page 3. Accordingly, Claim 3 stands or falls with Claim 1. 37 CFR § 41.37(c)(1)(vii).

Description of the claimed invention

In the Brief, applicant describes the invention by reference to pages 31-33 and ¶¶ [0119] to [0126] of the Specification as filed, which we reproduce below.[1] Brief, pages 5-6.

[1] Paragraphs [0119] to [0126] of the Specification as filed correspond to ¶¶ [0147] to [0154] of the Specification as published in U.S. Patent Application Publication 2007/0216292.

Embodiment Mode 1

[0119] A composite material of the present invention will be described. The composite material is a material including an organic compound and an inorganic compound in combination.

[0120] The conductivity of a composite material of the present invention is [said to be] increased by generating an interaction between an organic compound and an inorganic compound to generate carriers. This embodiment mode [Embodiment Mode 1] describes a case that electrons are generated as carriers.

[0121] A composite material for generating electrons is a composite material including an organic compound and an inorganic compound showing an electron donating property to the organic compound. By adopting this combination, electrons [are said to] move into the organic compound from the inorganic compound, thereby generating electrons as carriers. As a result of the generated electrons, high conductivity can be obtained.

[0122] As an organic compound of the present invention, which is used for a composite material generating electrons, a material that is superior in electron transporting property is preferable. An organic compound having a pyridine skeleton, an imidazole skeleton, a triazole skeleton, an oxadiazole skeleton, an oxazole skeleton, or a thiazole skeleton is preferably used. Specifically, tris(8-quinolinolato) aluminum ($Alq_3$); tris(4-methyl-8-quinolinolato) aluminum ($Almq_3$); bis(10-hydroxybenzo[h]-quinolinato)beryllium ($BeBq_2$);

bis(2-methyl-8-quinolinolato)(4-phenylphenolato)aluminium (BAlq); bis [2-(2'-hydroxyphenyl)-benzoxazolato]zinc ($Zn(BOX)_2$); bis[2-(2'-hydroxyphenyl)-benzothiazolato]zinc ($Zn(BTZ)_2$); bathophenanthroline (BPhen), bathocuproin (BCP), 2-(4-biphenylyl)-5-(4-*tert*-butylphenyl)-1,3,4-oxadiazole (PBD); 1,3-bis[5-(4-*tert*-butylphenyl)-1,3,4-oxadiazol-2-yl]benzene (OXD-7); 2,2',2"-(1,3,5-benzenetriyl)-tris(1-phenyl-1H-benzimidazole) (TPBI); 3-(4-biphenylyl)-4-phenyl-5-(4-*tert*-butylphenyl)-1,2,4-triazole (TAZ); and 3-(4-biphenylyl)-4-(4-ethylphenyl)-5-(4-*tert*-butylphenyl)-1,2,4-triazole (p-EtTAZ); and poly(4-vinyl pyridine) (PVPy) and the like can be given. However, the present invention is not limited to these substances.

[0123] As the inorganic compound included in the composite material generating electrons, an oxide including an alkali metal or an alkaline earth metal is preferably used. Specifically, one or plural of lithium oxide, calcium oxide, and barium oxide is/are preferably used. A composite oxide including a skeleton of such oxides may also be used. The oxide including an alkali metal or an alkaline earth metal may include a hydroxyl group.

[0124] Since the oxide including an alkali metal or an alkaline earth metal is used, electron transfer is conducted between such a metal oxide and a pyridine skeleton or the like, thereby generating electrons as carriers. Since the electrons are generated internally, high conductivity can be obtained in applying an electric field.

> [0125] A composite material of the present invention may take form in a variety of states, such as a state in which the organic compound becomes a matrix and the inorganic compound is dispersed therein, a state in which the inorganic compound becomes a matrix and the organic compound is dispersed therein, or a state in which the organic compound and the inorganic compound are contained in nearly equal amounts and bound to each other. In any state, since electron transfer is conducted between an organic compound and an inorganic compound, superior electron injecting property, electron transporting property and high conductivity can be obtained.
>
> [0126] When a film is formed using a composite material generating electrons, a material functioning as a binder (a binder substance) may be added to improve the film quality. In particular, in the case of using a low molecular weight compound (specifically, a compound having a molecular weight of 500 or less) is used as the organic compound, a binder substance is needed in consideration of film quality. Needless to say, a binder substance may be added when a high molecular weight compound is used as the organic compound. As binder substances, polyvinyl alcohol (PVA), polymethyl-methacrylate (PMMA), polycarbonate (PC), a phenol resin and the like can be given.

According to applicant (Specification, ¶ [0355]):

> [0355] The composite material generating carriers shown in Embodiment Mode 1 … [are said to have] an excellent carrier

injecting property and an excellent carrier transporting property, because electron transfer is conducted between the organic compound and the inorganic compound. Thus, the driving voltage of a light-emitting element can be reduced.

The composite material of Embodiment Mode 1 can be used as a layer in a light-emitting device, such as that shown in Fig. 1 reproduced below.

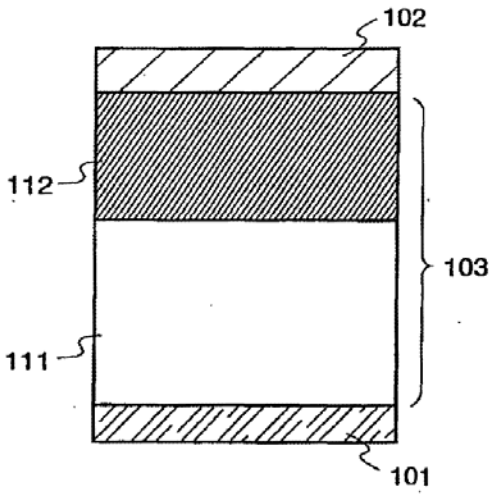


Fig. 1 depicts a simplified cross-sectional view of a light-emitting device

The Specification describes Fig. 1 as follows (¶¶ [0141] to [0142]):

[0141] FIG. 1 shows a light-emitting element of the present invention. A layer including a luminescent substance **103** is sandwiched between a first electrode **101** and a second electrode **102**. The layer including a luminescent substance has a structure in which a first layer **111** and a second layer **112** are stacked. This embodiment mode [Embodiment Mode 4] describes a case that the first electrode

**101** serves as an anode and the second electrode **102** serves as a cathode.

[0142] The second layer **112** is described. The second layer **112** is a layer which transports electrons to the first layer **111**, and is preferably formed with a composite material generating electrons, which is shown in Embodiment Mode 1. The composite material generating electrons contains an organic compound and an inorganic compound showing an electron donating property to the organic compound. Electron transfer occurs between the organic compound and the inorganic compound, thereby generating a large number of electrons as carriers. Thus, excellent electron injecting property and electron transporting property are [said to be] shown. Therefore, driving voltage of a light-emitting element can be decreased by using a composite material generating electrons of the present invention. It should be noted that, since the second layer **112** including such a composite material generating electrons has excellent electron injecting property and electron transporting property, the second layer **112** is preferably formed in a position closer to a cathode than a light-emitting layer.

Examiner's rejection of Claim 1

The Examiner has rejected Claim 1 under § 102(b) stating the following (Answer, pages 3-4) (matter in brackets added; matter in braces added and are Kido 3 citations believed to correspond to the Examiner's Kido 1 citations):

> Kido *et al*. [Kido 1] disclose a composite material comprising [1] an inorganic compound such as $Li_2O$ (Page 9, ¶ 0013, line 7) {col. 4:15} showing an electron donating property to the organic compound such as an oxadiazole skeleton (Page 10, ¶0016, line 15) {col. 5:1; col. 5:22} having an electron transporting property (Page 6, ¶0005, lines 3-4) {col. 3:57-63} with [2] a binder substance (Page 13, ¶0024, line 6) {col. 7:10-19}, wherein the driving voltage is reduced by using a layer formed by co-evaporation of an organic compound and [3] an alkali metal salt or an alkali metal oxide, as an electron injecting layer for a light-emitting device.
>
> The light-emitting device of Kido *et al*. would inherently possess the recited limitation because [the] same ingredients and condition[s] are utilized. Kido *et al*. disclose all the limitations of … [Claim 1]. Therefore … [Claim] 1… [is] anticipated by Kido *et al*.

**Analysis**

Anticipation

Anticipation under § 102 requires that each and every element as set forth in the claim is found, either expressly or inherently described, in a single prior art reference. *In re Robertson*, 169 F.3d 743, 745 (Fed. Cir. 1999). But, disclosure of each element is not quite enough. Anticipation also requires the presence of a

single prior art disclosure of all elements of a claimed invention arranged as in the claim. *Finisar Corp. v. DirecTV Group, Inc.*, 523 F.3d 1323, 1334-35 (Fed. Cir. 2008); *Net MoneyIN, Inc. v. VeriSign, Inc.*, 545 F.3d 1359, 1370 (Fed. Cir. 2008) (clarifying that an anticipation "test is thus more accurately understood to mean 'arranged or combined in the same way as in the claim.'").

Applicant's position

Applicant maintains that the Kido 1 binder identified by the Examiner is part of a "hole injection" layer (*see* Kido 3, Fig. 1), whereas the inorganic compound and organic compound are part of a metal-doped layer. Brief, page 9; Reply Brief, page 2. On that basis, applicant reasons that the claimed composite material is not described by Kido 1.

Discussion

Fig. 1 of Kido 3 (which may be the same as Fig. 1 of Kido 1) is reproduced below.

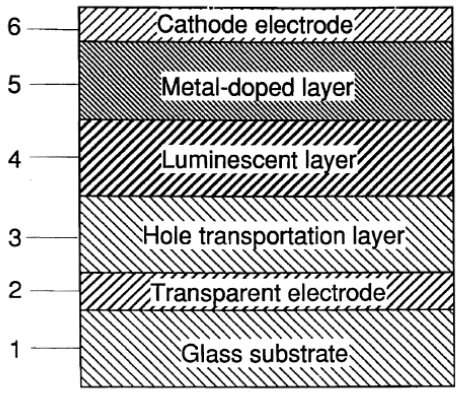


Kido 3 Fig. 1

Kido 3 Fig. 1 depicts a cross-section view of an organic EL device

A review of Kido 3 reveals that the "binder" identified by the Examiner is disclosed as being part of a hole transport layer **3**. Col. 7:10-19. The organic and inorganic compounds identified by the Examiner are part of metal-doping layer **5**.

Kido 1 does not appear to have a detailed discussion identical to that which appears in Example 4 of Kido 3. Kido 3 Example 4 describes the following (col. 11:45-62) [bracketed matter added]:

> The procedure of Example 1 was repeated with the proviso that polyparaphenylene vinylene (PPV) was first deposited onto the ITO-coated [indium tin oxide-coated] glass substrate **1** … to form a luminescent PPV layer **4** having a thickness of about 1,000 Å. Then, polystyrene [a binder] of a molecular weight of 200,000 and diphenylanthracene [an organic compound; *see* col. 4:60] in a weight ratio of 2:1 were dissolved in tetrahydrofuran, and 2% by weight of Li [an inorganic compound; *see* col. 4:15] based on diphenylanthracene was dispersed, with stirring, in the resulting solution to cause a reaction of Li with diphenylanthracene. Using the thus obtained tetrahydrofuran solution, the luminescent PPV layer **4** was spin-coated with diphenylanthracene/Li-containing polystyrene [polystyrene is a well-known binder material] in a nitrogen atmosphere to form a metal-doped layer **5** [a composite material] having a thickness of about 50 Å. Then, aluminum (Al) was deposited at a thickness of about 1,000 Å over the metal-doped layer **5** to form a cathode **6**. The organic EL device [electroluminescent device] was thus obtained.

Based on an analysis of Kido 3, it appears that layer **5** described in Example 4 anticipates the invention of Claim 1 on appeal.

We also note that Kido 1 states:

> The method of forming the above-mentioned metal doping layer **5** may be what kind of thin-film-forming method, for example, vacuum deposition and a sputtering technique can be used for it. By spreading from a solution, when thin film forming is possible, the method of applying from solutions, such as the spin coating method and the dipcoating method, can be used. In this case, *the organic compound and dopant which are doped may be distributed and used into inertness polymer*.

Kido 1, page 10, ¶ 0015 (emphasis added).

Kido ¶ 0015, when taken with Kido 1 ¶¶ 0012-0014, would also appear to be a description adequate for § 102 disclosure of the claimed material.

In the event of further prosecution, we recommend that a non-machine translation of Kido 1 be obtained, including a translation of the information in the Kido 1 drawings.

## Decision

Upon consideration of the appeal, and for the reasons given herein, it is

**ORDERED** that the decision of the Examiner rejecting the claims on appeal is *affirmed*.

**FURTHER ORDERED** that since we have relied on Kido 3 in addition to Kido 1 and our rationale differs from the rationale of the Examiner, our affirmance is designated as a new rejection. 37 CFR § 41.50(b).

**FURTHER ORDERED** that our decision is not a final agency action.

**FURTHER ORDERED** that within **two (2) months** from the date of our decision, appellant may further prosecute the application on appeal by exercising on of the two following options:

Option 1: Request that prosecution be reopened by submitting an amendment or evidence or both. 37 CFR § 41.50(b)(1).

Option 2: Request rehearing on the record presently before the Board. 37 CFR § 41.50(b)(2).

**FURTHER ORDERED** that no time period for taking any subsequent action in connection with this appeal may be extended under 37 CFR § 1.136(a)(1)(iv).

**AFFIRMED**

**New Rejection 37 CFR § 41.50(b)**

bar