UNITED STATES PATENT AND TRADEMARK OFFICE

UNITED STATES DEPARTMENT OF COMMERCE
United States Patent and Trademark Office
Address: COMMISSIONER FOR PATENTS
P.O. Box 1450
Alexandria, Virginia 22313-1450
www.uspto.gov

APPLICATION NO.	FILING DATE	FIRST NAMED INVENTOR	ATTORNEY DOCKET NO.	CONFIRMATION NO.
11/301,404	12/13/2005	Xuejun Fan	US040571	8336

24737 7590 02/21/2013
PHILIPS INTELLECTUAL PROPERTY & STANDARDS
P.O. BOX 3001
BRIARCLIFF MANOR, NY 10510

EXAMINER
DAM, DUSTIN Q

ART UNIT	PAPER NUMBER
1758	

NOTIFICATION DATE	DELIVERY MODE
02/21/2013	ELECTRONIC

Please find below and/or attached an Office communication concerning this application or proceeding.

The time period for reply, if any, is set in the attached communication.

Notice of the Office communication was sent electronically on above-indicated "Notification Date" to the following e-mail address(es):

debbie.henn@philips.com
marianne.fox@philips.com

UNITED STATES PATENT AND TRADEMARK OFFICE

BEFORE THE PATENT TRIAL AND APPEAL BOARD

Ex parte Koninklijke Philips Electronics, N.V
(Inventors: Xuejun Fan, Jeff Lord, and William Keith)

Appeal 2011-007426
Application 11/301,404
Technology Center 1700

Before BRADLEY R. GARRIS, RICHARD E. SCHAFER, and ROMULO H. DELMENDO, *Administrative Patent Judges*.

SCHAFER, *Administrative Patent Judge*.

DECISION ON APPEAL

Koninklijke Philips Electronics (Applicant) appeals an Examiner's decisions rejecting claims 1-21. 35 U.S.C. §§ 6(b) and 134(a). We affirm-in-part and enter a new ground of rejection as to Claim 2.

The Claimed Subject Matter

The invention relates to solar panel power generations systems. The system includes solar panels and a power converter. The converter is located in the frame of the solar cell adjacent to and at a lateral distance from the edge of the panel. The lateral distance provides an air space between the panel and the converter.

Claims 1 and 18 are representative:

> 1. A power system comprising:
> a solar panel comprising
> photoelectric elements that are configured to convert light energy to a first voltage, wherein the solar panel includes
> a front surface configured to be oriented to receive the light energy,
> a rear surface substantially parallel to the front surface, and
> an edge connecting the front surface and the rear surface such that the edge is substantially perpendicular to the front surface;
> a power converter that is configured to convert the first voltage to an output voltage of the power system, and
> an enclosure configured to substantially enclose the power converter, wherein
> the enclosure is configured
> to be mounted adjacent to the edge of the solar panel so as to place the power converter at a lateral distance from the solar panel that provides a substantial air space between the solar panel and the power converter,
> and wherein the enclosure comprises at least one solar-irradiation-resistant surface exposed to the light energy and configured to minimize an amount of the light energy that reaches the power converter.

> 18. An apparatus comprising:
> a power converter, and
> an enclosure configured to enclose the power converter, and to facilitate attachment to an edge of a solar panel,
> wherein the power converter is mounted in the enclosure so that when the enclosure is attached to the edge of the solar panel, an air space is provided between the power converter and the edge of the solar panel, in a direction perpendicular to the edge of the solar panel, and
> the enclosure comprises at least one surface comprising solar-irradiation resistant material configured to be exposed to light energy and to minimize an amount of the light energy that reaches the power converter when the power converter is mounted in the enclosure.

Brief 14, 16 (Claims Appendix).

Rejections

In the Answer the Examiner maintained the following rejections, all under 35 U.S.C. § 103(a):

1. Claims 1-3, 7-18, 20, and 21 over the combined teachings of Toyomura[1] and Uchihashi;[2] and

2. Claims 4-6 and 19 over the combined teachings of Toyomura, Uchihashi; and Aschenbrenner;[3]

Discussion

Claims 1, 3, 7-11, 13-15, and 17

Applicant contends:

> The combination of Toyomura and Uchihashi fails to teach or suggest an enclosure that substantially encloses a

[1] U.S. Patent Publication 2002/0179140 A1.
[2] U.S. Patent 5,951,785.
[3] U.S. Patent 7,297,866 B2.

> power converter and comprises at least one solar-irradiation-resistant surface exposed to the light energy that is provided to the front surface of the solar panel, as specifically claimed in claim 1 . . .
>
> Because the Examiner has failed to identify where the combination of Toyomura and Uchihashi teaches or suggests an enclosure that substantially encloses a power converter and comprises at least one solar-irradiation-resistant surface exposed to the light energy that is provided to the front surface of the solar panel, the applicants respectfully maintain that the Examiner has failed to establish a prima facie case to support the rejection of claim 1.

Brief 6-7.

We disagree. Uchihashi teaches a photovolotaic generator 11 in which a converter (inverter 2) is substantially enclosed by element 10a of frame 10 and fin structure 2a. Uchihashi, Figure 12 and 9:3-6. Both the top of Element 10a and the fin structure 2a are exposed to the light energy that falls on the front surface of the solar panel. Uchihashi, Figures 11 and 12 and 9:14-18. The frame 10a and fin structure 2a may be made of aluminum, which, being opaque and reflective is "solar-irradiation-resistant" and would minimize, if not prevent, the light energy reaching Uchihashi power converter 2. With respect to the solar-irradiation-resistant material, we note that Applicant has not provided any guidance as to, or examples of, suitable irradiation-resistant-materials.

We do not see error in the Examiner's decision rejecting Claim 1. Since Applicant has not directed separate argument as to the subject matter added by dependent Claims 3, 7-11, 13-15, and 17, we affirm the rejection of those claims as well. 37 CFR § 41.37(c)(1)(vii).

Claim 2

Claim 2 depends from Claim 1 and adds that the converter enclosure have a

> depth dimension that is substantially equal to a depth of the edge of the solar panel and configured to provide the power system with a substantially flat upper and lower profile wherein a depth of the power system is substantially equal to the depth of the edge of the solar panel.

Brief, 14 (Claims Appendix). The Examiner finds that Uchihashi Figures 11 and 12 describes this feature. Answer, 6. Applicant argues, that to the contrary Figures 11 and 12 shows that

> Uchihashi's converter 2, which includes fins 2a and cover 2b, extends above the surface of the solar panel. . . . Accordingly, Uchihashi cannot be said to disclose an enclosure that encloses the power converter that has a depth that equals the depth of the solar panel, and cannot be said to provide a substantially flat upper and lower profile.

Brief, 8.

We agree with Applicant. We think one having ordinary skill in the art would consider the fins 2a are part of the converter enclosure. Since the fins extend above the surface of the solar panel, the depth of the enclosure is not equal to the depth of the solar panel. The Examiner has not provided an explanation of why one skilled in the art would eliminate the cooling fins from the enclosure when placing the converter in the frame. The Examiner's decision rejecting Claim 2 is reversed.

Claim 12

Claim 12 is dependent on Claims 1 and 7. It adds that the converter housing "is mounted on a side wall of the enclosure, opposite the edge of the solar panel." Brief 15 (Claims Appendix). Applicant argues:

> The combination of Toyomura and Uchihashi fails to teach or suggest a housing that is mounted on a side wall of the

> enclosure, opposite the edge of the solar panel, as claimed in claim 12.
>
> The Examiner asserts that Toyomura's adhesive and filler 3402 corresponds to a housing mounted on a side wall of the enclosure, opposite the edge of the solar panel. This assertion is incorrect.
>
> * * * * *
>
> As is clearly evident, Toyomura's adhesive and filler 3402, which is within the enclosure on the rear surface 103 is not mounted "opposite the edge of the solar panel", particularly in view of the fact that the applicants clearly define the edge as being substantially perpendicular to the front surface.
>
> Because the combination of Toyomura and Uchihashi fails to teach or suggest a housing that is mounted on a side wall of the enclosure, opposite the edge of the solar panel, the applicants respectfully maintain that the rejection of claim 12 under 35 U.S.C. 103(a) over Toyomura and Uchihashi is unfounded, and should be reversed by the Board.

Brief 9.

The Examiner relied on Uchihashi, for the suggestion of mounting the power converter enclosure opposite the edge of the solar panel. Answer 5. The Examiner specifically references Uchihashi Figure 12 for support. Answer 5. That Figure, reproduced below, reasonably suggests mounting the converter 2 on the side of the enclosure opposite the edge of the solar panel.

Fig.12

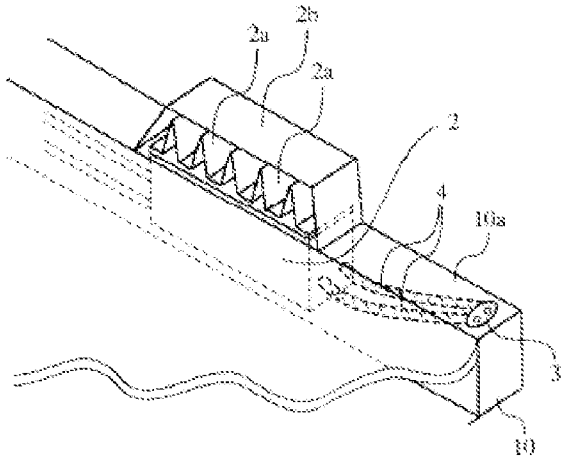

Figure 12 shows the electric converter 2 mounted within frame 10 adjacent a solar panel.

We fail to see any error in the in the rejection of Claim 12.

Claim 16

Claim 16 depends from Claims 1 and 15. Claim 16 additionally requires that the converter enclosure be attached to the solar panel by means of a low thermal conductivity material on the edge of the solar panel. The Examiner relied on Uchihashi for the suggestion of mounting the converter at the side of the solar panel. Answer 5. The Examiner found that Toyomura teaches attaching the converter to the solar panel by means of a low thermal conductivity coupling 205 that minimizes thermal transfer between the converter enclosure and the solar panel. Answer 9. The Examiner specifically referenced Toyomura Figure 5, Element 205 and ¶ 66 for support. Applicant has not challenged that finding. Rather, Applicant argues that Toyomura teaches mounting the converter enclosure to the rear surface of the solar panel rather than on the edge. Brief 10.

Applicant misapprehends the Examiner's rejection. Uchihashi was relied upon for suggesting the location of the converter along a side of the panel rather than on the back. Answer 6. Toyomura was relied upon for the concept of attaching the converter to the solar panel using a low thermal conductivity coupling. Answer 9. We fail to see error in the Examiner's rejection of the subject matter of Claim 16.

Claims 18 and 20-21

Claims 18 and 20-21 are directed to an apparatus that includes a power converter within an enclosure adapted to be attached to the edge of a solar panel so that an air space is provided between the power converter and the edge of the solar

panel in a direction perpendicular to the edge of the solar panel. Applicant argues only that the Examiner did not address this aspect of the invention. Brief 10.

Contrary to Applicant's argument, the Examiner did address the air space limitation. The examiner specifically referenced Toyomura Figure 5 and the space between adhesive filler 3402 that encapsulates the converter components and connector 205 that attached the converter enclosure to the back of the solar panel. Final Rej. 3, Answer 5. In this regard, we also note that an air gap or space separating the power converter and the edge of the solar panel is also shown in Toyomura's Figures 2, 3, 4, 6 and 9 between the substrate 209 supporting the power converter and "first member" 205 that attaches the conversion enclosure to the back of the solar cell. Uchihashi's Figure 12 similarly shows an air space between the edge of the solar panel and the enclosure for converter 2. Thus, both Toyomura and Uchihashi show that the concept of including an air space between the converter and the solar panel was known to those working in the art. The requirement for an air space located between the edge of the solar panel and the power converter and does not present an unobvious distinction. We do not see error in the decision rejecting Claims 18 and 20-21.

Claims 4-6 and 19

Claims 4-6 depend from Claim 1. Claim 19 depends from Claim 18. These claims require that the converter enclosure include ventilation openings to provide a flow of air between the solar panel and the power converter. The Examiner added the Aschenbrenner reference as teaching the use of a ventilated solar cell frame to provide cooling. Answer 10-11. Applicant argues that

> neither Toyomura, Uchihashi, or Aschenbrenner discloses ventilation openings in the enclosure that encloses the power converter. Of particular note, Aschenbrenner does not address a power converter, and does not address an enclosure for such a

power converter.

Brief 11.

We are not convinced that the Examiner erred in rejecting Claims 4-6 and 19. Toyomura and Uchihashi teach that heating of the power converter circuitry is a concern in the operation of solar cells. E.g., Toyomura ¶ 6, Uchihashi 1:60 – 2: 4. Uchihashi teaches placing the converter in the solar cell frame 10a. Uchihashi Figures 11 and 12. Uchihashi also teaches the use of cooling fins 2a and cover 2b to provide adequate cooling when the converter is located in the frame. Uchihashi 9:14-21. Aschenbrenner teaches the inclusion of air vents in the solar cell frame to provide cooling air flow to the solar cell. Aschenbrenner 1:31-38. One having ordinary skill in the art would have recognized that providing air vents in the solar cell frame would provide an alternative means to Uchihashi's fins 2a for cooling the converter circuitry. The use of a vented frame to provide cooling air to the converter located within the frame would have been an obvious.

Claim 6 additionally requires that one or more of the vent openings be adjustable. Adjustable cooling openings, i.e. openings that are closable to limit air flow, are ubiquitous in everyday experience. Ordinary house and automobile windows are examples. The concept of using closable vents to control airflow would have been known to the person of ordinary skill in the art. Configuring the vent openings to be adjustable would have been within the skill of the art and does not provide an unobvious distinction over the use of ventilation openings taught by Aschenbrenner.

We affirm the rejections of Claims 4-6 and 19.

New Ground of Rejection

We enter a new ground of rejection as to the subject matter of Claim 2 over the combined teachings of Toyomura, Uchihashi and Aschenbrenner.

Claim 2 depends from Claim 1 and requires that the converter enclosure have a depth dimension that is substantially the same thickness as the depth to the solar panel resulting in a power system that has a substantially flat upper and lower profile.

We held above that the placement of the converter enclosure in the frame adjacent the edge of the solar panel would have been obvious from the combined teachings of Toyomura and Uchihashi. We also held that following Uchihashi's teachings would not have resulted in a solar panel having a substantially flat upper and lower profile. The need to cool the power converter was recognized by those working in the art. E.g., Toyomura ¶ 6, Uchihashi 1:60 – 2: 4. Uchihashi teaches placing the converter in the solar cell frame 10a. Uchihashi Figures 11 and 12. Uchihashi also teaches the use of cooling fins 2a and cover 2b to provide adequate cooling when the converter is located in the frame. Aschenbrenner teaches the use of air vents in the frame of the solar panel to facilitate cooling. One having ordinary skill in the art would have recognized that Aschenbrenner's vented frame would be useful to provide the necessary cooling to the power converter enclosed in the frame. It would have been obvious to substitute Aschenbrenner's vented frame for Uchihashi's cooling fins to provide cooling to the converter. The substitution would remove the need for the cooling fins resulting in a "power system with a substantially flat upper and lower profile, wherein a depth of the power system is substantially equal to the depth of the edge of the solar panel" as required by Claim 2.

Summary

The rejections of Claims 1, 3, 7-18, 20, and 21 under 35 U.S.C. § 103(a) over the combined teachings of Toyomura and Uchihashi are affirmed.

The rejection of Claims 4-6 and 19 under 35 U.S.C. § 103(a) over the combined teachings of Toyomura, Uchihashi; and Aschenbrenner is affirmed.

The rejection of Claim 2 under 35 U.S.C. § 103(a) over the combined teachings of Toyomura and Uchihashi is reversed.

We have entered a new ground of rejection of the subject matter of Claim 2 under 35 U.S.C. §103(a) over the combined teachings of Toyomura, Uchihashi; and Aschenbrenner. 37 CFR § 41.50(b).

Section 41.50(b) provides that the applicant, WITHIN TWO MONTHS FROM THE DATE OF THE DECISION, must exercise one of the following two options with respect to the new ground of rejection to avoid termination of the appeal as to the newly rejected claims:

(1) *Reopen prosecution*. Submit an appropriate amendment of the claims so rejected or new evidence relating to the claims so rejected, or both, and have the matter reconsidered by the Examiner, in which event the proceeding will be remanded to the Examiner. . . .

(2) *Request rehearing*. Request that the proceeding be reheard under § 41.52 by the Board upon the same record.

No time period for taking any subsequent action in connection with this appeal may be extended under 37 C.F.R. § 1.136.

AFFIRMED-IN-PART
NEW GROUND OF REJECTION
37 C.F.R. § 41.50(b)

kmm