UNITED STATES PATENT AND TRADEMARK OFFICE

UNITED STATES DEPARTMENT OF COMMERCE
United States Patent and Trademark Office
Address: COMMISSIONER FOR PATENTS
P.O. Box 1450
Alexandria, Virginia 22313-1450
www.uspto.gov

APPLICATION NO.	FILING DATE	FIRST NAMED INVENTOR	ATTORNEY DOCKET NO.	CONFIRMATION NO.
11/623,641	01/16/2007	Ferdinand Kiemeneij	1001.1302106	5223

11050 7590 02/26/2013
SEAGER, TUFTE & WICKHEM, LLC
1221 Nicollet Avenue
Suite 800
Minneapolis, MN 55403

EXAMINER
MEHTA, BHISMA

ART UNIT	PAPER NUMBER
3767	

MAIL DATE	DELIVERY MODE
02/26/2013	PAPER

Please find below and/or attached an Office communication concerning this application or proceeding.

The time period for reply, if any, is set in the attached communication.

UNITED STATES PATENT AND TRADEMARK OFFICE

BEFORE THE PATENT TRIAL AND APPEAL BOARD

Ex parte FERDINAND KIEMENEIJ

Appeal 2011-006753
Application 11/623,641
Technology Center 3700

Before TONI R. SCHEINER, DEMETRA J. MILLS, and SHERIDAN K. SNEDDEN, *Administrative Patent Judges*.

SNEDDEN, *Administrative Patent Judge*.

DECISION ON APPEAL

This is an appeal under 35 U.S.C. § 134 involving claims to a preshaped catheter. The Examiner has rejected the claims as anticipated and obvious. We have jurisdiction under 35 U.S.C. § 6(b). We affirm.

STATEMENT OF THE CASE

Appellant's invention "relates to preshaped tubular catheters for percutaneous transradial approach to catheterization" (Specification 1, ll. 14-15). Figure 1 of the Specification is reproduced below.

Fig.1

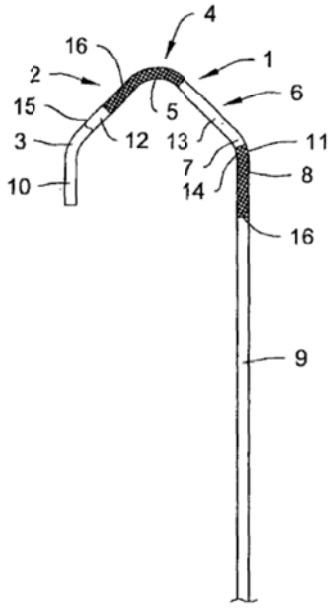

Figure 1 is a side view "of a portion of the catheter according to the invention" (*id.* at 7, ll. 19-20). The catheter shown in Figure 1 "is tubular and comprises a distal bridge shaped portion 1 having a distal arch 2 defining a primary curve 3, a top 4 defining a secondary curve 5, and a proximal arch 6 defining a tertiary curve 7. The proximal arch 6 is connected to a distal end 8 of a straight shaft 9 the proximal end of which is fitted with the usual handling connector (not shown)" (*id.* 7, l. 30 to 8, l. 3). "[T]he tertiary curve 7 rests on the aortic wall; upon pulling the catheter, the secondary curve 5 will deflect the primary curve 3 so that the first straight portion 10 coaxially engages the ostium of the artery" (*id.* 9, ll. 16-18).

The Specification discloses that "the tertiary curve 7 and secondary curve 5 assure a correct directioning of primary curve 3 and first straight portion 10 in coaxial alignment with the artery" (*id.* 10, ll. 2-4). "To achieve engagement into the upward take-off 24' a push on the shaft 9 of the catheter will give an upward deflection of primary curve 3 and the corresponding upward directioning of first straight portion 10 to coaxially engage the artery" (*id.* 10, ll. 4-7). "Engagement into the downward take-off 24" will require a pull on shaft 9 of the catheter so that the primary curve 3 will take a more downward deflection which will re-direct downwardly the first straight portion 10 to properly engage the ostium coaxially" (*id.* 10, ll. 7-9).

Claims 1-20 are on appeal. Claim 1 is representative and reads as follows (emphasis added):

> 1. A preshaped catheter, comprising:
>
> a tubular, generally straight end segment;
>
> a plurality of generally straight segments proximal of the end segment; and
>
> a plurality of curved segments; and
>
> means for permitting the end segment to coaxially intubate a lumen of a left coronary artery having an ostium, whether the left coronary artery has a horizontal takeoff, an upward take-off, or a downward take-off, while a portion of the catheter rests on a portion of a wall of an aorta when the end segment is intubated in the lumen.
>
> 9. The catheter of claim 1, wherein the end segment is more flexible than the plurality of generally straight segments.

The claims stand rejected as follows:

I. Claims 1-8 and 10-20 are rejected under 35 U.S.C. § 102(b) as being anticipated by Danforth.[1]

II. Claim 9 is rejected under 35 U.S.C. § 103(a) as being unpatentable over Danforth in view of Durfee.[2]

The Examiner withdrew, on appeal, the rejection of claims 1-15 under 35 U.S.C. 112, second paragraph (Ans. 3).

I.

Issue

The Examiner has rejected claims 1-8 and 10-20 under 35 U.S.C. § 102(b) as being anticipated by Danforth.

The Examiner finds that the "means of the means-plus-function term is found in the combination of the geometry and modulated flexibility disclosed in the specification" and that Danforth discloses a structure capable of serving this function (Ans. 7-8). Specifically, the Examiner finds "Danforth discloses varying the flexibility of the catheter to allow for easier engagement with the coronary ostium and for stability within the coronary ostium" (Ans. 8).

Appellant contends that "the disclosure of Danforth (Fig. 4) is limited to positioning a catheter near a downward take-off left coronary artery, rather than intubating the lumen of said left coronary artery, which nearby catheter badly misaligns (by about 20 degrees) with the downward take-off

---

[1] Danforth, US 4,822,345, issued Apr. 18, 1989.
[2] Durfee, US 5,203,776, issued Apr. 20, 1993.

left coronary artery" (App. Br. 12). Appellants further contend that "[t]here appears to be no indication that a guiding catheter disclosed by Danforth is capable of coaxially intubating a lumen of a left coronary artery having other than a downward take-off angle" (App. Br.11).

The issue presented is:

Does the evidence of record support the Examiner's findings that Danforth disclose a catheter having a "means for permitting the end segment to coaxially intubate a lumen of a left coronary artery having an ostium, whether the left coronary artery has a horizontal take-off, an upward take-off, or a downward take-off, while a portion of the catheter rests on a portion of a wall of an aorta when the end segment is intubated in the lumen" as required by claim 1?

Findings of Fact

The following findings of fact ("FF") are supported by a preponderance of the evidence of record.

FF1. Figure 1 of Danforth is reproduced below.

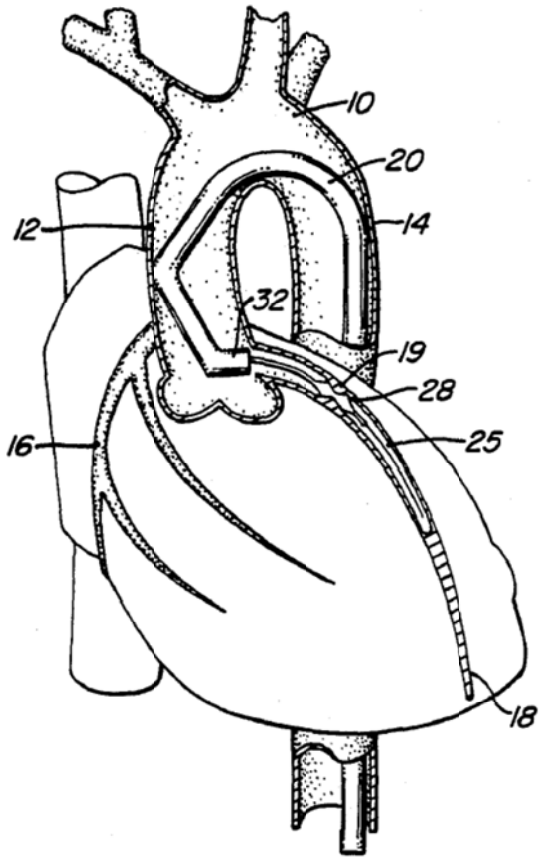

FIG._1.

Figure 4 is a cross-sectional view of the heart and aorta showing a stenosis in a coronary artery together with a conventional guiding catheter and dilation balloon (Danforth col. 3, ll. 41-44).

FF2. Danforth discloses as follows:

> [T]the performance of an angioplasty initially requires the introduction of a guiding catheter within a peripheral artery. By virtue of a guidewire (not shown) and the preshaped nature of guiding catheter **20** at its distal end **32**, the catheter is manipulated up the descending aorta **14** and down the ascending aorta **12** *to place the end **32** of the guiding catheter **20** within the coronary ostium* thus permitting subsequent advancement of the angioplasty guidewire **25** and balloon catheter **28** within the diseased vessel.

(*Id.* col. 4, ll. 31-40.) (Emphasis added.)

FF3. Figure 4 of Danforth is reproduced below.

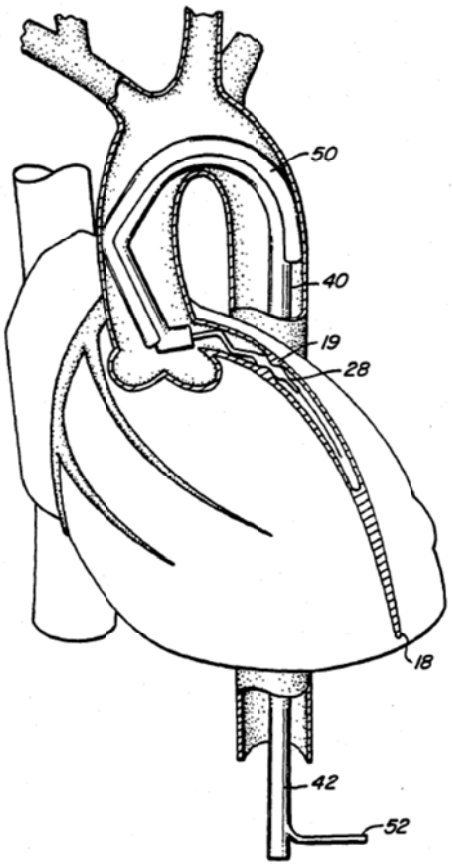

FIG. 4.

Figure 4 is a cross-sectional view of the heart and aorta illustrating one embodiment of the catheter of the present invention (Danforth col. 3, ll. 52-53).

FF4. Danforth discloses that "[t]he use of my guiding catheter with variable flexibility in its most flexible condition at the outset permits easier engagement within the coronary ostium. Once engaged, the relative inflexibility of my catheter enables it to remain engaged within the ostium in a more stable manner than conventional catheters." (*Id.* col. 5, ll. 31-34).

Principles of Law

Anticipation requires that every element and limitation of the claimed invention must be found in a single prior art reference, arranged as in the claim. *Brown v. 3M*, 265 F.3d 1349, 1351 (Fed. Cir. 2001).

Analysis

We find that the evidence of record supports the Examiner's finding that Danforth discloses that the end portion of the guiding catheter is placed within the coronary ostium (FF1 and FF3; Ans. 4).

We also find that the evidence of record supports the Examiner's finding that Danforth discloses a catheter having a "plurality of generally straight segments and the plurality of curved segments [that] are considered to be capable of permitting the end segment to coaxially intubate a lumen of a right coronary artery as claimed" (FF1- FF4; Ans. 4). Appellant presents no evidence to specifically rebut the Examiner's findings that the end-segment of the Danforth catheter is capable of coaxial intubation once within the ostium of the coronary artery. For example, Appellant has not provided any objective evidence, such as expert testimony, to explain how the end segment, once intubated, could engage the coronary artery in a manner that would not be consider "coaxially".

Furthermore, we are not persuaded by Appellant arguments that "Danforth (Fig. 4) is limited to positioning a catheter near a downward take-off left coronary artery" (App. Br. 12). Appellant contends that in "the illustrated deployments found in Danforth (Figs. 1, 2, and 4), both the prior art and stiffenable left Judkins catheters interact only with left coronary arteries which appear to have the same downward takeoff angle of about 10

degrees below the horizontal or about 120 degrees from the adjacent wall of the aorta" (App. Br. 11). However, this argument is insufficient because it is not supported by evidence, but rather mere argument, that, for example, left Judkins catheters are incapable of being manipulated in the manner now claimed (*see*, *id.*). Appellant's arguments supporting such positions, however, cannot take the place of evidence, *In re Pearson*, 494 F.2d 1399, 1405 (CCPA 1974), and are entitled to little, if any, weight. *See, e.g.*, *In re Payne*, 606 F.2d 303, 315 (CCPA 1979); *In re Lindner*, 457 F.2d 506, 508 (CCPA 1972). We thus find this argument insufficient to overcome the Examiner's findings that the Danforth catheter possesses the same or substantially the same geometry and flexibility of the claimed catheter that renders the catheter capable of the same or substantially the same function – that is, intubation in a horizontal take-off, an upward take-off, or a downward take-off (*see e.g.*, App. Br. 7-8).[3]

Conclusion of Law

The preponderance of evidence on this record supports the Examiner's findings that Danforth renders claim 1 obvious. Claims 2-8 and 10-20 fall with claim 1. 37 C.F.R. § 41.37(c)(1)(vii).

[3] Here we note that the flexible curved segments of the Danforth catheter are stiffened only after the catheter is fully engaged (FF4) and thus, we do not find that the stiffening function would not interfere with the intubation function.

II.

Regarding the rejection of dependent claim 9 as obvious over Danforth and Durfee, Appellant argues that this claim is patentable without providing additional argument or evidence (App. Br. 12). Thus, for the same reasons discussed in the section above, Appellant arguments do not persuade us that the Examiner has erred in concluding that claim 1 is obvious over Danforth and Durfee.

SUMMARY

We affirm all rejections on appeal.

AFFIRMED

lp