UNITED STATES PATENT AND TRADEMARK OFFICE

UNITED STATES DEPARTMENT OF COMMERCE
United States Patent and Trademark Office
Address: COMMISSIONER FOR PATENTS
P.O. Box 1450
Alexandria, Virginia 22313-1450
www.uspto.gov

APPLICATION NO.	FILING DATE	FIRST NAMED INVENTOR	ATTORNEY DOCKET NO.	CONFIRMATION NO.
11/473,285	06/22/2006	Joel Colburn	TYHC:0180/FLE/H-NE-00141	6600

52144 7590 03/13/2013
Covidien LP
ATTN: IP Legal
6135 Gunbarrel Avenue
Boulder, CO 80301

EXAMINER
SKORUPA, VALERIE LYNN

ART UNIT	PAPER NUMBER
3771	

NOTIFICATION DATE	DELIVERY MODE
03/13/2013	ELECTRONIC

Please find below and/or attached an Office communication concerning this application or proceeding.

The time period for reply, if any, is set in the attached communication.

Notice of the Office communication was sent electronically on above-indicated "Notification Date" to the following e-mail address(es):

ip.legal@covidien.com

UNITED STATES PATENT AND TRADEMARK OFFICE

BEFORE THE PATENT TRIAL AND APPEAL BOARD

Ex parte JOEL COLBURN and ROGER CALUYA

Appeal 2011-006663
Application 11/473,285
Technology Center 3700

Before DONALD E. ADAMS, ERICA A. FRANKLIN, and SHERIDAN K. SNEDDEN, *Administrative Patent Judges*.

SNEDDEN, *Administrative Patent Judge*.

DECISION ON APPEAL

This is an appeal under 35 U.S.C. § 134 involving claims to a method of manufacturing an inflatable cuff. The Examiner has rejected the claims as anticipated and obvious. We have jurisdiction under 35 U.S.C. § 6(b). We affirm.

STATEMENT OF THE CASE

Appellants' invention relates to

> method of manufacturing an inflatable cuff is provided. The method includes the acts of stretching a tube, creating a positive pressure within the tube, changing the amount the tube is stretched, heating the tube, and increasing the positive pressure within the tube such that a portion of the tube in blown outward to form a cuff.

(Specification, Abstract.) Figures 3A – 3D of the Specification are reproduced below.

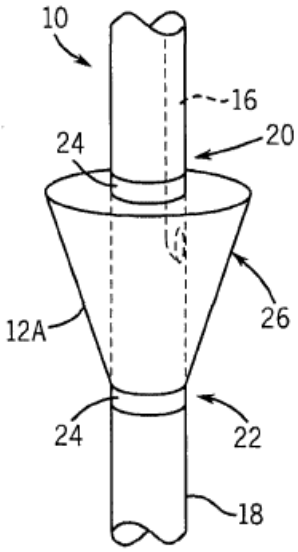

FIG. 3A

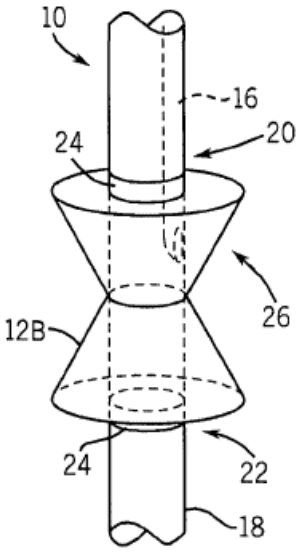

FIG. 3B

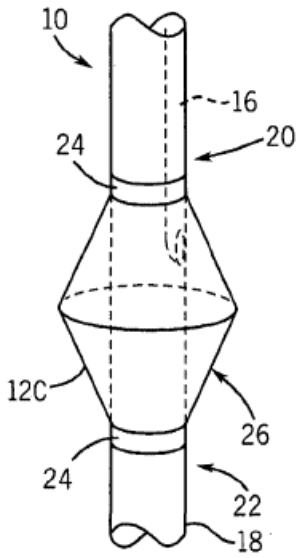

FIG. 3C

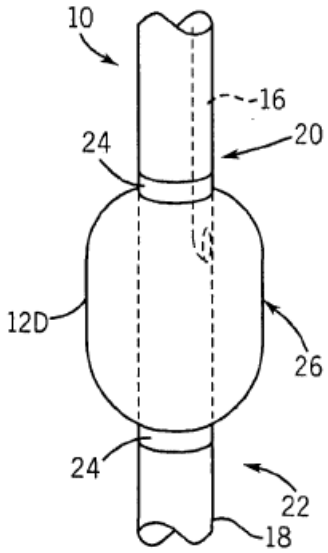

FIG. 3D

"Fig. 3A depicts an exemplary cuff 12A having an inverted cone shape when inflated" (*id.* at 11). "Fig. 3B depicts an exemplary cuff 12B having a generally hourglass shape, i.e., two cones generally connected at their apexes, when inflated" (*id.*). "Fig. 3C depicts an exemplary cuff 12C wider at the middle than at the proximate and distal ends 20 and 22, but with generally straight walls connecting the middle and ends, i.e., two cones generally connected at their bases" (*id.* at 11-12). "Fig. 3D depicts an exemplary cuff 12D wider at the middle than at the proximate and distal ends 20 and 22, but with generally straight or slightly curved walls throughout the middle of the cuff body 26" (*id.* at 12).

Claims 1-10, 12-14, 21-28, and 30-36 are on appeal. Claims 1 and 21 are representative of the appealed subject matter and reads as follows (emphasis added):

> 1. A method of manufacturing an inflatable cuff, comprising:
>
> pre-heating a tube to a first temperature;

stretching the tube;

creating a positive pressure within the tube such that a portion of the tube is blown outward against an inner surface of a mold to form a generally conical cuff; and

heating the generally conical cuff to a second temperature that is greater than the first temperature.

21. A method of manufacturing an inflatable cuff, comprising:

stretching a tube comprising a composition;

creating a positive pressure within the tube such that a portion of the tube is blown outward against an inner surface of a mold to form a cuff comprising the composition; and

heating the cuff;

wherein the tensile strength of the composition is greater in the cuff than in the tube.

The claims stand rejected as follows:

I. Claims 1, 3, 4, 6, 7, 13, 14, 21, 22, 24, 25, 31, 32, 34, and 35 under 35 U.S.C. § 102(b) as being anticipated by Wang et al. (WO 95/22367 A1, published Aug. 24, 1995).

II. Claims 2, 9, 27 and 33 under 35 U.S.C. § 103(a) as being unpatentable over the combination of Wang and Wallace (US 4,130,617, issued Dec. 19, 1978).

III. Claims 5 and 23 under 35 U.S.C. § 103(a) as being unpatentable over Wang.

IV. Claims 8 and 26 under 35 U.S.C. § 103(a) as being unpatentable over the combination of Wang and Wilkins (US 2002/0150707 A1, published Oct. 17, 2002).

V. Claims 10, 28, and 36 under 35 U.S.C. § 103(a) as being unpatentable over the combination of Wang and Pagan (EP 1 005 877 A2, published Jun. 7, 2000).

VI. Claims 12 and 30 under 35 U.S.C. § 103(a) as being unpatentable over the combination of Wang and Schjeldahl et al. (US 4,456,000, issued Jun. 26, 1984).

The same issue is dispositive for each of the rejections.

Issue

The Examiner finds that

> Wang discloses a method of manufacturing an inflatable cuff 14 ("balloon", Fig. 1), comprising: pre-heating a tube 12/13 (Fig. 2a-c) to a first temperature ("90°C", pg. 7, ln. 15-26); stretching the tube 12/13 (pg. 7, ln. 15-26); creating a positive pressure within the tube 12/13 such that a portion of the tube is blown outward against an inner surface of a mold 28 to form a generally conical cuff (pg. 8, ln. 9-30); and heating the generally conical cuff to a second temperature ("95°C") that is greater than the first temperature (pg. 9, ln. 27-33).

(Ans. 4.) Regarding claim 1, the Examiner finds that Wang discloses "applying heat and also applying internal pressure to the balloon to blow the cuff" (*id.* at 10). The Examiner also finds that "Fig. 1 of Wang clearly shows that the two waist portions of the cuff 14 are tapered toward the ends of the cuff in resemblance to a cone" and "that this shape can be characterized as being 'generally conical'" (*id.* at 11).

Regarding claim 21, the Examiner finds that "it is inherent that the process disclosed by Wang would cause the tensile strength in the balloon cuff to be greater than the tensile strength in the rest of the tube" (*id.* at 5).

Here, "Kinslow is relied upon as supporting evidence that an increase in tensile strength occurs in the blow molding process with many polymers" (*id.* at 11).

The issue presented is:

Does the evidence of record support the Examiner's findings that Wang teaches an inflatable cuff having each element of claims 1 and 21?

Findings of Fact

The following findings of fact ("FF") are supported by a preponderance of the evidence of record.

FF1. Figure 1 of Wang is reproduced below.

Fig. 1

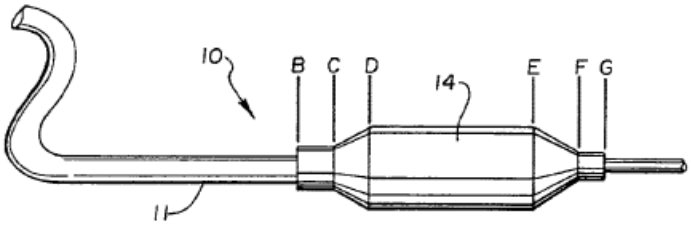

"Fig 1 is a perspective view of an angioplasty catheter having a balloon of the invention mounted thereon" (Wang 4, ll. 6-7).

> The cone regions of the balloon (C)(D)(E)(F) and waist regions of the balloon (B)(C)(F)(G) are formed having a reduced thickness because the axial tension and blowing pressure is selectively varied as a mold (28) containing the balloon (14), and is gradually dipped into a heating medium (70) so as to sequentially blow a first waist (B)(C), a body (D)(E) and a second waist (F)(G).

(*id.* at Abstract).

FF2. Wang discloses as follows:

> Once the prestretch is complete, the stretched tubing 13 is radially expanded into the form of a balloon 14, using a molding process. The molding process comprises placing the stretched tubing 13 in a mold, heating the mold and expanding the stretched tubing radially by means of internal pressure. After sufficient time has passed for the balloon to form, the mold is cooled and the balloon 14 is removed.

(*Id.* at 5.)

FF3. Wang discloses as follows:

> After cooling, the stretched tubing 13 is removed from the water bath and expanded radially using internal pressure. The dimensions to which it is stretched are preferably controlled by performing the radial stretching while the tubing 13 is in a mold having the shape of the desired balloon. ... Heating the stretched tubing 13 while radially expanding it may best be accomplished by dipping the mold 28 into hot water while internal pressure is applied.

(*Id.* at 8.)

FF4. Kinslow discloses as follows:

> It is a well-known fact that many polymers which are particularly suitable for blow molding such as the olefin polymers, undergo the phenomenon known as orientation when stretched in the solid state at a temperature below the crystalline melt point. Since this orientation can result in as much as a 20-fold increase in tensile strength, it was only natural that attempts should be made to utilize this phenomenon in the production of blow molded hollow articles such as bottles.

(Kinslow, col. 1, ll. 21-28.)

FF5. Kinslow discloses that olefins include "ethylene, propylene, butane and mixtures thereof, more particularly *polypropylene*" (Kinslow, col. 2, ll. 46-49) (emphasis added).

FF6. Wang discloses that "[i]t is possible to make balloons from a variety of materials that are generally of the thermoplastic polymeric type. Such materials may include: ... *polypropylene*" (Wang 2, ll. 1-8) (emphasis added).

Principles of Law

"[U]nless a reference discloses within the four corners of the document not only all of the limitations claimed but also all of the limitations arranged or combined in the same way as recited in the claim, it cannot be said to prove prior invention of the thing claimed and, thus, cannot anticipate under 35 U.S.C. § 102. " *Net MoneyIN, Inc. v. VeriSign, Inc.*, 545 F.3d 1359, 1371 (Fed. Cir. 2008).

The Examiner has the burden of providing reasonable proof that a claim limitation is an inherent characteristic of the prior art. *In re Best*, 562 F.2d 1252, 1254–55 (CCPA 1977) ("Whether the rejection is based on 'inherency' under 35 U.S.C. § 102, on 'prima facie obviousness' under 35 U.S.C. § 103, jointly or alternatively, the burden of proof is the same, and its fairness is evidenced by the PTO's inability to manufacture products or to obtain and compare prior art products."); *see also Crown Operations Int'l, Ltd. v. Solutia Inc.*, 289 F.3d 1367, 1377 (Fed. Cir. 2002). The Examiner meets this "burden of production by 'adequately explaining the shortcomings it perceives so that the applicant is properly notified and able to respond.'" *In re Jung*, 637 F.3d 1356, 1362 (Fed. Cir. 2011) (quoting *Hyatt v. Dudas*, 492 F.3d 1365, 1370 (Fed. Cir. 2007)). The burden of proof then shifts to the applicant "to prove that the subject matter shown to be in the prior art does not possess the characteristic relied on." *Best*, 562 F.2d at

1255 ("Where … the claimed and prior art products are identical or substantially identical, … the PTO can require an applicant to prove that the prior art products do not necessarily or inherently possess the characteristics of his claimed product."); *In re Spada*, 911 F.2d 705, 708 (Fed. Cir. 1990) ("[W]hen the PTO shows sound basis for believing that the products of the applicant and the prior art are the same, the applicant has the burden of showing that they are not.").

Analysis

Appellants contend that Wang fails to disclose formation of a generally conical cuff, but rather discloses a conventional barrel-shaped angioplasty balloon. We are not persuaded. Because the Specification does not define the terms "generally conical," we interpret the phrase according to the ordinary meaning of the terms as they would be interpreted by the ordinary artisan. Figures 3A, 3B and 3C of the Specification show various conical forms that may form the design of the cuff. We find the cuff of Wang to comprise two conical portions that can reasonably be described as having a generally conical shape (FF1), especially when compared to Figures 3B and 3C of the Specification. That is, we do not find the use of the terms "generally conical" to distinguish from the shape used by Wang.

Appellants further contend that Wang fails to disclose "'<u>creating a positive pressure within [a] tube such that a portion of the tube is blown outward</u> against an inner surface of a mold to form a generally conical cuff'" as required by independent claims 1 and 21 (App. Br. 10). Rather, Wang

discloses "that a balloon is formed not when positive pressure is generated, as presently recited, but when the tubing is heated" (*id.* at 11). That is,

> [i]f applied internal pressure were the cause of the balloon walls being blown outward, the balloon of the Wang reference would be formed in its entirety upon the initial application of the higher pressure when the first waist was formed, and thus could not have different portions that were separately and sequentially formed

(Reply Br. 3-4).

We are not persuaded. As explained by the Examiner, heat and pressure are applied simultaneously during the molding process to form the waist and cone portions of the balloon disclosed in Wang (FF1 – FF3; *see also,* Ans. 10). The language of the claims does not distinguish from a method where a balloon is sequentially formed and a method where the balloon is formed entirely with an initial application of pressure. Claim 1 merely requires that a portion of the tube is blown outward against an inner surface of a mold. We agree with the Examiner that this feature is disclosed by Wang (*id.*).

Finally, we are also not persuaded by Appellants' arguments that, Wang does not disclose that the tensile strength of the composition is greater in the cuff than in the tube after the act of stretching or heating, as required by claim 21 (*see, e.g.*, App. Br. 19-20). Here, the Examiner relies on Kinslow (Ans. 11), which discloses that the blow molding process naturally increases the tensile strength of olefin polymers (FF4) such as polypropylene (FF5), and the balloons in Wang may be made from polypropylene (FF6).

We find that the Examiner presented a sound rationale for believing that the cuff formed by the process of Wang would inherently have a higher tensile strength than the original tube material (Ans. 11; *see also* Final Office Action 9). Having done so, Appellants have the burden of showing that they are not. *Best*, 562 F.2d at 1254–55.

Appellants have not met this burden. Appellants merely argue that

> [t]he fact that the feature <u>may</u> be present (i.e., "many polymers ... undergo the phenomenon known as orientation") is insufficient. *Id.* Further, the Examiner has failed to provide any basis in fact or technical reasoning to demonstrate that blow molding <u>always and without exception</u>, i.e., necessarily, increases the strength of the molded material, even when different pressure and/or temperature ranges are employed.

(App. Br. 20.) This is insufficient because the argument does not address the use of olefin polymers such as polypropylene as described by Wang. Appellants have not demonstrated that Wang's use of polypropylene would not produce a cuff made from a tube comprising a composition wherein the tensile strength of the composition is greater in the cuff than in the tube as required by claim 21.

Conclusion of Law

The preponderance of evidence on this record supports the Examiner's findings that Wang anticipates claims 1 and 21. Claims 3, 4, 6, 7, 13, 14, 22, 24, 25, 31, 32, 34, and 35 fall with claims 1 and 21. 37 C.F.R. § 41.37(c)(1)(vii).

Regarding the obviousness rejections of dependent claims 2, 5, 8, 9, 10, 12, 23, 26, 27, 28, 30, 33 and 36, Appellants argue that "the references cited by the Examiner in combination with the Wang reference do not

appear to obviate the deficiencies of the Wang reference noted with respect to the respective independent claims" without providing additional argument or evidence (App. Br. 21). "It is well settled that 'anticipation is the epitome of obviousness.'" *In re McDaniel*, 293 F.3d 1379, 1385 (Fed. Cir. 2002) (quoting *In re Fracalossi*, 681 F.2d 792, 794 (CCPA 1982). Thus, for the same reasons discussed above, we affirm each of the obviousness rejections.

SUMMARY

We affirm all rejections on appeal.

AFFIRMED

cdc