UNITED STATES PATENT AND TRADEMARK OFFICE

UNITED STATES DEPARTMENT OF COMMERCE
United States Patent and Trademark Office
Address: COMMISSIONER FOR PATENTS
P.O. Box 1450
Alexandria, Virginia 22313-1450
www.uspto.gov

APPLICATION NO.	FILING DATE	FIRST NAMED INVENTOR	ATTORNEY DOCKET NO.	CONFIRMATION NO.
12/167,791	07/03/2008	Florian N. Ludwig	ACSBL 79579 (9348USO1)	6154

68919 7590 02/19/2013
FULWIDER PATTON, LLP (ABBOTT)
John S. Nagy, Esq.
6060 CENTER DRIVE
10TH FLOOR
LOS ANGELES, CA 90045

EXAMINER
BOSQUES, EDELMIRA

ART UNIT	PAPER NUMBER
3767	

MAIL DATE	DELIVERY MODE
02/19/2013	PAPER

Please find below and/or attached an Office communication concerning this application or proceeding.

The time period for reply, if any, is set in the attached communication.

UNITED STATES PATENT AND TRADEMARK OFFICE

BEFORE THE PATENT TRIAL AND APPEAL BOARD

Ex parte FLORIAN N. LUDWIG
and SHUBHAYU BASU

Appeal 2011-004847
Application 12/167,791
Technology Center 3700

Before ERIC GRIMES, LORA M. GREEN, and STEPHEN WALSH, *Administrative Patent Judges*.

GRIMES, *Administrative Patent Judge*.

DECISION ON APPEAL

This is an appeal under 35 U.S.C. § 134 involving claims to a needle catheter. The Examiner has rejected the claims as obvious. We have jurisdiction under 35 U.S.C. § 6(b). We reverse.

STATEMENT OF THE CASE

The Specification discloses that "[i]n the treatment of heart disease, … agent delivery catheters, typically having deflectable distal sections, are configured for advancing in the patient's vasculature and into the heart

chamber, and an agent [is] delivered directly into the heart wall by jetting or needle-injecting it from the distal tip of the catheter" (Spec. 1, ¶ 0003). "However, the beating heart can make it difficult to accurately place and maintain the operative distal end of the device at the desired treatment site" (*id.*).

The Specification discloses a needle catheter that "directs a needle from the distal tip of the catheter into the wall of the body cavity at an angle relative to the axis of the shaft" (*id.* at 1, ¶ 0004). The Specification discloses that the "resulting angled injection pathway improves the retention of the agent in the body cavity wall, while keeping a distal section of the catheter substantially perpendicular to the body cavity wall for optimal push against the tissue at the injection site" (*id.*).

Claims 1-7 and 9-11 are on appeal. Claim 1, the only independent claim, reads as follows:

1. An agent delivery needle catheter configured for injecting an agent at an injection site in a wall of a patient's body cavity, comprising:

a) an elongated catheter shaft having a proximal end, a distal end, and a needle-through lumen therein extending from the proximal end to a needle-through port in a distal end face of the catheter, and the distal end face is at least in part substantially perpendicular to a longitudinal axis of a distal section of the shaft such that the distal end face and needle-through lumen port therein are configured to be pushed against the wall of the patient's body cavity, and the needle-through lumen has an angled distal portion which extends to the needle-through port at an angle greater than 0 degrees and less than 90 degrees relative to the longitudinal axis; and

b) a hollow needle slidably disposed in the needle-through lumen of the shaft, having a piercing distal tip and a lumen in fluid communication with a port in the piercing distal tip, and having a retracted configuration in which the piercing distal tip of the needle is in the needle-through lumen of the shaft, and an extended configuration in which the piercing distal tip extends distally out the needle-through port, such that the catheter is

configured to form an angled injection pathway in the wall of the patient's body cavity by directing the needle into the wall of the patient's body cavity at the angle of the angled distal portion of the needle-through lumen with the distal end face against the wall of the patient's body cavity at the injection site.

The Examiner has rejected all of the claims on appeal under 35 U.S.C. § 103(a) as obvious in view of Chow.[1] The Examiner finds that Chow's Figure 2 shows a catheter assembly that meets all of the limitations of claim 1 except for a needle-through lumen with "an angled distal portion which extends to the needle-through port at an angle greater than 0 degrees and less than 90 degrees relative to the longitudinal axis" (Answer 5, emphasis omitted). The Examiner finds that Chow's Figure 34 shows an embodiment with "a curved lumen … with an angled distal portion which extends to the needle-through port … at an angle greater than 0 degrees and less than 90 degrees … relative to the longitudinal axis" (*id.*, emphasis omitted). The Examiner concludes that it "would have been obvious to one of ordinary skill in the art … to include a curved (or angled) needle t[h]rough lumen as shown in Fig. 34 … into the embodiment of Figure 2 in order to have accuracy at the injection site and to facilitate the needle penetration at a target site" (*id.*).

Appellants argue that "[a]bsolutely no reason or teaching is given in the reference as to why elements of these two embodiments can or should be rearranged or combined" (Appeal Br. 5).

We agree with Appellants that the Examiner has not adequately explained how Chow would have made obvious the disputed limitation.

---

[1] Chow et al., US 2005/0070844 A1, published Mar. 31, 2005.

Chow discloses a needle injection catheter assembly (Chow 4, ¶ 0067). Chow's Figure 2 is shown below:

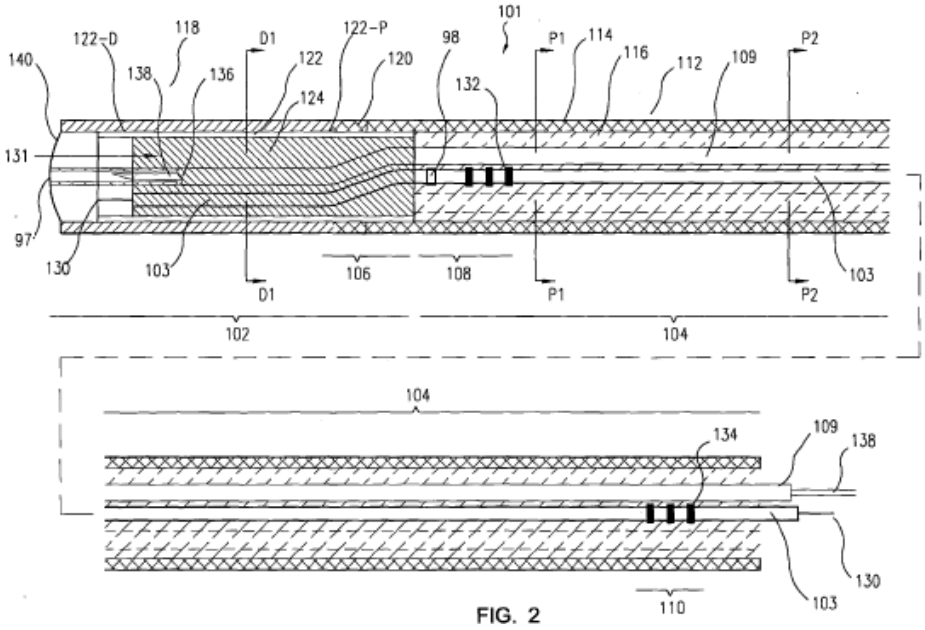

FIG. 2

Figure 2 shows "a side view of the catheter shaft **101** of the catheter assembly **100**. The catheter shaft **101** includes … a needle assembly **109**, which includes a needle **138**" (*id.* at 4, ¶ 0071). Chow discloses that the "distal end of the catheter shaft **101** includes an exit opening **97** to allow the needle assembly **109** to exit the catheter shaft **101** and reach a target site" (*id.* at 8, ¶ 0110). Figure 2 shows that opening 97 is connected to a lumen that is parallel to the longitudinal axis of catheter shaft 101.

Chow's Figure 34 is shown below:

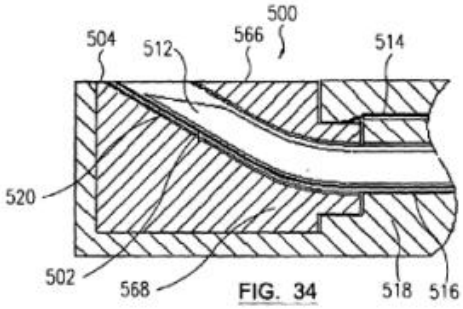

FIG. 34

Figure 34 shows the distal end of a different embodiment of Chow's needle catheter system, which includes an electrode 504 (Chow 3, ¶ 0052). Chow discloses that, in some applications, "target locations are within a tight spacing such that there is not enough room for the catheter to stand perpendicular to the wall" (*id.* at 19, ¶ 0201). Chow discloses that in these locations, the "spacing is so tight that the catheter has to lay side ways [sic]. Extending the needle **512** from the tip of the catheter assembly **500** will not get to the target" (*id.*). Chow discloses that, in Figure 34, "the needle **512** exits the tip electrode **504** on the side of the catheter shaft of the catheter assembly **500**" (*id.*).

Thus, Chow discloses an angled needle-through lumen that directs the needle to exit through the side of the catheter, and is used when the target location does not allow the catheter to stand perpendicular to the target. In the embodiment of Figure 2, where the needle exits the catheter through the distal end face, Chow does not disclose any need or purpose for an angled needle-through lumen. The Examiner has not pointed to anything in Chow, or within the knowledge of those of ordinary skill in the art, that would lead a skilled worker to expect that combining the elements of the embodiments shown in Chow's Figures 2 and 34 in the manner recited in claim 1 would provide "accuracy at the injection site" or "facilitate the needle penetration at a target site" (Answer 5), as stated by the Examiner.

Thus, we reverse the obviousness rejection of claim 1 and dependent claims 2-7 and 9-11.

<u>REVERSED</u>

cdc