UNITED STATES PATENT AND TRADEMARK OFFICE

UNITED STATES DEPARTMENT OF COMMERCE
United States Patent and Trademark Office
Address: COMMISSIONER FOR PATENTS
P.O. Box 1450
Alexandria, Virginia 22313-1450
www.uspto.gov

APPLICATION NO.	FILING DATE	FIRST NAMED INVENTOR	ATTORNEY DOCKET NO.	CONFIRMATION NO.
11/276,023	02/10/2006	Joseph Berglund	PA22409	2506

28390 7590 02/20/2013
MEDTRONIC VASCULAR, INC.
IP LEGAL DEPARTMENT
3576 UNOCAL PLACE
SANTA ROSA, CA 95403

EXAMINER
CARPENTER, WILLIAM R

ART UNIT	PAPER NUMBER
3767	

NOTIFICATION DATE	DELIVERY MODE
02/20/2013	ELECTRONIC

Please find below and/or attached an Office communication concerning this application or proceeding.

The time period for reply, if any, is set in the attached communication.

Notice of the Office communication was sent electronically on above-indicated "Notification Date" to the following e-mail address(es):

rs.vasciplegal@medtronic.com
medtronic_cv_docketing@cardinal-ip.com

UNITED STATES PATENT AND TRADEMARK OFFICE

BEFORE THE PATENT TRIAL AND APPEAL BOARD

Ex parte JOSEPH BERGLUND

Appeal 2011-004225
Application 11/276,023
Technology Center 3700

Before TONI R. SCHEINER, STEPHEN WALSH, and
ERICA A. FRANKLIN, *Administrative Patent Judges*.

WALSH, *Administrative Patent Judge*.

DECISION ON APPEAL

This is an appeal under 35 U.S.C. § 134(a) from the rejection of claims directed to a system for treating a vascular condition. The Patent Examiner rejected the claims for obviousness. We have jurisdiction under 35 U.S.C. § 6(b). We affirm.

STATEMENT OF THE CASE

Claims 1-9 and 18-28 are on appeal. Claim 1 illustrates the subject matter on appeal and reads as follows:

1. A system for treating a vascular condition, the system comprising:
a catheter;
an inflatable member operably attached to the catheter; and
a plurality of detachable microdarts connected to at least a portion of the inflatable member, wherein the plurality of microdarts fold into the inflatable member in a delivery configuration, wherein the plurality of microdarts are covered by the inflatable member during delivery and exposed during inflation of the inflatable member in an insertion configuration and wherein the detachable microdarts are configured to detach from the inflatable member upon insertion into a target region.

The Examiner rejected the claims as follows:

A. claims 1, 2, 4-8, 21, 22, and 24-27 under 35 U.S.C. § 103(a) as unpatentable over Naimark[1] and Park;[2]

B. claims 9, 18-20, and 28 under 35 U.S.C. § 103(a) as unpatentable over Naimark, Park, Reed,[3] and Donovan;[4] and

C. claims 3 and 23 under 35 U.S.C. § 103(a) as unpatentable over Naimark, Park, and Tobinaga.[5]

OBVIOUSNESS

Appellant addresses rejection A with independent claims 1, 18, and 21 grouped together. (App. Br. 11.) To address rejections B and C, Appellant

---

[1] Wendy Naimark et al., US 6,638,246 B1, issued Oct. 28, 2003.
[2] Jung-Hwan Park et al., US 2002/0082543 A1, published June 27, 2002.
[3] Michael L. Reed et al., US 6,197,013 B1, issued March 6, 2001.
[4] Maura G. Donovan et al., US 2004/0220607 A1, published Nov. 4, 2004.
[5] Yoshikazu Tobinaga et al., US 2005/0065463 A1, published March 24, 2005.

relies on the rejection A arguments (*id.* at 13), and the same issues are therefore dispositive for all three rejections. We select claim 1 as representative. As claims 2-9 and 18-28 have not been argued separately, they will stand or fall with claim 1. 37 C.F.R. § 41.37(c)(1)(vii).

The Issues

The Examiner found that (i) Naimark disclosed all the elements of claim 1 including detachable microneedles or microdarts (Ans. 3-4), but (ii) if Naimark did not disclose detachable microneedles or microdarts, Park did so (*id.* at 4-5). The Examiner then concluded:

> It would have been obvious for one having ordinary skill in the art at the time the invention was made to modify the device of Naimark to utilize detachable microneedles, as disclosed by Park, in order to allow for controlled release of the drug, specific drug release patterns, and specific interactions with body cells.

(*Id.* at 5.)

According to the Examiner, (iii) Naimark disclosed microdarts that fold into an inflatable member as claimed (*id.* at 5-6), but (iv) if Naimark did not disclose the claimed fold configuration,

> it would have been obvious for one having ordinary skill in the art at the time the invention was made to form the microdarts to fold alongside the inner surface of the balloon of the embodiment of [Naimark's] Fig. 4 such that they lay covered by the outer surface of the balloon, as generally illustrated in [Naimark's] Fig. 6, thereby only establishing the expected results of providing a suitable means for ensuring the microdarts are protected while in the delivery configuration

(*id*. at 6).

Appellant disputes the Examiner's points (i) through (iv) and further argues that Naimark teaches away from using Park's detachable microneedles. Appellant also contends that (v) likening Naimark's needles which are disposed on a plate to the claimed microdarts is flawed "since the microdarts are claimed as 'connected to the inflatable member' and not to any plate" (App. Br. 11); and (vi) "the Examiner's suggested modification would impermissibly destroy the functioning of [Naimark's] device" (*id.* at 12).

Findings of Fact

1. Naimark's patent is entitled "Medical Device For Delivery Of A Biologically Active Material To A Lumen." (Naimark, Title) (emphasis omitted.)
2. Naimark described the device as an "apparatus for delivery of biologically active materials comprises a catheter and [a] balloon having micro-needles . . . . the biologically active material is delivered through lumens in the micro-needles." (*Id.*, Abstract.)
3. Naimark's Figure 4B is reproduced here:

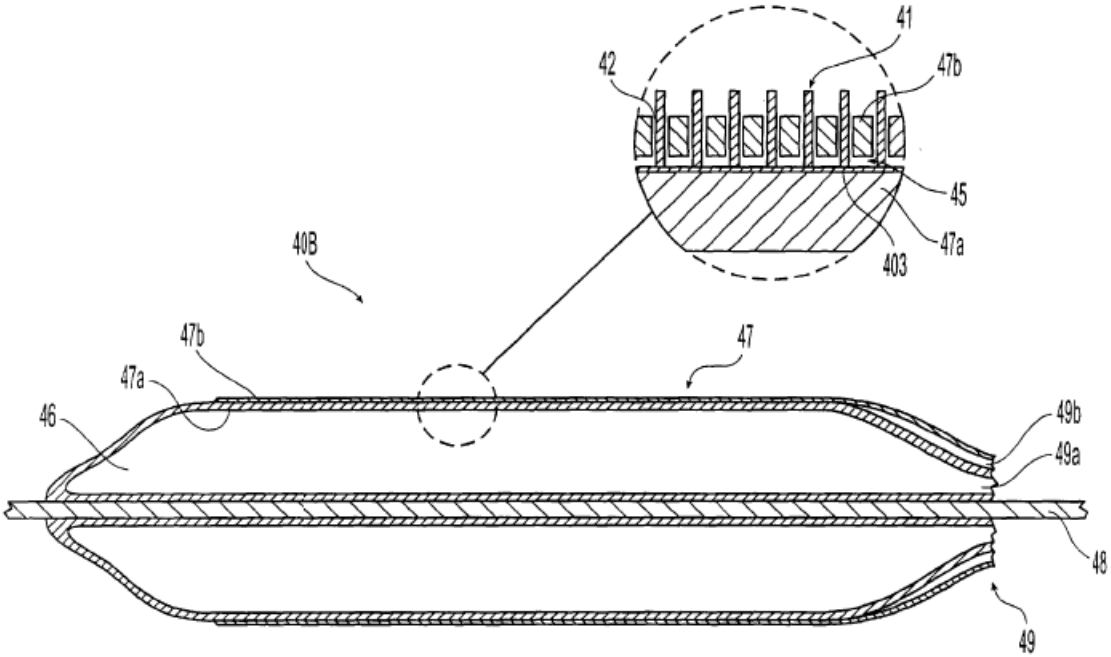

Fig. 4B

Figure 4B "depict[s] a cross-sectional view along the longitudinal axis of another embodiment of a balloon catheter of the invention, wherein solid micro-needles are disposed upon a plate which is disposed upon a balloon surface or within the balloon wall and the micro-needles project through a porous outer surface of the balloon." (*Id*. at col. 3, ll. 17-22.)

4. Naimark explained Figure 4B as follows:

> FIG **4B** shows another embodiment of an apparatus of the present invention. A plurality of solid micro-needles **41** are disposed upon a plate **403**. The plate **403** is disposed between an outer layer **47*b*** and an inner layer **47*a*** of an balloon wall **47** of a balloon **40B**. The outer layer **47b** has a plurality of pores **42**. The micro-needles **41** are positioned such that they project through the outer layer **47*b*** and are disposed on an outer surface of the balloon. The plate **403** and the outer layer **47*b*** define a compartment **45**, which contains a biologically active material. The biologically active material is placed into the compartment **45** using a first catheter lumen **49*b***. The balloon **40B** of this embodiment is inflated in a body lumen by inserting a liquid or gas into an inflation compartment **46** using an inflation lumen

> **49a** of the catheter **49** having a guidewire **48**. Upon inflation, the micro-needles **41** contact a surface of the body lumen piercing the surface and create micro nano-pores in the surface. The biologically active material is expelled from the pores **42** and is delivered into the micro- or nano-pores created by the micro-needles **41**. After the biologically active material is delivered, the balloon is deflated and removed from the body lumen.
>
> (*Id.* at col. 5, l. 65 – col. 6, l. 19.)

5. Naimark's Figures 6A-6C are reproduced here:

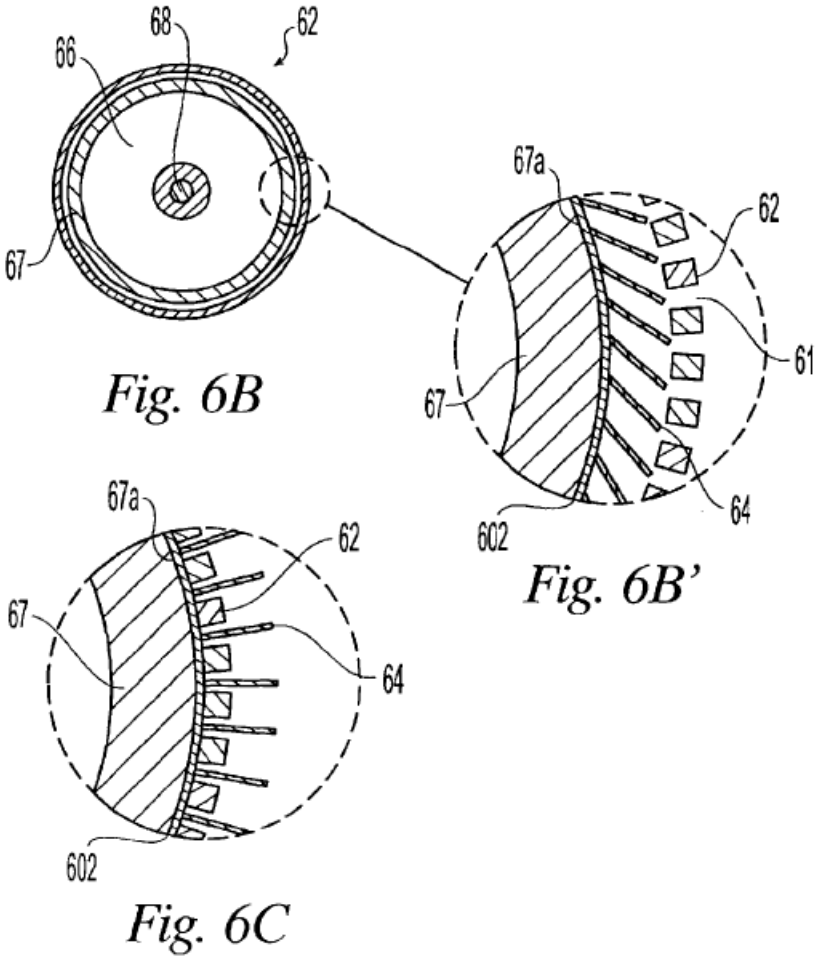

"FIG. **6B** depicts a cross-sectional view of the same embodiment which is cut along the line I-I in FIG. **6A**. A portion of the FIG. **6B** is enlarged to FIG. **6B**'. FIG. **6C** shows the same portion as in FIG. **6B**' and the balloon is in its inflated state." (*Id.* at col. 3, ll. 38-42.)

6. Naimark explained Figures 6A – 6C as follows:

> FIG. **6A** is a cross-sectional view of a balloon **60** along its longitudinal axis, and FIG. **6B** is a cross-sectional view of the balloon **60** along line I-I in FIG. **6A**. A portion of FIG. **6B** is enlarged and referred to as FIG. **6B**'. FIG. **6C** shows the same portion of the balloon as in FIG. **6B**' and in its inflated state. The balloon **60** has generally the same structure as that shown in FIGS. **5A** and **5B** except that it has solid micro-needles **64** instead of micro-needles having lumens and does not have an interior compartment. A plurality of micro-needles **64** are disposed upon a plate **602** which is disposed on the outer surface **67*a*** of a balloon wall **67**. The balloon **60** comprises an inflation compartment **66**. When the balloon **60** is in its deflated state, the micro-needles **64** lay along the outer surface **67*a*** of the balloon wall **60** and are covered by a sheath **62** as shown in Fig. **6B**'. The sheath **62** has a plurality of ports or openings **61**.

(*Id.* at col. 6, l. 60 – col. 7, l. 8.)

7. Naimark stated: "Bioabsorbable polymers are preferable in case the micro-needles are broken and left in a body lumen or tissue." (*Id.* at col. 12, ll. 51-53.)

8. Park's patent application is entitled "Microneedle Devices And Production Thereof." (Park, Title) (emphasis omitted.)

9. According to Park:

> The devices disclosed herein are useful in transport of material into or across biological barriers including the skin (or parts thereof); the blood-brain barrier; mucosal tissue (e.g., oral, nasal, ocular, vaginal, urethral, gastrointestinal, respiratory); blood vessels; lymphatic vessels; or cell membranes (e.g., for the introduction of material into the interior of a cell or cells). The biological barriers can be in humans or other types of animals, as well as in plants, insects, or other organisms, including bacteria, yeast, fungi, and embryos. The microneedle

devices can be applied to tissue internally with the aid of a catheter or laparoscope.

(*Id.* at 3, [0034].)

10. Park disclosed:

In one variation of this embodiment, the micro-needles may be purposefully sheared off from the substrate after penetrating the biological barrier. . . . The portion of the microneedles which remains in the skin or other biological barrier then releases drug over time according to a profile determined by the composition and geometry of the microneedles, the concentration of the drug, and other factors.

(*Id.* at 10, [0124].)

11. Park disclosed:

Microneedle shape and content can be designed to control the breakage of microneedles. For example, an indentation can be introduced into microneedles either at the time of fabrication or as a subsequent step. In this way, microneedles preferentially break at the site of the indentation.

(*Id.* at 10, [0126].)

Principles of Law

[O]bviousness must be determined in light of all the facts, and there is no rule that a single reference that teaches away will mandate a finding of nonobviousness. Likewise, a given course of action often has simultaneous advantages and disadvantages, and this does not necessarily obviate motivation to combine. . . . Where the prior art contains "apparently conflicting" teachings (i.e., where some references teach the combination and others teach away from it) each reference must be considered "for its power to suggest solutions to an artisan of ordinary skill.... consider[ing] the degree to which one reference

> might accurately discredit another." *In re Young*, 927 F.2d 588, 591 (Fed.Cir.1991).

Medichem, S.A. v. Rolabo, S.A., 437 F.3d 1157, 1165 (Fed. Cir. 2006).

In re Mouttet, 686 F.3d 1322, 1332 (Fed. Cir. 2012) (the Board's determination that the difference in the circuitry—electrical versus optical—does not affect the overall principle of operation of a programmable arithmetic processor was supported by substantial evidence. *See, e.g., In re Umbarger*, 407 F.2d 425, 430-31 (CCPA 1969) (finding [*In re Ratti*, 270 F.2d 810, 813 (CCPA 1959)] inapplicable where the modified apparatus will operate "on the same principles as before").

Analysis

On issue (i), we agree with Appellant that Naimark did not describe detachable micro darts configured to detach from the inflatable member upon insertion into a target region. (*See* App. Br. 11.) Contrary to the Examiner's interpretation, "configured to detach" is a structural limitation, not the mere capability of being broken if sufficient force is brought to bear. The rejection relying on that claim interpretation is reversed.

The Examiner's second basis for rejection (issue (ii)) is that Naimark and Park rendered the claims obvious. On issue (ii), we agree with the Examiner. As the Examiner found, Naimark was aware that microneedles could break, and specifically taught using bioabsorbable materials to accommodate that possibility, thus avoiding complications that might be caused by non-resorbable needles. (FF 7.) Like Naimark, Park explicitly taught that its invention was to be used in blood vessels, among other tissues. (FF 9.) Improving Naimark's micro-needles by using Park's

detachable configuration would allow for controlled release of drug, specific release patterns, and specific interactions with body cells, as the Examiner found. (Ans. 5.) "[I]f a technique has been used to improve one device, and a person of ordinary skill in the art would recognize that it would improve similar devices in the same way, using the technique is obvious unless its actual application is beyond his or her skill." *KSR Int'l Co. v. Teleflex Inc.*, 550 U.S. 398, 417 (2007).

We also agree with the Examiner that Naimark did not teach away from combining Park's teachings with its own. (Ans. 11.) Naimark apparently did not see the advantages in microdarts or needles configured to detach, and its teaching to avoid complications caused by breakage by using resorbable material was not a suggestion to deliberately make the darts detachable. However, Park disclosed the advantages of detachable microneedles or darts, and effectively showed how the breakage that Naimark may not have preferred could be turned to advantage if designed into the device. A person of ordinary skill in the art would have appreciated that aspect of Park, and seen how Park's teaching would have outweighed a negative inference drawn from Naimark. *See Medichem*, 437 F.3d at 1165.

Appellant contends that likening Naimark's needles which are disposed on a plate to the claimed microdarts is flawed "since the microdarts are claimed as 'connected to the inflatable member' and not to any plate." (App. Br. 11.) Naimark explained the connection of the needles to a plate on the inner or outer surface of the balloon. (FF 4, 6.) The Examiner responds that Naimark's needles are properly considered as "connected to the inflatable member," even if connected through a plate, which itself expands and contracts with the surface of the balloon. (Ans. 10.) Appellant does not

direct attention to a limiting definition of "connected" excluding connection via a plate. Under this circumstance, we agree with the Examiner that Naimark's needles are connected to an inflatable member.

Appellant contends that the Examiner's suggested modification would impermissibly destroy the functioning of Naimark's device. (App. Br. 12-13.) According to Appellant, detached "micro-needles would prevent the therapeutic agent from seeping into the pore" created by the micro-needle. (*Id.* at 13.) This argument is unpersuasive because Naimark and Park described the same function – deliver a therapeutic agent via microdart or needle. (*See* Ans. 12.) *See*, *In re Umbarger*, 407 F.2d 425, 430-31 (CCPA 1969) (finding similar argument unpersuasive where the modified apparatus will operate "on the same principles as before").

SUMMARY

We affirm the rejection of claims 1, 2, 4-8, 21, 22, and 24-27 under 35 U.S.C. § 103(a) as unpatentable over Naimark and Park.

We affirm the rejection of claims 9, 18-20, and 28 under 35 U.S.C. § 103(a) as unpatentable over Naimark, Park, Reed, and Donovan.

We affirm the rejection of claims 3 and 23 under 35 U.S.C. § 103(a) as unpatentable over Naimark, Park, and Tobinaga.

No time period for taking any subsequent action in connection with this appeal may be extended under 37 C.F.R. § 1.136(a).

AFFIRMED

cdc