UNITED STATES PATENT AND TRADEMARK OFFICE

UNITED STATES DEPARTMENT OF COMMERCE
United States Patent and Trademark Office
Address: COMMISSIONER FOR PATENTS
P.O. Box 1450
Alexandria, Virginia 22313-1450
www.uspto.gov

APPLICATION NO.	FILING DATE	FIRST NAMED INVENTOR	ATTORNEY DOCKET NO.	CONFIRMATION NO.
11/973,103	10/04/2007	Bran Ferren	0504-004-002I-DIV001	9369

44765 7590 01/30/2013
THE INVENTION SCIENCE FUND
CLARENCE T. TEGREENE
11235 SE 6TH STREET
SUITE 200
BELLEVUE, WA 98004

EXAMINER
CRANDALL, LYNSEY P

ART UNIT	PAPER NUMBER
3769	

MAIL DATE	DELIVERY MODE
01/30/2013	PAPER

Please find below and/or attached an Office communication concerning this application or proceeding.

The time period for reply, if any, is set in the attached communication.

UNITED STATES PATENT AND TRADEMARK OFFICE

BEFORE THE PATENT TRIAL AND APPEAL BOARD

Ex parte BRAN FERREN, MURIEL Y. ISHIKAWA,
EDWARD K.Y. JUNG, NATHAN P. MYHRVOLD,
CLARENCE T. TEGREENE, and LOWELL L. WOOD JR.

Appeal 2011-002567
Application 11/973,103
Technology Center 3700

Before DONALD E. ADAMS, JEFFREY N. FREDMAN, and
JACQUELINE WRIGHT BONILLA, *Administrative Patent Judges*.

FREDMAN, *Administrative Patent Judge*.

DECISION ON APPEAL

This is an appeal under 35 U.S.C. § 134 involving claims to a hair depilation device. The Examiner rejected the claims as obvious. We have jurisdiction under 35 U.S.C. § 6(b). We affirm-in-part.

Statement of the Case

Background

"The present application relates, in general, to the field of hair treatment devices and methods, and more particularly to depilation devices and methods" (Spec. 1, ll. 25-26).

The Claims

Claims 29-32 and 34-45 are on appeal. Claim 29 is representative and reads as follows:

> 29. A depilation device comprising:
>
> a) a housing having at least one active surface and sized and configured to be held by a human hand;
>
> b) at least one light source housed within said housing;
>
> c) at least one lens configured to modify light from said at least one light source to produce at least one beam each having a short, narrow beam waist of limited spatial extent, said at least one beam exiting said at least one active surface such that said beam waist occurs at a first specified distance range from said at least one active surface;
>
> d) a proximity sensor mounted in said housing and configured for detecting when said at least one active surface of said housing is within a second specified distance range from a skin surface and generating a sensor signal;
>
> e) control circuitry configured to process said sensor signal from said proximity sensor and generate a laser drive signal responsive to said sensor signal indicating that said at least one active surface is within said second specified distance range; and
>
> f) a light source driver configured to activate said at least one light source responsive to said laser drive signal;
>
> wherein said first specified distance range is less than said second specified distance range.

The issues

A. The Examiner rejected claims 29-32, 34-39, 41, and 44 under 35 U.S.C. § 103(a) as obvious over Cense[1] and Neev[2] (Ans. 4-7).

B. The Examiner rejected claims 42, 43, and 45 under 35 U.S.C. § 103(a) as obvious over Cense, Neev, and Dover[3] (Ans. 7).

C. The Examiner rejected claim 40 under 35 U.S.C. § 103(a) as obvious over Cense, Neev, and Schneider[4] (Ans. 7-8).

A. 35 U.S.C. § 103(a) over Cense and Neev

The Examiner finds that:

> Cense describes a depilation device comprising: a housing (3, Fig. 1) sized and configured to be held by a human hand (handle 5, Fig. 1) with an active surface (15, Fig. 1 and the entire bottom of the housing); at least one light source (laser diode 9, Fig. 1 and Par 0023) housed within the housing; a proximity sensor (optical sensors 63, Figs. 1 and 4) for detecting when the active surface of the housing is within a specified distance range (predetermined limits) from a skin surface (Par 0027) and generating a sensor signal; control circuitry (37, Fig. 1).

(Ans. 4-5). The Examiner finds that Cense teaches an embodiment with "a first specified distance range that is less than said second specified distance range, since the target beam is above the skin surface and the distance sensed by the proximity sensors (Fig. 4) is at the skin surface, a distance further from the active surface" (Ans. 5).

---

[1] Cense et al., US 2002/0173781 A1, published Nov. 21, 2002.
[2] Neev, J., US 6,168,590 B1, issued Jan. 2, 2001.
[3] Dover et al., US 2006/0020260 A1, published Jan. 26, 2006.
[4] Schneider, R., US 5,846,080, issued Dec. 8, 1998.

The Examiner finds that "Cense is silent with regards to a lens configured to modify light into a beam having a short, narrow beam waist" (Ans. 5). The Examiner finds that "Neev discloses that in order to target single hairs the beam spot size should be on the order of the diameter of a single hair shaft" (Ans. 5).

The Examiner finds that in "order to achieve this single hair interaction, a lens with an f-number in the range of 0.4 to about 2.5 is used" (Ans. 5). The Examiner finds that "it is commonly known in the art that the numerical aperture and f-number are dependent on each other such that the numerical aperture equals half of the inverse of the f-number. With this equation, the numerical apertures taught by Neev would be in the range of 0.2 to 1.25" (Ans. 5).

The Examiner finds it obvious to "include the conventional lens taught by Neev in the laser depilation device taught by Cense in order to produce a highly convergent beam so that individual hairs can be specifically targeted as taught by Neev" (Ans. 6).

The issue with respect to this rejection is: Does the evidence of record support the Examiner's conclusion that Cense and Neev render claims 29-32, 34-39, 41, and 44 obvious?

Findings of Fact

The following findings of fact ("FF") are supported by a preponderance of the evidence of record.

1. Cense teaches that the "invention can be used, for example, in a hair removing device . . . such as a laser epilator, a laser shaver or a flashlight epilator" (Cense, abstract).

2. Cense teaches that "device **1** comprises a housing **3** with a handle **5**, so that the device **1** is portable and can be placed on or moved over skin **7** to be treated. The housing **3** accommodates a radiation source, in particular a laser source **9** such as a diode laser" (Cense 3 ¶ 0023).

3. Cense teaches "eight detectors **43** which are arranged at small, regular distances from each other around the exit opening **15**. The detectors **43** can suitably be used to measure a biophysical property by means of which the human skin can be characterized" (Cense 3 ¶ 0025).

4. Cense teaches a laser epilation device where the "operation of such a laser shaver is basically the same as that of the above-discussed laser epilation devices, however, the target position of the laser beam is not in the hair root but in a position on the hair just above the surface of the skin" (Cense 5 ¶ 0029).

5. Cense teaches that in "each target position **16**, the laser beam **9** is activated, during a predetermined period of time and with a predetermined intensity, by the control unit **37**" (Cense 3 ¶ 0024).

6. Cense teaches that as "the control unit **37** can only activate the laser source **9** if all detectors **43** detect the presence of human skin against the skin contact element **21**, a very reliable protection of the device **1** is provided against accidental or deliberate emission of the laser beam **13** via the exit opening **15**" (Cense 4 ¶ 0025). Cense teaches that the "control unit **37** comprises a comparator" (Cense 4 ¶ 0025).

7. Figure 4 of Cense is reproduced below:

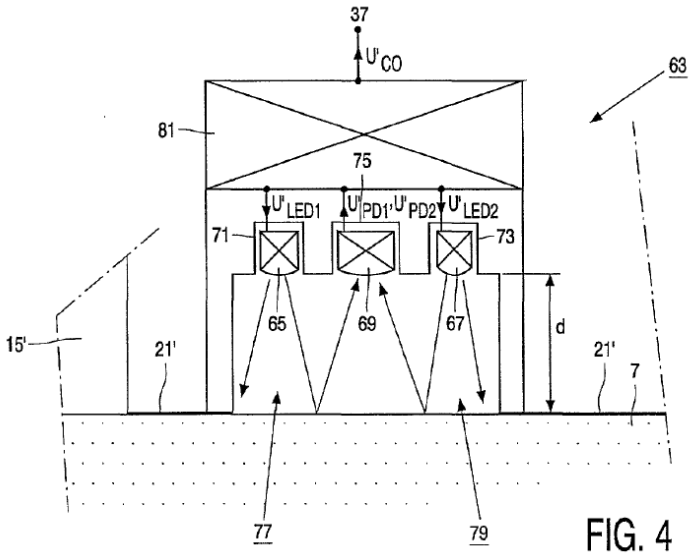

FIG. 4

"FIG. 4 diagrammatically shows a detector of a second example of a device" (Cense 3 ¶ 0021).

8. Cense teaches that

> The light sources **65**, **67** and the light sensor **69** are at a predetermined distance d from the surface of the skin **7** only if the skin contact element **21** is in contact with the skin **7** at the location of the relevant detector **63**. The amounts of light received by the light sensor depend on the distance between the light sources **65**, **67** and the skin **7** and on the distance between the light sensor **69** and the skin **7**, and they decrease particularly substantially if the skin contact element **21** is not in contact with the surface of the skin **7**, in which case an amount of light from the light sources **65**, **67** can escape via the space present between the skin contact element **21** and the skin.

(Cense 5 ¶ 0027).

9. Neev teaches a depilation method where a "beam is focused to a dimension on the order of the diameter of a single hair shaft or smaller. When the hair and the beam are aligned, all the incident light is intercepted

by the hair shaft surface and the entire beam, at the time of such an alignment, is directed at the targeted hair alone" (Neev, col. 14, ll. 45-50).

10. Neev teaches that the

> beam diameter (FWHM) in this single-beam/single hair interaction configuration should be in the range from about 5 μm to about 360 μm with a preferred value of from about 5 μm to about 60 μm. A conventional lens or a fiber lens with an f number in the range of from about 0.4 to about 2.5 may be used with a preferred range of from about 1.0 to about 1.7.

(Neev, col. 15, ll. 11-17).

11. The Examiner finds that the "numerical apertures taught by Neev would be in the range of 0.2 to 1.25" (Ans. 5).

12. Neev teaches that "the light source, coupling optics, and irradiation unit may be encompassed in a single, hand-held device. In this case, the light source is preferably an array of diode lasers coupled directly to the irradiating unit, and is powered by a small external power supply" (Neev, col. 10, ll. 46-50).

13. Neev teaches that a "simple microprocessor may be used to compare signals from a photodiode monitoring the reflectance of the high reflectance coating" (Neev, col. 6, ll. 58-60).

14. Neev teaches that "the system may be fully or partially automated through the use of an automated feedback/analyzer **238** and a computer/control module **240**" (Neev, col. 10, ll. 39-41).

15. The Specification teaches that the "device 100 includes an active surface 106 which is placed against a skin surface 108 on which are hairs 110 that are to be shaved or trimmed" (Spec. 3, l. 29 to 2, l. 2).

16. The Specification teaches that the "photo detector is positioned in the housing relative to the light source so that the photo detector is oriented to detect light from the skin structure when the light source is positioned within a selected distance range of the skin structure" (Spec. 8, ll. 14-16).

17. The Specification teaches that "[l]ight reflected or emitted from skin surface 108 in response to delivery of light to skin surface 108 from light source 116 is detected by photo detector 126 when active surface 106 of depilation device 100 is within a selected distance range of skin surface 108" (Spec. 9, ll. 15-18).

18. The Specification teaches that the "optical system may have an f-number of between about 1.2 and about 11.3. In another embodiment the optical system may have an f-number of between about 1.68 and about 3.46. In still another embodiment, the optical system 30 may have an f-number of between about 2 and about 2.86" (Spec. 8, ll. 27-30).

Principles of Law

"The combination of familiar elements according to known methods is likely to be obvious when it does no more than yield predictable results." *KSR Int'l Co. v. Teleflex Inc*., 550 U.S. 398, 416 (2007). "If a person of ordinary skill can implement a predictable variation, § 103 likely bars its patentability." *Id.* at 417. As noted by the Court in *KSR*, "[a] person of ordinary skill is also a person of ordinary creativity, not an automaton." 550 U.S. at 421.

Claim terms are interpreted using the broadest reasonable interpretation in light of the Specification. *See, e.g., In re Hyatt*, 211 F.3d

1367, 1372 (Fed. Cir. 2000) ("[D]uring examination proceedings, claims are given their broadest reasonable interpretation consistent with the specification.").

Analysis

Claim 29

Cense teaches a depilation device (FF 1) comprising:

a) "a housing **3** with a handle **5**, so that the device **1** is portable and can be placed on or moved over skin **7** to be treated" (Cense 3 ¶ 0023; FF 2),

b) where the "housing **3** accommodates a radiation source, in particular a laser source **9** such as a diode laser" (Cense 3 ¶ 0023; FF 2).

d) where

> The light sources **65**, **67** and the light sensor **69** are at a predetermined distance d from the surface of the skin **7** only if the skin contact element **21** is in contact with the skin **7** at the location of the relevant detector **63**. The amounts of light received by the light sensor depend on the distance between the light sources **65**, **67** and the skin **7** and on the distance between the light sensor **69** and the skin **7**, and they decrease particularly substantially if the skin contact element **21** is not in contact with the surface of the skin **7**, in which case an amount of light from the light sources **65**, **67** can escape via the space present between the skin contact element **21** and the skin **7**.

(Cense 5 ¶ 0027; FF 8).

e) where, because "the control unit **37** can only activate the laser source **9** if all detectors **43** detect the presence of human skin against the skin contact element **21**, a very reliable protection of the device **1** is provided against accidental or deliberate emission of the laser beam **13** via the exit opening **15**" (Cense 4 ¶ 0025; FF 6).

f) where for "each target position **16**, the laser beam **9** is activated, during a predetermined period of time and with a predetermined intensity, by the control unit **37**" (Cense 3 ¶ 0024; FF 5).

Cense does not teach the use of a lens as required by c) of claim 29.

Neev teaches a depilation method where a "beam is focused to a dimension on the order of the diameter of a single hair shaft or smaller. When the hair and the beam are aligned, all the incident light is intercepted by the hair shaft surface and the entire beam, at the time of such an alignment, is directed at the targeted hair alone" (Neev, col. 14, ll. 45-50; FF 9). Neev further teaches an element c) where the

> beam diameter (FWHM) in this single-beam/single hair interaction configuration should be in the range from about 5 μm to about 360 μm with a preferred value of from about 5 μm to about 60 μm. A conventional lens or a fiber lens with an f number in the range of from about 0.4 to about 2.5 may be used with a preferred range of from about 1.0 to about 1.7.

(Neev, col. 15, ll. 11-17; FF 10).

Applying the *KSR* standard of obviousness to the findings of fact, we conclude that an ordinary artisan would have reasonably found it obvious to incorporate the focusing lens of Neev into the depilation device of Cense "in order to produce a highly convergent beam so that individual hairs can be specifically targeted as taught by Neev" (Ans. 6). Such a combination is merely a "predictable use of prior art elements according to their established functions." *KSR*, 550 U.S. at 417.

First and second specified distances

Appellants contend that the "Examiner's assumption that 'the specified distance range is the distance from the beam waist to the skin surface,' is clearly in conflict with the explicit language of claims 29 and 45, and the Examiner has not offered any cogent arguments for making this assumption" (App. Br. 27).

The Examiner finds that:

> Cense discloses an embodiment where the light source's target position is above the skin surface, in order to cut the hair above the skin (Par 0029). This specific embodiment has a first specified distance range that is less than said second specified distance range, since the target beam is above the skin surface and the distance sensed by the proximity sensors (Fig. 4) is at the skin surface, a distance further from the active surface.

(Ans. 5).

We find that the Examiner has the better position. The Specification teaches that the "device 100 includes an active surface 106 which is placed against a skin surface 108 on which are hairs 110 that are to be shaved or trimmed" (Spec. 3, l. 29 to 2, l. 2; FF 15). Similarly, as shown in Figure 4 of Cense, the light sensor 69, on the active surface placed near the skin, is a second distance d from the skin (FF 7). Regarding a first distance, Cense teaches a laser epilation device where the "operation of such a laser shaver is basically the same as that of the above-discussed laser epilation devices, however, the target position of the laser beam is not in the hair root but in a position on the hair just above the surface of the skin" (Cense 5 ¶ 0029; FF 4).

That is, while the second distance d reaches from the active surface of sensor 69 to the skin, the first distance d represents a shorter distance from the laser beam to a position in the hair shaft above the skin, satisfying the requirement of claim 29 that "said first specified distance range is less than said second specified distance range."

Focusing a laser beam above the skin surface

Appellants contend that "Cense does not teach focusing a laser beam to a position above the skin surface, nor does it suggest targeting a laser beam above or below a skin surface, since the laser beam is simply directed toward the skin surface" (App. Br. 38).

We are not persuaded. Cense teaches a laser epilation device where the "operation of such a laser shaver is basically the same as that of the above-discussed laser epilation devices, however, the target position of the laser beam is not in the hair root but in a position on the hair just above the surface of the skin" (Cense 5 ¶ 0029; FF 4). Thus, Cense teaches the use of a laser beam focused above the surface for a laser shaver. It is Neev who teaches focusing the laser beam on the target (FF 9-10) and thus, it is the combination of the teachings of Cense and Neev which suggest laser shaving by focusing a highly convergent beam above the skin surface (*see* Ans. 6). *See In re Keller*, 642 F.2d 413, 425 (CCPA 1981) ("The test for obviousness is not whether the features of a secondary reference may be bodily incorporated into the structure of the primary reference; nor is it that the claimed invention must be expressly suggested in any one or all of the references. Rather, the test is what the combined teachings of the references would have suggested to those of ordinary skill in the art".) Here,

incorporation of the focusing lens of Neev into the laser depilation device of Cense would reasonably "produce a highly convergent beam so that individual hairs can be specifically targeted as taught by Neev" (Ans. 6).

Proximity sensor

Appellants contend that the "Examiner has failed to demonstrate with objective evidence that Cense teaches or suggests 'a proximity sensor mounted in said housing and configured for detecting when said at least one active surface of said housing is within a second specified distance range from a skin surface and generating a sensor signal'" (App. Br. 42).

We are not persuaded. Cense teaches that

> The light sources **65**, **67** and the light sensor **69** are at a predetermined distance d from the surface of the skin **7** only if the skin contact element **21** is in contact with the skin **7** at the location of the relevant detector **63**. The amounts of light received by the light sensor depend on the distance between the light sources **65**, **67** and the skin **7** and on the distance between the light sensor **69** and the skin **7**, and they decrease particularly substantially if the skin contact element **21** is not in contact with the surface of the skin **7**, in which case an amount of light from the light sources **65**, **67** can escape via the space present between the skin contact element **21** and the skin **7**.

(Cense 5 ¶ 0027; FF 8). Cense extensively discusses proximity sensors (FF 3, 7). We have already addressed how Cense teaches that while the second distance d reaches from the active surface of sensor 69 to the skin, the first distance d represents a shorter distance from the laser beam to a position in the hair shaft above the skin, satisfying the requirement of claim 29 that "said first specified distance range is less than said second specified distance range."

Control circuitry

Appellants contend that "control unit 37 is NOT configured to 'process said sensor signal from said proximity sensor and generate a laser drive signal responsive to said sensor signal indicating that said at least one active surface is within said second specified distance range'" (App. Br. 42).

We are not persuaded. Cense teaches that "the control unit **37** can only activate the laser source **9** if all detectors **43** detect the presence of human skin against the skin contact element **21**, a very reliable protection of the device **1** is provided against accidental or deliberate emission of the laser beam **13** via the exit opening **15**" (Cense 4 ¶ 0025; FF 6). As discussed above, Cense extensively discusses proximity sensors (FF 7-8) and teaches measuring a distance d (FF 8). Consequently, we find that Cense reasonably teaches a control unit which processes a signal from a proximity sensor and only activates the laser when the proximity sensor indicates the appropriate location (FF 3, 7, 8).

Motivation to combine

Appellants contend that a "person having ordinary skill in the art would not be motivated to modify a reference in order to provide a feature <u>already found</u> in the reference" (App. Br. 43).

We are not persuaded. The ordinary artisan would have been motivated to further improve the accuracy of Cense using the focusing beam of Neev in order to ensure maximum accuracy in hair removal (*see* Ans. 6). As discussed in *DyStar:*

> an implicit motivation to combine exists not only when a suggestion may be gleaned from the prior art as a whole, but when the "improvement" is technology-independent and the

> combination of references results in a product or process that is more desirable, for example because it is stronger, cheaper, cleaner, faster, lighter, smaller, more durable, or more efficient.

DyStar Textilfarben GmbH & Co. Deutschland KG v. C.H. Patrick Co., 464 F.3d 1356, 1368 (Fed. Cir. 2006). Here the improvement resulting from combining Cense and Neev results in a depilation device with the expected advantages of improved accuracy and efficiency (FF 4, 9, 10).

Appellants also contend that "[m]odifying Cense as suggested by the Examiner would also impermissibly change the principle of operation of the device" (App. Br. 44).

We are not persuaded. This argument misapprehends the nature of the obviousness inquiry. The obviousness inquiry does not ask "whether the references could be physically combined but whether the claimed inventions are rendered obvious by the teachings of the prior art as a whole." *In re Etter*, 756 F.2d 852, 859 (Fed. Cir. 1985) (en banc). Rather, in a case such as this where each of the elements of the claim was known to the art, the obviousness inquiry requires a finding that the combination of known elements was obvious to a person with ordinary skill in the art. *KSR*, 550 U.S. at 420. Here, each of the elements of the claim is taught by Cense with the exception that Cense does not focus the laser beam with a lens. This deficiency in Cense is supplemented by Neev, who teaches the use of a lens to focus laser light for hair removal. The Examiner reasonably found that one of ordinary skill would be motivated to modify Cense in view of Neev "in order to produce a highly convergent beam so that individual hairs can be specifically targeted as taught by Neev" (Ans. 6).

Appellants contend that "the Examiner engaged in impermissible hindsight in modifying Cense in view of Neev to support the 103 Rejection" (App. Br. 46).

While we are fully aware that hindsight bias often plagues determinations of obviousness, *Graham v. John Deere Co*., 383 U.S. 1, 36 (1966), we are also mindful that the Supreme Court has clearly stated that "if a technique has been used to improve one device, and a person of ordinary skill in the art would recognize that it would improve similar devices in the same way, using the technique is obvious unless its actual application is beyond his or her skill." *KSR*, 550 U.S. at 417. In this case, we conclude that the person of ordinary skill would have recognized that Neev reasonably suggested the use of a lens in order to focus laser light onto single hairs (FF 9-10), which was a goal of the method of Cense (FF 4), and that the use of a focusing lens would further limit the effect of the laser to the hair rather than the surrounding skin (FF 9).

Claim 32

Appellants contend that the "Examiner has not demonstrated that a 'microprocessor' is taught by Cense, nor that a microprocessor would be inherent in the teachings of Cense" (App. Br. 48).

We are not persuaded. The rejection represents a combination of Cense and Neev. Cense expressly teaches that the "control unit 37 comprises a comparator" (Cense 4 ¶ 0025; FF 6) and Neev teaches that a "simple microprocessor may be used to compare signals from a photodiode monitoring the reflectance of the high reflectance coating" (Neev, col. 6, ll. 58-60; FF 13). We agree with the Examiner that given Neev's teaching to

use a microprocessor to compare signals, substituting Cense's comparator with a "microprocessor would have been an alternative equivalent to the control unit disclosed by Cense as it provides the exact same function" (Ans. 11).

Claims 38 and 39

Appellants contend that "the numerical apertures of Neev ('0.2 to 1.25') do not fall in the recited range 'between about 1.68 and about 3.46' of claim 38" (App. Br. 49).

We are not persuaded. Neev teaches that a "conventional lens or a fiber lens with an f number in the range of from about 0.4 to about 2.5 may be used with a preferred range of from about 1.0 to about 1.7" (Neev, col. 15, ll. 14-17; FF 10). The Examiner finds that "it is commonly known in the art that the numerical aperture and f-number are dependent on each other such that the numerical aperture equals half of the inverse of the f-number" (Ans. 5). The term f-number is defined[5] as "[t]he ratio of the focal length of a lens or lens system to the effective diameter of its aperture. Also called f-stop." The Examiner finds that the "numerical apertures taught by Neev would be in the range of 0.2 to 1.25" (Ans. 5; FF 11). The Examiner has made a factual finding, consistent with the dictionary meaning of the term f-number, which is not rebutted with evidence by Appellants. *See In re Geisler*, 116 F.3d 1465, 1470 (Fed. Cir. 1997) ("[A]ttorney argument [is] not the kind of factual evidence that is required to rebut a prima facie case of obviousness").

---

[5] See http://www.thefreedictionary.com/f+stop; accessed Jan. 23, 2013.

With regard to the range of "about 2 to about 2.86" in claim 39, even if we construe the range to exclude the apertures disclosed by Neev, these are adjacent points which would reasonably have been expected by the ordinary artisan to share similar properties in the absence of evidence to the contrary. *See In re Peterson*, 315 F.3d 1325, 1329 (Fed. Cir. 2003) ("We have also held that a prima facie case of obviousness exists when the claimed range and the prior art range do not overlap but are close enough such that one skilled in the art would have expected them to have the same properties").

Claim 41

Appellants contend that "Examiner has not explained how exactly one of ordinary skill in the art would incorporate a laser array as recited in Neev into the Cense device. A laser array could not be incorporated into the Cense device without significant modification to the Cense device" (App. Br. 51).

We are not persuaded. Neev teaches that a laser array is equivalent to other laser sources for hair removal (FF 12). We agree with the Examiner (Ans. 6-7) that it would have been obvious to substitute the equivalent laser array of Neev for the laser of Cense. *See KSR Int'l Co. v. Teleflex Inc.*, 550 U.S. 398, 417 (2007) ("If a person of ordinary skill can implement a predictable variation, § 103 likely bars its patentability.") Other than attorney argument, Appellants provide no reason why there would be any difficulty in substituting the laser array of Neev for the laser of Cense. *Geisler*, 116 F.3d at 1470.

Claim 44

Appellants contend that "it would not be reasonable to interpret the distance range of 'within about 50 and about 1000 µm of said skin surface' as recited in claim 44 to encompass a distance of 0 µm from the skin surface" (App. Br. 53).

The Examiner finds that "this specific distance would be chosen by the user to provide the desired treatment. For example, if the user wants a smooth shave the distance above the skin surface would be small" (Ans. 11).

We find that Appellants have the better position. The Examiner has not provided any evidence regarding the distance between an active surface of a device and the skin surface that would be desirable. We agree with Appellants that a distance of 0 µm is not a reasonable interpretation of about 50 µm. While a close shave is reasonably found to be desirable, there is no evidence on this record to support the Examiner's intimation that the range of within about 50 and about 1000 µm inherently represents a reasonable distance for a close shave. *See MEHL/Biophile Int'l. Corp. v. Milgraum*, 192 F.3d 1362, 1365 (Fed. Cir. 1999) ("Inherency ... may not be established by probabilities or possibilities. The mere fact that a certain thing may result from a given set of circumstances is not sufficient.")

Conclusion of Law

The evidence of record supports the Examiner's conclusion that Cense and Neev render claims 29, 32, 38, 39, and 41 obvious.

The evidence of record does not support the Examiner's conclusion that Cense and Neev render claim 44 obvious.

B. 35 U.S.C. § 103(a) over Cense, Neev, and Dover – claims 42, 43, 45

The Examiner finds that "Neev and Cense disclose all the limitations of claim 29, but are silent with regards to a motion sensor" (Ans. 7). The Examiner finds that Dover teaches a "laser apparatus for treating tissue which includes a sensor for detecting the proximity of the device to the skin . . . as well as a motion sensor . . . to ensure that all desired areas are treated" (Ans. 7). The Examiner finds that "Dover teaches a motion sensor that is an optical sensor" (Ans. 7). The Examiner finds it obvious to "modify the laser device taught by Cense and Neev with the motion sensor taught by Dover in order to provide effective treatment to all desired areas as taught by Dover" (Ans. 7).

The issue with respect to this rejection is: Does the evidence of record support the Examiner's conclusion that Cense, Neev, and Dover render claims 42, 43, and 45 obvious?

Findings of Fact

19. Dover teaches that in an "embodiment in which the treatment is hair removal, the depth is selected to be near the location of the follicular bulge of the hair" (Dover 1 ¶ 0008).

20. Dover teaches that "the sensor is a part of a circuit that detects if the sensor is not in close proximity to the skin and if not, turns off power to the light source" (Dover 5 ¶ 0062).

21. Dover teaches that the "actual manual speed provided by operator is measured with movement sensor incorporated into the scanning head. The preferred design of this sensor is made similar to optical mouse and contains an illumination source such as an LED or diode laser, a

detector, and a processor with an embedded algorithm for the speed calculation" (Dover 7 ¶ 0088).

22. Dover teaches that when "actual manual speed is higher than optimal one, the treatment area will contain untreated strips. . . . In one embodiment the device notifies the operator that manual speed must be reduced by generating a visual, audible or tactile warning signal" (Dover 7 ¶ 0088).

Analysis

Appellants contend that "Cense and Neev do not teach or suggest all recitations of claim 29. The Examiner did not allege that Dover teaches any other recitations of claim 29, but looked to Dover only in an attempt to show teaching of the recitations of dependent claims 42 and 43" (App. Br. 54). Appellants also repeat arguments for claim 45 which were addressed regarding claim 29. Appellant also contend that "various recitations of claim 45 are neither taught nor suggested by Cense, Neev and/or Dover" (App. Br. 58).

Since we have already concluded that Cense and Neev properly render claim 29 obvious for the reasons given above, and since Dover teaches incorporation of an optical motion sensor on a laser depilation type device (FF 19-22), we adopt the Examiner's position that the use of Dover's motion sensor on the depilation device of Cense and Neev would have been an obvious incorporation in order to avoid untreated areas (FF 22).

Conclusion of Law

The evidence of record supports the Examiner's conclusion that Cense, Neev, and Dover render claims 42, 43, and 45 obvious.

C. 35 U.S.C. § 103(a) over Cense, Neev, and Schneider – claim 40

The Examiner finds "Cense and Neev are discussed above, but are silent with regards to using an Nd:Yag laser" (Ans. 7). The Examiner finds that Schneider teaches "a laser device used for hair removal that comprises an Nd:Yag laser" (Ans. 7). The Examiner finds it obvious to "choose an Nd:Yag laser or any number of other types of lasers, as an alternative equivalent to the laser diode taught by Cense" (Ans. 7-8).

The Examiner provides sound fact-based reasoning for combining Schneider with Cense and Neev. We adopt the fact finding and analysis of the Examiner as our own. Appellants argue the underlying obviousness rejection over Cense and Neev, but Appellants do not identify any material defect in the Examiner's reasoning for combining Schneider with Cense and Neev. Since Appellants only argue the underlying rejection of Cense and Neev which we affirmed above, we affirm this rejection for the reasons stated by the Examiner.

SUMMARY

In summary, we affirm the rejection of claims 29, 32, 38, 39, and 41 under 35 U.S.C. § 103(a) as obvious over Cense and Neev. Pursuant to 37 C.F.R. § 41.37(c)(1)(vii)(2006), we also affirm the rejection of claims 30, 31, and 34-37, as these claims were not argued separately.

We reverse the rejection of claim 44 under 35 U.S.C. § 103(a) as obvious over Cense and Neev.

We affirm the rejection of claims 42, 43, and 45 under 35 U.S.C. § 103(a) as obvious over Cense, Neev, and Dover.

We affirm the rejection of claim 40 under 35 U.S.C. § 103(a) as obvious over Cense, Neev, and Schneider.

No time period for taking any subsequent action in connection with this appeal may be extended under 37 C.F.R. § 1.136(a)(1).

AFFIRMED-IN-PART

lp