UNITED STATES PATENT AND TRADEMARK OFFICE

UNITED STATES DEPARTMENT OF COMMERCE
United States Patent and Trademark Office
Address: COMMISSIONER FOR PATENTS
P.O. Box 1450
Alexandria, Virginia 22313-1450
www.uspto.gov

APPLICATION NO.	FILING DATE	FIRST NAMED INVENTOR	ATTORNEY DOCKET NO.	CONFIRMATION NO.
10/627,591	07/25/2003	Andrew Clark	PAT053229-US-CNT02	2973

1095 7590 02/12/2013
NOVARTIS PHARMACEUTICAL CORPORATION
INTELLECTUAL PROPERTY DEPARTMENT
ONE HEALTH PLAZA 101/2
EAST HANOVER, NJ 07936-1080

EXAMINER
DOUGLAS, STEVEN O

ART UNIT	PAPER NUMBER
3771	

NOTIFICATION DATE	DELIVERY MODE
02/12/2013	ELECTRONIC

Please find below and/or attached an Office communication concerning this application or proceeding.

The time period for reply, if any, is set in the attached communication.

Notice of the Office communication was sent electronically on above-indicated "Notification Date" to the following e-mail address(es):

phip.patents@novartis.com

UNITED STATES PATENT AND TRADEMARK OFFICE

BEFORE THE PATENT TRIAL AND APPEAL BOARD

Ex parte ANDREW CLARK and GEORGE H. FOULDS

Appeal 2011-001435
Application 10/627,591
Technology Center 3700

Before DEMETRA J. MILLS, FRANCISCO C. PRATS, and JEFFREY N. FREDMAN, *Administrative Patent Judges*.

FREDMAN, *Administrative Patent Judge*.

DECISION ON APPEAL

This is an appeal under 35 U.S.C. § 134 involving claims to a device for increasing bioavailability of an aerosolized active agent. The Examiner rejected the claims as anticipated. We have jurisdiction under 35 U.S.C. § 6(b). We affirm.

Statement of the Case

Background

"[T]he present invention is directed to a method for delivering an active agent formulation to the lungs of a human patient, said method comprising providing the active agent formulation at an inspiratory flow rate of below 17 liters per minute" (Spec. 4, ll. 3-6).

The Claims

Claims 23, 24, 26, 28-32 and 38-52 are on appeal.[1] Claim 23 is representative and reads as follows:

> 23. A device for increasing the bioavailability of an aerosolized active agent, said device comprising a flow restrictor for limiting the inspiratory flow of an aerosolized active agent formulation to a human patient to less than 17 liters per minute, wherein the device is adapted to aerosolize the active agent formulation and wherein the active agent formulation is (i) a powder, (ii) a solution, suspension, or slurry that may be nebulized, or (iii) suspended or dissolved in a propellant.

The issue

The Examiner rejected claims 23, 24, 26, 28-32 and 38-52 under 35 U.S.C. § 102(e) as anticipated by Rubsamen[2] (Ans. 4-7).

The Examiner finds that Rubsamen teaches a device "for increasing the bioavailability of an aerosolized active agent, said device comprising a

---

[1] Claims 33-37 were cancelled by Appellants in the Reply Brief filed August 23, 2010 and entered by the Examiner on October 29, 2010. This cancellation renders the New Grounds of Rejection over claims 33-37 moot.

[2] Rubsamen et al., US 5,735,263, issued Apr. 7, 1998.

flow restrictor (9, 22,37)" (Ans. 4). The Examiner finds that Rubsamen "discloses that a microprocessor controls and monitors the inspiratory flow of an aerosolized active agent formulation to a human patient (though the valve in the case of fig.1 and though the opening of the mouthpiece in the case of fig.10)" (*id.* at 5). The Examiner finds that Rubsamen limits inspiratory flow to "a rate of 0.1 to 2 liters per second ~ 6 to 12 liters per minute, which meets claimed flow rate of 'less than 17 liters per minute' and '10 liters per minutes'" (*id.*). The Examiner finds that Rubsamen "discloses wherein the device is adapted to aerosolize the active agent formulation and wherein the active agent formulation is (i) a powder, (ii) a solution, suspension, or slurry that may be nebulized, or (iii) suspended or dissolved in a propellant" (*id.*).

The issue with respect to this rejection is: Does the evidence of record support the Examiner's conclusion that Rubsamen anticipates claim 1?

Findings of Fact

The following findings of fact ("FF") are supported by a preponderance of the evidence of record.

1. The Specification teaches a

> device comprising a flow restricter for limiting the flow of the aerosolized active agent formulation to below 17 liters per minute. The flow restricter may be in the form of a simple orifice, a valve that provides for increasing resistance with increasing flow rate, a valve that provides for decreasing resistance with increasing flow rate or a valve that provides for high resistance at all flow rates except the desired flow rate

(Spec. 4, ll. 17-22).

2. Rubsamen teaches that to "maximize the efficiency of the delivery the narcotic formulation is released at (1) a measured inspiratory flow rate in the range of from about 0.10 to about 2.0 liters/second and (2) a measured inspiratory volume in the range of about 0.15 to about 0.8 liters" (Rubsamen, col. 5, ll. 50-54).

3. Figure 1 of Rubsamen is reproduced below:

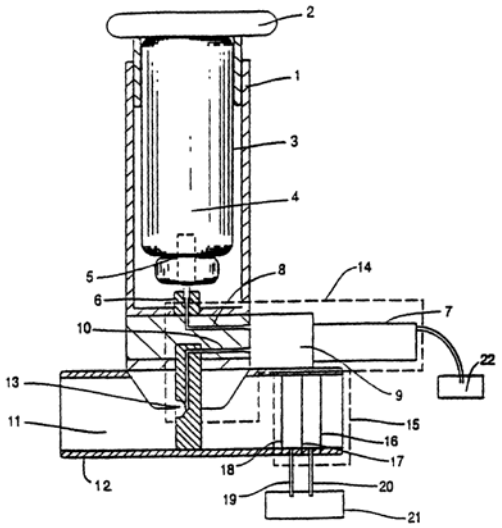

FIG. 1

"FIG. **1** is a cross-sectional view of a drug delivery device" (Rubsamen, col. 7, l. 45).

4. Rubsamen teaches "when treating a patient the drug should be released at approximately (±10%. preferably ±5% and most preferable as close as possible to the first release point) the same inspiratory flow rate and inspiratory volume each time-going back to the same point each time for the same patient ensures repeatable dosing" (Rubsamen, col. 13, ll. 27-32).

5. Rubsamen teaches that the "drug which is released to the patient may be in a variety of different forms. For example, the drug may be an aqueous solution of drug, i.e., drug dissolved in water and formed into

small particles to create an aerosol which is delivered to the patient" (Rubsamen, col. 14, l. 64 to col. 15, l. 1).

6. Rubsamen teaches that "the drug may be in a solution wherein a low-boiling point propellant is used as a solvent. In yet another embodiment the drug may be in the form of a dry powder which is intermixed with an airflow in order to provide for particleized delivery of drug to the patient" (Rubsamen, col. 15, ll. 1-6).

7. Rubsamen teaches:

> [A] hand-held, portable device which is comprised of (a) a means for separately measuring and analyzing the inspiratory flow rate and inspiratory volume of a patient and (b) a means for automatically releasing a measured amount of a narcotic into the inspiratory flow path of a patient, e.g. an automatic valve actuation means or mechanism for moving formulation through a porous membrane.

(Rubsamen, col. 23, ll. 14-21.)

8. Rubsamen teaches that the "device preferably includes a mouth piece at the end of the flow path, and the patient inhales from the mouth piece which causes an inspiratory flow to be measured within the flow path. This inspiratory flow causes an air flow transducer to generate a signal" (Rubsamen, col. 23, ll. 37-41).

9. Rubsamen teaches that the

> microprocessor can further integrate this continuous air flow rate signal. . . . At an appropriate point in the inspiratory cycle, the microprocessor can send a signal to an actuation means. When the actuation means is signaled, it releases a valve allowing analgesic drug and propellant to escape into the inspiratory flow path of the device and ultimately into the patient's lungs

(Rubsamen, col. 23, ll. 44-52).

10. Rubsamen teaches that:

> Propellant and narcotic drug are released from the canister **3** via the electrically controlled solenoid **7**. In that the valve **5** of the canister is continuously open, another valve, contained within solenoid **7**, facilitates the release of the drug. When the solenoid **7** allows release of propellant and drug, the propellant and drug flows through the flow path **8** and then through the solenoid actuated valve **9** into the flow path **10**, out through the nozzle **13** and then into the inspiratory flow path **11**

(Rubsamen, col. 24, ll. 25-33).

11. The Examiner finds that "a rate of 0.1 to 2 liters per second . . . meets the claimed flow rate of 'less than 17 liters per minute'" (Ans. 5).

Principles of Law

"A single prior art reference that discloses, either expressly or inherently, each limitation of a claim invalidates that claim by anticipation." *Perricone v. Medicis Pharmaceutical Corp.*, 432 F.3d 1368, 1375 (Fed. Cir. 2005).

Analysis

Claim interpretation is at the heart of patent examination because before a claim is properly interpreted, its scope cannot be compared to the prior art. In this case, Appellants contend that "Rubsamen et al discloses no flow restrictor for limiting the inspiratory flow of an aerosolized active agent" (App. Br. 5). Appellants also contend that "Rubsamen et al does not in any way limit the inspiratory flow to less than 17 liters per minute" (*id.*).

During prosecution, claim terms are given their broadest reasonable interpretation as they would be understood by persons of ordinary skill in the art in the light of the Specification. Therefore, we first turn to the Specification to interpret the term "flow restrictor."

The Specification teaches that the "flow restricter may be in the form of a simple orifice, a valve that provides for increasing resistance with increasing flow rate, a valve that provides for decreasing resistance with increasing flow rate or a valve that provides for high resistance at all flow rates except the desired flow rate" (Spec. 4, ll. 19-22; FF 1).

We therefore interpret the term "flow restricter" in claim 1 to broadly encompass any valve which releases the active agent only at the desired flow rate and which does not release the active agent at flow rates other than the desired flow rates. There is no structural requirement imposed by either claim 23 or by the Specification regarding how the valve achieves this specific release. Also, since claim 23 uses the open transitional phrase "comprising," claim 23 does not exclude the use of additional components to assist the valve in releasing the active agent only at the desired flow rate. *See Georgia-Pacific Corp. v. U.S. Gypsum Co.*, 195 F.3d 1322, 1327 (Fed. Cir. 1999) (The transitional term "comprising" is "inclusive or open-ended and does not exclude additional, unrecited elements or method steps.")

Turning to the prior art, Rubsamen teaches:

> [A] hand-held, portable device which is comprised of (a) a means for separately measuring and analyzing the inspiratory flow rate and inspiratory volume of a patient and (b) a means for automatically releasing a measured amount of a narcotic into the inspiratory flow path of a patient, e.g.

> an automatic valve actuation means or mechanism for moving formulation through a porous membrane.

(Rubsamen, col. 23, ll. 14-21; FF 7). Rubsamen teaches that the "device preferably includes a mouth piece at the end of the flow path, and the patient inhales from the mouth piece which causes an inspiratory flow to be measured within the flow path. This inspiratory flow causes an air flow transducer to generate a signal" (Rubsamen, col. 23, ll. 37-41; FF 8). Rubsamen teaches that the

> microprocessor can further integrate this continuous air flow rate signal. . . . At an appropriate point in the inspiratory cycle, the microprocessor can send a signal to an actuation means. When the actuation means is signaled, it releases a valve allowing analgesic drug and propellant to escape into the inspiratory flow path of the device and ultimately into the patient's lungs

(Rubsamen, col. 23, ll. 44-52; FF 9).

Thus, Rubsamen teaches a device with a valve that acts as a "flow restrictor," since the valve releases the active agent only at the desired flow rate and which does not release the active agent at flow rates other than the desired flow rates. While Rubsamen's valve is controlled by a microprocessor which operates an actuation means, consistent with our claim interpretation above, this valve satisfies the "flow restrictor" requirements since the claim and Specification do not require any specific valve structure for the "flow restrictor" and permit the inclusion of additional components as discussed above.

In addition, regarding the claimed flow rate of less than 17 liters per minute, Rubsamen teaches that to "maximize the efficiency of the delivery

the narcotic formulation is released at (1) a measured inspiratory flow rate in the range of from about 0.10 to about 2.0 liters/second" (Rubsamen, col. 5, ll. 50-53; FF 2). The Examiner finds that this flow rate includes the claimed range (*see* Ans. 5; FF 11). Anticipation has been found when a prior art range "does not exactly correspond to [the] claimed range," but the prior art range "does not significantly deviate from [the] claimed ranges." *See Perricone v. Medicis Pharm. Corp*., 432 F.3d 1368, 1377 (Fed. Cir. 2005).While Appellants urge that Rubsamen's methods include flow rates higher than those claimed, Appellants have provided no rebuttal evidence showing that the flow rate range of Rubsamen fails to describe flow rates within the claimed range.

Appellants also contend that the "Rubsamen et al device certainly is ***not*** capable of ***limiting*** flow rates to less than 17 liters per minute" (App. Br. 7).

As noted, Rubsamen expressly teaches that the device can deliver a formulation at rates ranging from 0.10 to about 2.0 liters/second (FF 2) which encompasses a range less than 17 liters per minute. Appellants have provided no evidence that Rubsamen is not enabled for the claimed flow rate. *Antor* explains that "[e]nablement of prior art requires that the reference teach a skilled artisan to make or carry out what it discloses in relation to the claimed invention." *In re Antor Media Corp*., 689 F.3d 1282, 1289, 1290 (Fed. Cir. 2012). *Antor* further teaches that the Appellants must show "that undue experimentation would be required to perform the claimed invention based on the teaching" in the prior art. *Id*. at 1289. Appellants

have made no clear or specific evidentiary showing as to undue experimentation of Rubsamen.

Appellants separately list claims 33, 38, 42, and 47, but only provide a specific argument for claim 42. Appellants contend that "Rubsamen et al does not disclose orifices sized so that an aerosolized active agent formulation may be delivered at an inspiratory flow rate of less than 17 liters per minute" (App. Br. 8).

We are not persuaded. Claim 42 simply requires an orifice sized to permit "an aerosolized active agent formulation may be delivered at an inspiratory flow rate that is limited to a rate of less than 17 liters per minute." Rubsamen teaches such an orifice, teaching that the "device preferably includes a mouth piece at the end of the flow path, and the patient inhales from the mouth piece which causes an inspiratory flow to be measured within the flow path" (Rubsamen, col. 23, ll. 37-40; FF 8). As discussed above, Rubsamen expressly teaches that the device can deliver a formulation at rates ranging from 0.10 to about 2.0 liters/second (FF 2) which encompasses a range less than 17 liters per minute.

While in Rubsamen, the flow rate is not **solely** limited by the orifice or mouthpiece, claim 42 does not require that the orifice is the sole element controlling the inspiratory flow rate. Claim 42 simply requires the ability to limit the flow rate below 17 liters per minute, a feature taught by Rubsamen (FF 2-10).

SUMMARY

In summary, we affirm the rejection of claims 23, 24, 26, 28-32 and 38-52 under 35 U.S.C. § 102(e) as anticipated by Rubsamen.

No time period for taking any subsequent action in connection with this appeal may be extended under 37 C.F.R. § 1.136(a).

AFFIRMED

cdc