UNITED STATES PATENT AND TRADEMARK OFFICE

UNITED STATES DEPARTMENT OF COMMERCE
United States Patent and Trademark Office
Address: COMMISSIONER FOR PATENTS
P.O. Box 1450
Alexandria, Virginia 22313-1450
www.uspto.gov

APPLICATION NO.	FILING DATE	FIRST NAMED INVENTOR	ATTORNEY DOCKET NO.	CONFIRMATION NO.
11/835,187	08/07/2007	Jean-Michel Vladimir Redoute	14993.62	1011

22913 7590 03/04/2013
Workman Nydegger
1000 Eagle Gate Tower
60 East South Temple
Salt Lake City, UT 84111

EXAMINER
LAM, TUAN THIEU

ART UNIT	PAPER NUMBER
2816	

NOTIFICATION DATE	DELIVERY MODE
03/04/2013	ELECTRONIC

Please find below and/or attached an Office communication concerning this application or proceeding.

The time period for reply, if any, is set in the attached communication.

Notice of the Office communication was sent electronically on above-indicated "Notification Date" to the following e-mail address(es):

Docketing@wnlaw.com

UNITED STATES PATENT AND TRADEMARK OFFICE

BEFORE THE PATENT TRIAL AND APPEAL BOARD

Ex parte JEAN-MICHEL VLADIMIR REDOUTE and
MICHIEL STEYAERT

Appeal 2010-008399
Application 11/835,187
Technology Center 2800

Before ERIC B. CHEN, MICHAEL J. STRAUSS, and JOHN G. NEW, *Administrative Patent Judges*.

NEW, *Administrative Patent Judge*.

DECISION ON APPEAL

SUMMARY

Appellants file this appeal under 35 U.S.C. § 134(a) from the Examiner's Final Rejection of claims 1, 3 and 5-9. Claims 1, 3 and 6-9 stand rejected as unpatentable under 35 U.S.C. § 103(a) as being obvious over the combination of Abdel-Hamid et al. (US 2006/0145734 A1, July 6, 2006) ("Abdel-Hamid") and Tang et al. (US 6,700,422 B2, March 2, 2004) ("Tang"). The Examiner also rejected claim 5 as unpatentable under 35 U.S.C. § 103(a) as being obvious over the combination of Abdel-Hamid, Tang and Chen et al. (US 2007/0008036 A1, January 11, 2007) ("Chen").[1]

We have jurisdiction under 35 U.S.C. § 6(b).

We reverse.

STATEMENT OF THE CASE

Appellants' invention is directed to a driver circuit suitable for outputting a signal onto an output line affected by conducted EMI (electromagnetic interference), with a slope control circuit and an output circuit (op-amp, Mo, M13 to M21), and which can be used for driving a LIN network. Abstract.

---

[1] Appellants also argue that the Examiner erred in objecting to claim 4 as being dependent upon a rejected base claim. App. Br. 23. As we have no jurisdiction over objections made by the Examiner, we do not address Appellants' argument in these respects. *See* M.P.E.P. § 706.01 ("[T]he Board will not hear or decide issues pertaining to objections and formal matters which are not properly before the Board.")

GROUPING OF CLAIMS

Because Appellants either do not argue the claims separately or, with respect to claims 5 and 9, argue that the Examiner erred for substantially the same reasons with respect to the other claims, we select claim 1 as representative of this group. App. Br. 25, 37, 45. Claim 1 recites:

> 1. A driver circuit suitable for outputting a signal onto a line affected by conducted EMI, the driver circuit comprising:
>
> a slope control circuit receiving an input signal and outputting a slope controlled version of the input signal;
>
> an operational amplifier, having two inputs and an output, the output of the slope control circuit being connected to a first one of said inputs of the operational amplifier; and
>
> an output transistor, receiving at its input the output of the operational amplifier-whereby the output transistor is arranged to output the slope controlled version to the line;
>
> whereby the second input of the operational amplifier is connected over a feedback path with the output of the output transistor
>
> whereby the output signal of the slope control circuit and the output of the operational amplifier are signals having a rising edge and a falling edge, both edges being slope controlled and
>
> whereby the feedback path contains a clipping circuit for reducing an amount of the conducted EMI in the feedback to the amplifier.

App. Br. 47.

ISSUES AND ANALYSES

Issue 1

Appellants argue that the Examiner erred in finding the limitation of claim 1 reciting "the output signal of the slope control circuit and the output of the operational amplifier are signals having a rising edge and a falling edge, both edges being slope controlled" as being obvious over the combination of Abdel-Hamid and Tang. App. Br. 24. We therefore address whether the Examiner so erred.

Analysis

Figure 3 of Abdel-Hamid is relied upon by Appellants (App. Br. 26), and we therefore reproduce it below to facilitate our analysis and explanation.

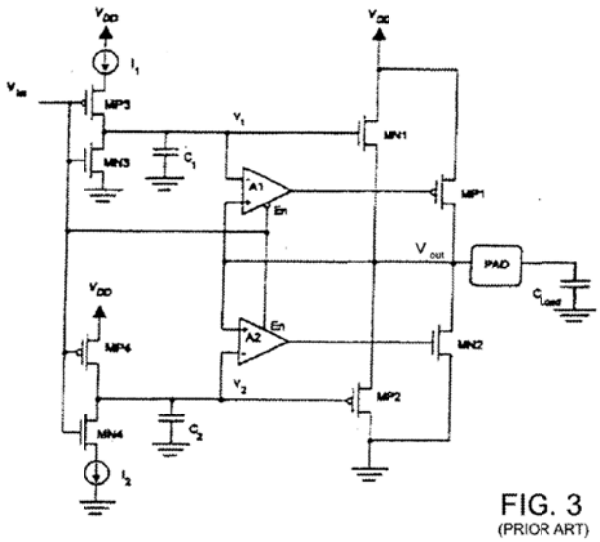

Fig. 3 of Abdel-Hamid, depicting a circuit diagram illustrating one known pad driver circuit comprising operational amplifiers for buffering during charging and discharging.

Appellants argue that the Examiner erred in finding that the circuits disclosed in Fig. 3 teach or suggest that the output signal of either slope control circuit (V_1 or V_2) has a slope controlled rising edge *and* a slope controlled falling edge. *Id.* (emphasis in original).

Appellants argue that Abdel-Hamid's Fig. 3 teaches that when input voltage V_{in} transitions from high to low, the transistor MN3 opens and the transistor MP3 closes, causing the first capacitor C_1 to be charged by the constant current source I_1 and therefore, up to a certain level, voltage V_1 will be sloped controlled on its rising edge. App. Br. 27. Appellants contend, however, that when the input signal V_{in} transitions in the opposite direction, from low to high, transistor MN3 will close, transistor MP3 will open, and V_1 will be coupled directly to ground. Thus, although voltage V_1 was slope controlled when the input signal V_{in} transitioned from high to low, the voltage V_1 was not slope controlled when the input signal V_{in} transitioned from low to high. *Id.* Appellants argue that the reverse occurs with respect to the circuit depicted in the lower half of Fig. 3. *Id.* As a result, Appellants contend, when input voltage V_{in} transitions from high to low, V_1 is slope controlled on its leading (rising) edge, but the leading edge of V_2 is not slope controlled, and *vice versa*, when V_{in} transitions from low to high. *Id.*

The Examiner responds that the slope control circuit depicted in Fig. 3 of Abdel-Hamid provides an output signal V_1 with a positive slope of l/C when the input signal transitions from high to low, and provides the output signal V_1 with a negative slope of l/C when the input signal transitions from low to high. Ans. 6. The Examiner finds that positive and negative slope edges formed when the slope control circuit is in charging and discharging

modes have the rate of l/C, respectively. *Id.* Therefore, finds the Examiner, both the rising and falling edges of the output of the slope control circuit is slope controlled with respect to the input signal. Ans. 6.

We are not persuaded by the Examiner's reasoning. Appellants' Specification defines "slope control" thus:

> The LIN [Local Interconnect Network] specification therefore states that "the signal shape should be carefully selected in order to reduce emissions on one hand and allow for bit rates up to 20 kbit/sec on the other": for this reason, the slope of the LIN driver output signal must be controlled and set to a convenient value, which emission measurements have shown to lie around 5us. This operation is commonly called slew rate control or slope control. This slope time must furthermore be independent of the battery voltage … and of the load….

Spec. 3. We interpret this to mean that the limitation at issue requires that the rate of change of both the rising and falling edges (as defined by the slope) of the output voltage of the LIN driver must fall within predetermined limits.

Provided with that definition, we agree with Appellants' functional interpretation of Fig. 3 of Abdel-Hamid. Specifically, we find that when V_{in} transitions from high to low, the output voltage of V_1 will be slope controlled with respect to its rising edge as capacitor C_1 charges. App. Br. 27. However, when V_{in} transitions from low to high, C_1 discharges directly to ground via MN3, and, since the resistance along this path is negligible, the falling edge of the voltage output of V_I is not slope controlled. *Id.* We further agree with the Examiner that the reverse happens with respect to the circuit constituting the lower half of Fig. 3 producing V_2. *Id.*

Moreover, because the Examiner's finding with respect to the operational amplifiers recited in the disputed limitation is based upon the Examiner's erroneous interpretation described *supra* (Ans. 6-7), we find the Examiner's findings similarly not persuasive. We consequently find that the Examiner erred in finding claim 1 to be obvious over the combination of Abdel-Hamid and Tang.

DECISION

The Examiner's rejection of claims 1, 3 and 5-9 as unpatentable under 35 U.S.C. 103(a) is reversed.

REVERSED

tj