# UNITED STATES PATENT AND TRADEMARK OFFICE

**UNITED STATES DEPARTMENT OF COMMERCE**
**United States Patent and Trademark Office**
Address: COMMISSIONER FOR PATENTS
P.O. Box 1450
Alexandria, Virginia 22313-1450
www.uspto.gov

| APPLICATION NO. | FILING DATE | FIRST NAMED INVENTOR | ATTORNEY DOCKET NO. | CONFIRMATION NO. |
|---|---|---|---|---|
| 09/919,584 | 07/30/2001 | Peter W.J. Jones | TBRX-P01-001 | 2595 |

28120 7590 01/29/2013
ROPES & GRAY LLP
IPRM - Floor 43
PRUDENTIAL TOWER
800 BOYLSTON STREET
BOSTON, MA 02199-3600

| EXAMINER |
|---|
| WANG, JIN CHENG |

| ART UNIT | PAPER NUMBER |
|---|---|
| 2677 | |

| NOTIFICATION DATE | DELIVERY MODE |
|---|---|
| 01/29/2013 | ELECTRONIC |

**Please find below and/or attached an Office communication concerning this application or proceeding.**

The time period for reply, if any, is set in the attached communication.

Notice of the Office communication was sent electronically on above-indicated "Notification Date" to the following e-mail address(es):

USPatentMail@ropesgray.com
USPatentMail2@ropesgray.com

UNITED STATES PATENT AND TRADEMARK OFFICE

---

BEFORE THE PATENT TRIAL AND APPEAL BOARD

---

*Ex parte* PETER W. J. JONES and DENNIS W. PURCELL

---

Appeal 2010-004179
Application 09/919,584
Technology Center 2600

---

Before JOHN C. MARTIN, MARC S. HOFF,
and CARLA M. KRIVAK, *Administrative Patent Judges*.

MARTIN, *Administrative Patent Judge*.

DECISION ON APPEAL

This is an appeal under 35 U.S.C. § 134(a) from the Examiner's rejection of claims 1-24, which are all of the pending claims, in the Final

Office Action (hereinafter "Final Action"), mailed April 19, 2004.[1] We have jurisdiction under 35 U.S.C. § 6(b).

We AFFIRM-IN-PART.

## I. STATEMENT OF THE CASE

### A. Appellants' Invention

Appellants' invention is described as relating generally to devices and techniques for creating, in an electronic device, a display that gives a perception to a viewer of a full range of colors even though it uses only two different color elements (a longer wavelength and a shorter wavelength) rather than three color elements (i.e., red, green, blue). Specification 1:14-17.

Figure 1 of the Application is reproduced below.

[1] References herein to the Brief are to the "Amended Appeal Brief" filed April 30, 2007, which is supplemented by the "Summary of Claimed Subject Matter" in the "Response to Non-Compliant Brief With Amended Appeal Brief – Replacement Section," filed March 26, 2009. References to the Answer are to the "Examiner's Answer" mailed August 21, 2007, which replaced the "Examiner's Answer" mailed September 8, 2005. We also refer to the Advisory Action mailed November 2, 2004. No reply brief was filed.

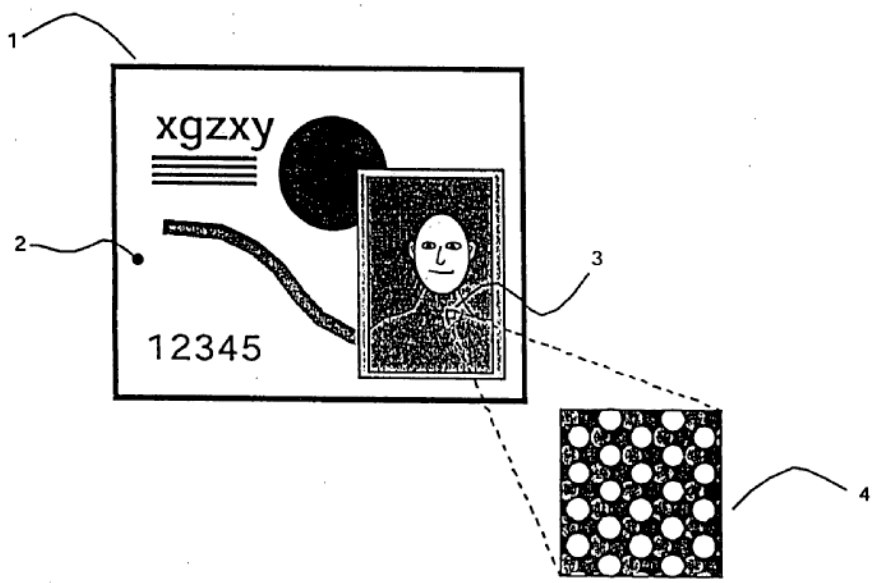


FIG. 1

Figure 1 depicts a prior art display that uses three different-color elements to create a full range of colors. *Id.* at 4:8-9. In this display 1, a representation 2 of graphics, type, and/or images is presented by means of a matrix 3 (shown in detail at 4) made up of three different-color elements. *Id.* at 6:11-13.

Figure 3 of the Application is reproduced below.

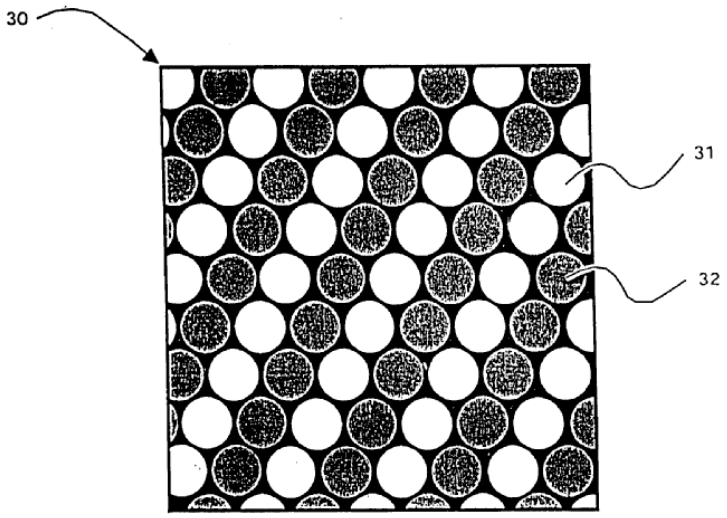


FIG. 3

Figure 3 "depicts a small section of a display using two different color elements, showing the matrix of longer[-]wavelength and shorter-wavelength color elements." *Id.* at 4:14-15. Elements 32 of the matrix 30 emit or pass a longer-wavelength band of light, and elements 33 emit or pass a shorter-wavelength band of light. *Id.* at 6:32-34.

Figure 4A is reproduced below.

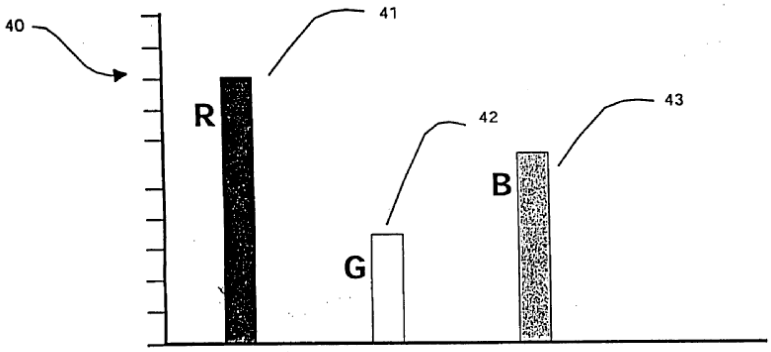


FIG. 4A

Figure 4A is a graph 40 showing how, for a particular spot in a three-color element display, the perception of a particular color is produced by the

combination of the "relative brightness levels" of a triplet of red (41), green (42), and blue (43) light-emitting -- or light-filtering -- elements for that particular spot. *Id.* at 7:6-9.

Appellants' invention is based on their discovery that

> one can achieve the perception of a similar particular color (over a wide range, from red to blue) by the use of only two[]different-colored elements if, in accordance with the invention, the relative brightness levels of the doublet of two different-colored elements bears a selected relationship to the relative brightness levels of the triplet of three different-colored (generally red green and blue) elements in the traditional display.

*Id.* at 7:10-14.

Figure 4B of the application is reproduced below.

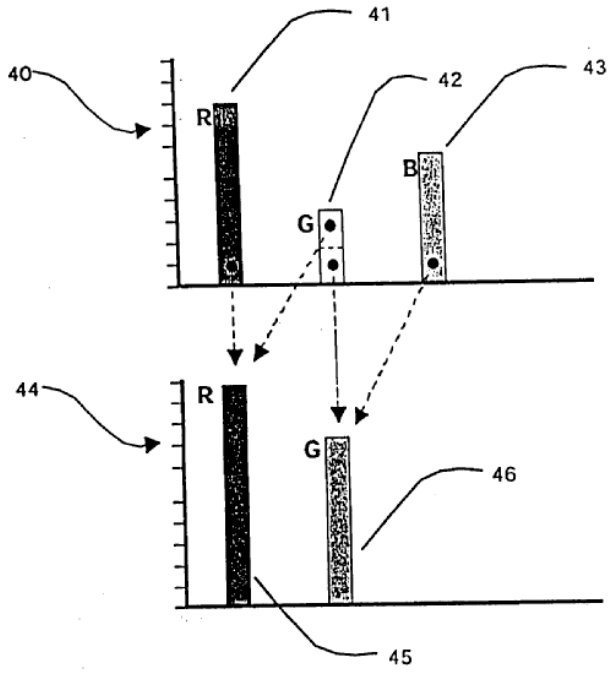


FIG. 4B

Figure 4B depicts diagrammatically one particular embodiment in accordance with Appellants' invention "for creating the perception of a full range of colors in a display made with a matrix of two-different color elements."

*Id.* at 7:17-19. As in Figure 4A, graph 40 depicts the relative brightness levels of a triplet of red (41), green (42), and blue (43) elements at a spot in a three-color display. *Id.* at 7:19-20. The arrows in Figure 4B show how this triplet of relative brightness levels can be translated into a doublet of relative brightness levels in a red/green two-color display matrix, represented by graph 44. *Id.* at 7:22-24. The brightness value of red emitter 45 in the two-color display is the sum of red brightness value 41 and one-half of green brightness value 42 in the three-color display, whereas the brightness value of the green emitter 46 in the two-color display is the sum of blue brightness value 43 and one-half of green brightness value 42 in the three-color display. *Id.* at 7:24-28.

Figure 5 is reproduced below.

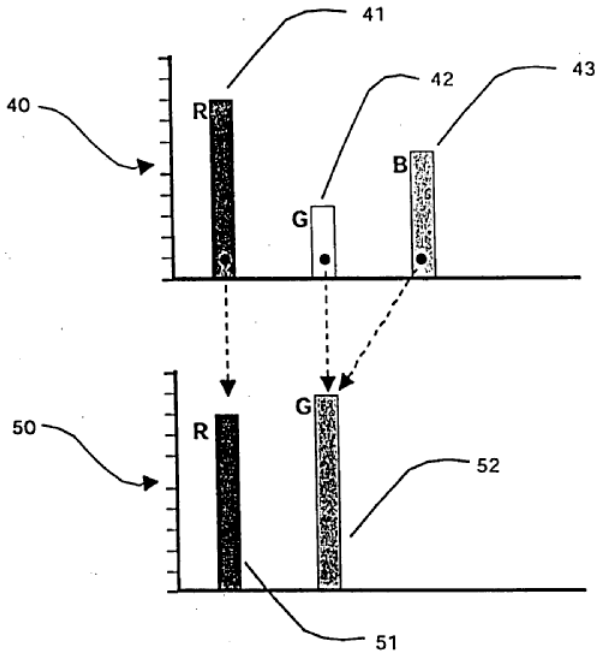


FIG. 5

Figure 5 graphically depicts another way of translating a triplet of relative brightnesses into a doublet of relative brightness in a red/green two-color display. *Id.* at 8:1-12. The brightness value of red emitter 52 in the two-color display is equal to red brightness value 41 in the three-color display, whereas the brightness value of green emitter 46 in the two-color display is the sum of blue brightness value 43 and green brightness value 42 in the three-color display.

Appellants' display process can additionally include alternate flashing of the colors in the two-color display. *Id.* at 2:25-27. Specifically, and referring to the embodiment depicted in Figures 9, 10A, and 10B (not reproduced below), the Specification explains that

> the matrix 100 can alternate between having, as shown in FIG.1[0]A, the longer wavelength elements[] 101turned on and emitting light while the shorter-wavelength elements[] 102 are

> turned off, and then as shown in FIG. 10B, having the longer-wavelength elements[] 103 turned off while the shorter-wavelength elements[] 104 are turned on and emitting light.

*Id.* at 10:12-16.

Appellants' invention can also include generating a noise signal representative of a random occurrence of red and green light, summing the relative brightness of the red component of the noise signal with the relative brightness of the two-color red element, and summing the relative brightness of a green component of the noise signal with the relative brightness of the two-color green element. *Id.* at 3:19-23. Or the noise can be added to only one color element. *Id.* at 3:23-24.

*B. The Claims on Appeal*

The independent claims are claims 1, 12, and 13. Claim 1 reads as follows:

> 1. A method that gives the perception of a display with a full range of color from a matrix of optical elements of a first or a second color, comprising
>
> providing a two-color display of optical elements of a first color and a second color and being arranged in an alternating pattern,
>
> determining, for an image presented on a full color display, the relative brightness for points of the image produced by the full color display, and
>
> translating the relative brightness of the points created by the full color display into a corresponding brightness for the respective points on the two-color display.

Claims App. (Br. 13).

Claim 12 is similar to claim 1 but adds a "sequentially activating" step:

> 12. A method for creating the perception of a display with a full range of colors from a matrix of optical elements of a first or a second color, comprising
>
> providing a two-color display of optical elements of a first and a second color arranged in an alternating pattern,
>
> determining for an image presented on a three color display, the relative brightness for each point of the image produced by the three color display,
>
> translating the relative brightness of each point created by the three color display into a corresponding brightness for the respective points on the two-color display, and
>
> sequentially activating optical elements of the first and the second color, for simulating the effect of a full color display.

*Id.* at 14.

Claim 13, an apparatus claim, reads as follows:[2]

> 13. An apparatus for visually displaying information on a two-color display, comprising
>
> a display having two-color elements,
>
> a memory device for storing information representative of a plurality of points for making up the image, each point being associated with information representative of three color components, and

[2] Because the Examiner has not indicated otherwise, we assume for purposes of deciding this appeal that he or she treated the "process for translating" limitation as an apparatus limitation.

> a process for translating the relative brightness of the three color components to relative brightness levels for the two-color elements of the display.

*Id.*

*C. The Rejection*

Claims 1-24 stand rejected under 35 U.S.C. § 103(a) for obviousness over Young[3] in view of Havel.[4] Final Action 3; Answer 3.

## II. DISCUSSION

The invention described in Young is directed to electronic color displays, including CRT and flat-panel matrix-addressable color displays, for generating color images through the substantial registry of the "opponent vectors" 12 and 14 depicted in Figure 1. Young 2:6-10.

Figure 1a of Young is reproduced below.

[3] Young et al., US 5,682,180, issued October 28, 1997.
[4] Havel, US 6,018,237, issued January 25, 2000.

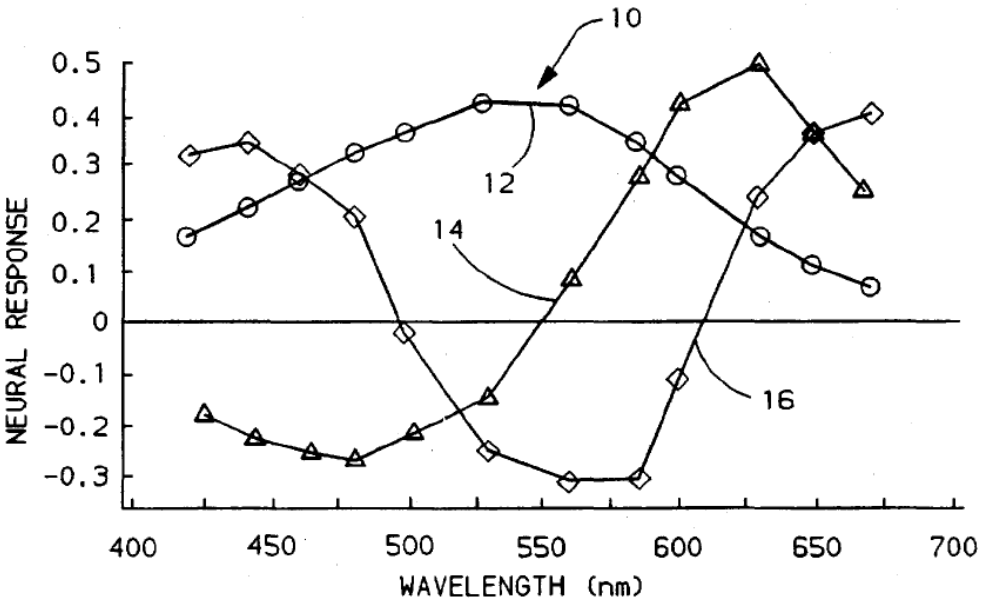


PRIOR ART

FIG. 1a

Figure 1a is a graph of the three principal chromatic components of the primary visual system. *Id.* at 2:41-42. Reference number 10 designates a set of spectral response curves or "opponent vectors" 12, 14, and 16 developed by applying an eigenvector analysis to a compilation of primate vision physiological data. *Id.* at 3:12-15. The black/white vector 12, which accounts for 59% of all color, is "loaded high with wavelength variables from the middle of the spectrum while loaded low with those at the spectral extremes." *Id.* at 3:15-19. The orange/cyan vector 14, which accounts for 28% of all color, is "loaded negatively by variables at short wavelengths and positively by variables at long wavelengths." *Id.* at 3:19-21.[5] The presence of one of the colors of any opponent vector inhibits the perception of its

[5] The green/magenta opponent vector 16 depicted in Figure 1a, which accounts for only 6% of the color (Young 3:22-23), is not used in Young's disclosed embodiments and therefore will not be discussed further.

opponent, or complement, color; thus, black is not perceived in the presence of white in the same location, orange is not perceived in the presence of cyan, and so on. *Id.* at 2:1-5. The opponent color phenomenon is a function of how the eye processes color information, not of the light itself. *Id.* at 4:10-12.

Young also explains that Figure 1b (not reproduced below) is "a plot of two opponent color vectors, green/red 17 and yellow/blue 18, which together also account for 87% of all perceived colors. Each of the opponent color vectors 17 and 18 now account for approximately 43.5% of the perceived colors." *Id.* at 3:35-39.[6]

Figure 2 of Young is reproduced below.

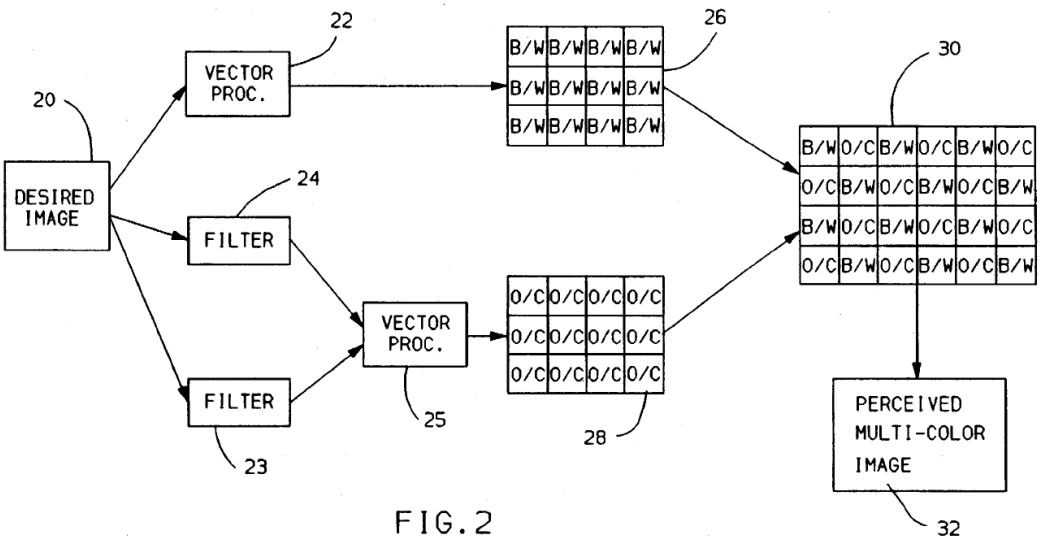


FIG.2

Figure 2 is a schematic diagram for implementing Young's opponent color concept in an electronic display device. *Id.* at 2:46-47. A desired image 20 to be reproduced is separated into two channels of information in any of

[6] In quotations herein from Young, bolding of the reference numerals is omitted.

several ways. *Id.* at 3:59-63. For example, the first channel can be processed (block 22) to be a black/white (B/W) opponent color channel representing the overall luminous intensity image (a simple black and white image) of the desired image 20. *Id.* at 3:63-66. The second channel is filtered (blocks 23 and 24) into orange and cyan images that are converted into electronic information and combined into an orange/cyan (O/C) opponent color vector (block 25). *Id.* at 3:66-4:4. Alternatively, the two channels of information can be generated by electronic data separation instead of by filtering light. *Id.* at 4:57-59. Specifically, Young explains:

> Conventional video cameras typically record three separate images of a scene, a red image, a green image, and a blue image, which represent traditional color theory images of the scene. The two separate opponent color vector information channels can be defined as follows. If each pixel of the red, green, and blue images represented by $R_i$, $G_i$, and $B_i$, respectively, then each pixel of the black/white vector can be defined as $(R_i+G_i+B_i)/3$. Each pixel of the orange/cyan vector can be approximated simply as $R_i-B_i$. A more accurate approximation for each pixel of the orange/cyan vector can be defined as $aR_i+bG_i+cB_i$, where a, b, and c are all constants, a being relatively large, b being relatively small, and c being negative.

*Id.* at 4:62-5:8.

Figure 5 of Young is reproduced below.

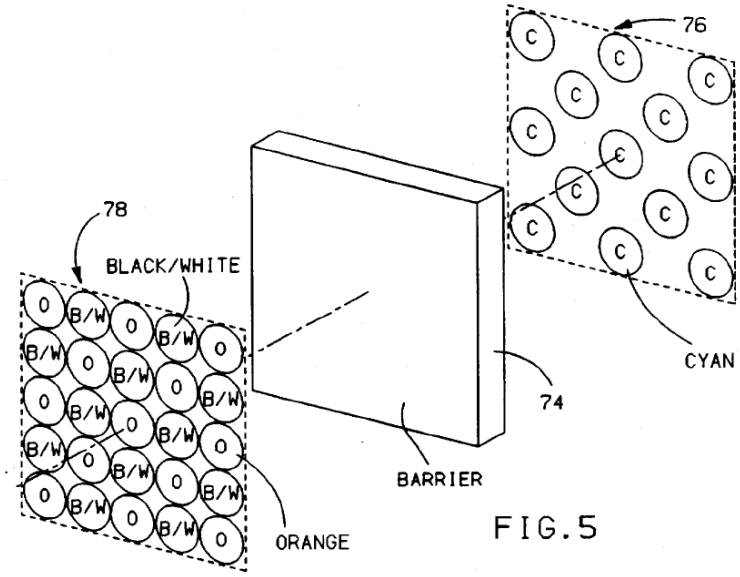


Figure 5 "is a schematic diagram showing phosphor distribution for a beam penetration CRT implementing the opponent color concept." *Id.* at 2:53-55.

Young explains:

> The white phosphors are excited as normal. The orange phosphors are excited by an electron gun set at a first voltage, and the cyan phosphors are excited by the same electron gun set at a higher voltage, capable of penetrating barrier 74. To obtain the orange/cyan color vector for a desired image, the total time the electron gun spends on any orange/cyan phosphor pair is constant and the ratio of the time each phosphor in each pair is excited corresponds to the desired ratio of their individual luminous intensities.

*Id.* at 6:53-61.

Figure 6 of Young is reproduced below.

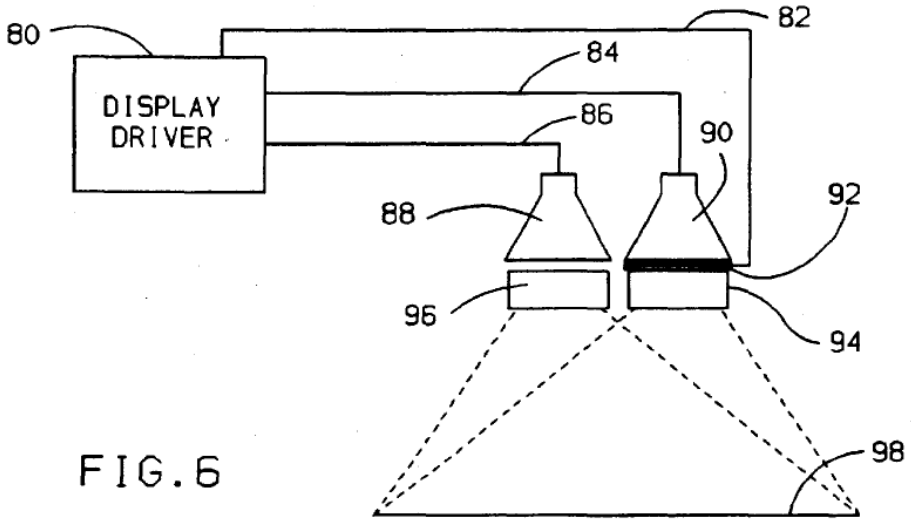


FIG. 6

Figure 6 is a schematic diagram for implementing the opponent color concept using a projection-type CRT display. *Id.* at 2:56-57. "The projection CRT 80 [*sic*: 88] projects a black/white image, focused through lens 96, onto the projection surface 98." *Id.* at 7:16-18. The combination of a second projection CRT 90, which projects white light, and a matrix-addressable dichroic filter 92 projects an orange/cyan image, focused through lens 94 onto the projection surface 98. *Id.* at 7:19-29.

Figure 7 of Young is reproduced below.

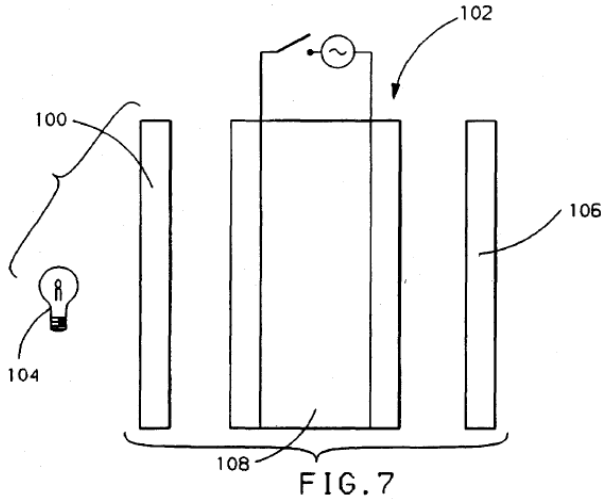


FIG. 7

Figure 7 is a schematic diagram showing a twisted nematic cell between two polarizers. *Id.* at 2:59-60. Between light source 104 and the front of the twisted nematic (TN) cell 108 is placed a neutral density polarizer 100, which is capable of producing linearly polarized light at all visible wavelengths. *Id.* at 7:37-41. An identical second polarizer 106 is placed behind the TN cell with its polarization direction at a right angle to that of the first polarizer. *Id.* at 7:37-44. The twisted nematic cell 108 rotates the direction of polarization of light by 90 degrees when no voltage is applied and by zero degrees when voltage is applied, thereby allowing the system to switch between a light transmitting (white) state and a light blocking (black) state. *Id.* at 7:45-49. If either (but not both) of the two neutral polarizers 100 and 106 is replaced by a single color dichroic polarizer, the system switches light between a white light state and a colored light state. *Id.* at 7:53-56. "If instead one of the two neutral polarizers is replaced by a pair of different colored dichroic polarizers (e.g., orange and cyan) which are crossed with respect to one another, the total system can be made to switch between the two colors in going from a voltage-off to a voltage-on state." *Id.* at 7:59-64.

Young's Figure 8 is reproduced below.

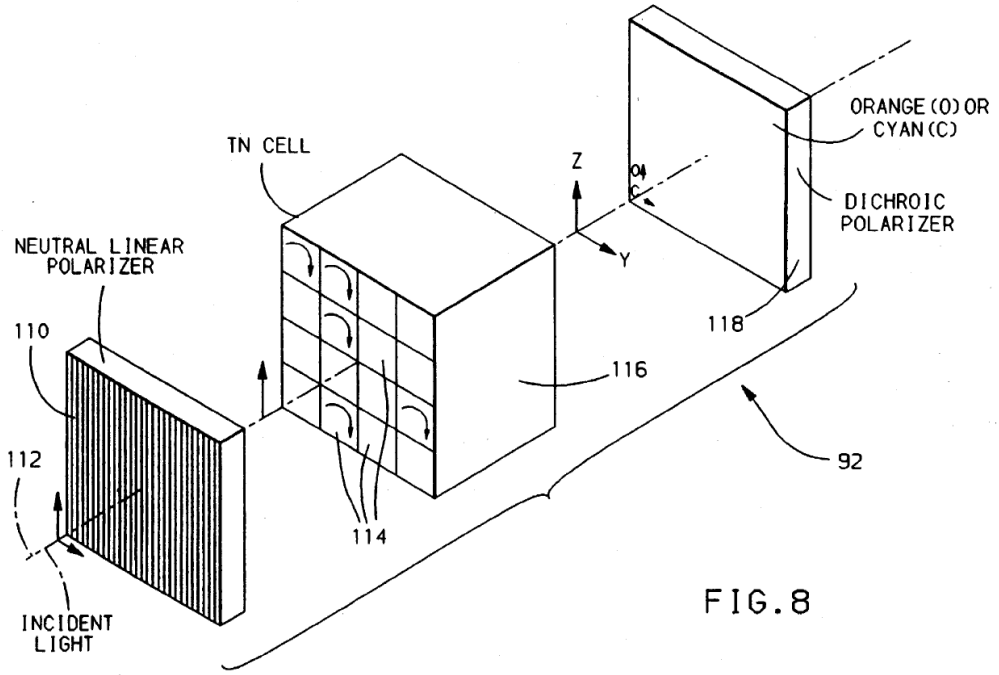


FIG. 8

Figure 8 is a schematic diagram for the dichroic filter 92 used in the Figure 6 display. *Id.* at 2:61-62. Incident light is polarized in the Z-axis direction by neutral linear polarizer 110 prior to striking TN cell 116, which is used to select the polarization angle for individual pixels 114. *Id.* at 8:19-30. When light polarized in the direction of the Z-axis or Y-axis passes through the dichroic polarizer 118, it is filtered thereby to be orange or cyan, respectively. *Id.* at 8:38-41. Light polarized in a direction between the Y and the Z-axes yields a combination of orange and cyan. *Id.* at 8:41-45.

The Figure 6 projection system when using dichroic filter 92 (Figure 8) is unable to produce a completely black screen because filter 92 still passes light from CRT 90 onto the projection surface 98 even if black/white CRT 88 is projecting a black image onto that surface. *Id.* at 9:23-29. This problem can be avoided by replacing dichroic filter 92 with dichroic filter 189, depicted in Figure 10, reproduced below.

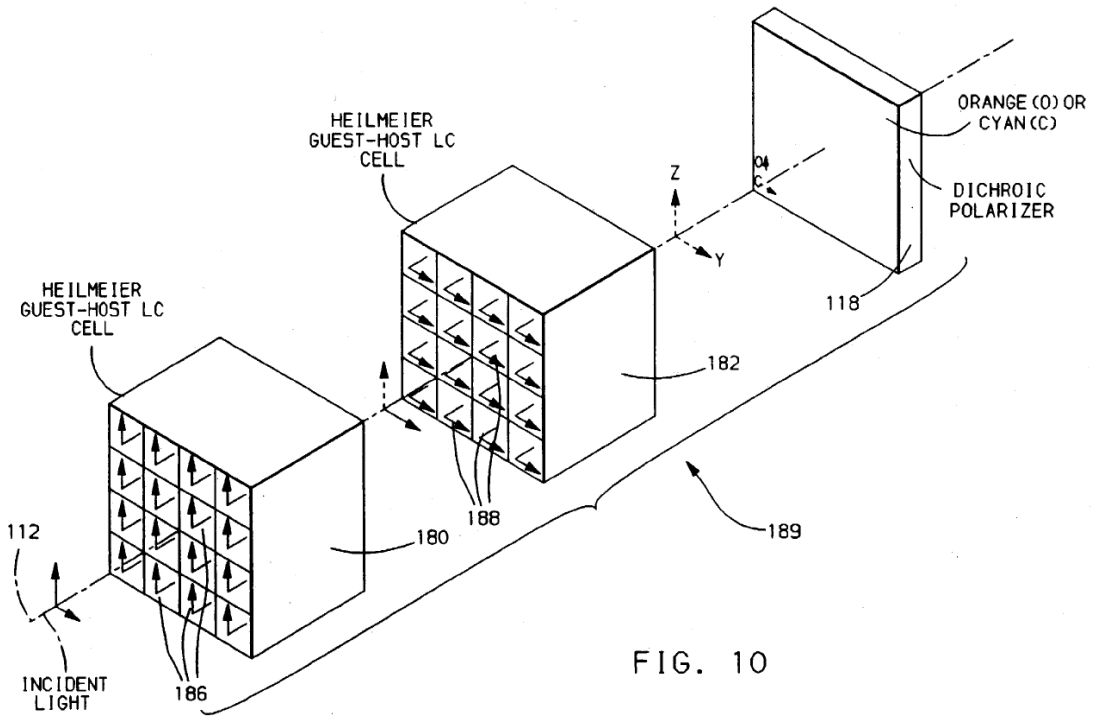


FIG. 10

Figure 10 is a schematic diagram for a dichroic filter 189 that can be used in the Figure 6 projection display "to achieve the orange/cyan vector and black." *Id.* at 2:65-67; 9:29-30. Filter 189 is constructed with two Heilmeier guest-host liquid crystal cells 180 and 182 and a dichroic polarizer 118. *Id.* at 9:31-33. "In operation of the filter 189, if zero voltage is applied to corresponding pixels of each of the cells 180 and 182, then light does not pass through the pixels." *Id.* at 9:46-48.

*A. Whether Young Discloses a Two-Color Display That Gives the Perception of "a Full Range of Color" (Claim 1)*

The Final Action does not specifically explain how the recited "first color" and "second color" are being read on Young. In the Advisory Action,

the Examiner read the claimed "first color" on "B/W" and the claimed "second color" on "O/C":

> Young teaches in Fig. 2 an alternating pattern of a B/W color and a O/C color. Young teaches that, with appropriate groupings of patterns and rotations, a first color of B/W and a second color of O/C can be produced because a B/W input pixel can be translated to a white only or black only pixel or a pixel with a color between white and black, and similarly an orange/cyan pixel can be translated to a pixel with an orange, a cyan or a combination of orange with cyan.

Advisory Action 2, para. 1. However, in the Answer, the Examiner instead reads the claimed "first color" and "second color" on Young's orange and cyan colors, respectively:

> [O]nly the yellow [*sic*: orange] and cyan are considered as the first color and the second color. The black and white elements are neutral colors as the human perceives them as neutral. Young provides only two non-neutral colors, yellow [*sic*: orange] and cyan, to simulate a two-color image which is later combined with another two-color image to produce a full color image. . . .
>
> . . . The optical elements of the yellow [*sic*: orange] and cyan are alternately arranged on a two-color display when the two-color image is displayed on a two-color display

Answer 8-9. Appellants, who did not file a reply brief, have not specifically addressed this "neutral" versus "non-neutral" analysis of the Examiner. Nevertheless, we understand the following argument in the Brief to mean that Young's display does not use two colors to give the perception of "a full range of color" (claim 1):

> Neither Young nor Havel discloses or suggests providing a two-color display of optical elements of a first color and a second

> color and being arranged in an alternating pattern to give the perception of a display with *a full range of color*.
>
> Instead, Young teaches the use of two opponent color vectors to account for the majority of all perceived colors and gives illustrative examples using orange/cyan and black/white opponent color vectors. (Col. 3, lines 39-49). The use of the orange/cyan and black/white opponent color vectors as depicted in Figures 2 and 4 demonstrates that Young uses <u>four</u> colors, i.e., orange, cyan, black, and white, to simulate *a full color image*.

Br. 4 (italics added). The Examiner found this argument unpersuasive because it rests on an unreasonably narrow interpretation of the claim phrases "a full range of color" (claim 1) and "a full range of colors" (claim 12):

> Appellant's two-color display of only two optical elements of red and green colors for achieving a *full* range of colors cannot be ascertained for the reasons below. From appellant's specification, the two colors are any two colors of the three-color elements RGB, e.g., the color red and the color green. However, the red and green hues only account for approximately 43.5% of the perceived colors (see Young column 3, lines 35-40) and yellow and blue hues account for another 43.5% of the perceived colors. According to the appellant's claim[ed] invention, appellant could provide only two color elements such as the red and green, to give [a] *full* range of colors. The red and green hues generated by the red and green emitters alone can *by no means* provide *full* range of the perceived colors with approximately 100% of the perceived colors. Appellant provides two-color display which is already known in the prior art. The optical elements such as the red and green emitters can give the perception of a display with only a limited range of perceived colors.

Answer 7-8. Thus, we understand the Examiner's position to be that the claim 1 phrase "gives the perception of a display with a full range of colors"

describes the effect of Young's orange and cyan phosphors as well as it describes the effect of Appellant's red/green two-color display. Appellants have not addressed, let alone shown error in, this reasoning of the Examiner.[7] That is, Appellants have not explained how the claim phrase "a full range of color" should be interpreted and why it reads on their disclosed red/green display examples but not on Young. The absence of such an explanation is effectively an invitation for the Board to consult Appellants' Specification and the prior art in order to arrive at some unspecified interpretation that is narrower than the Examiner's. This approach to arguing patentability fails to recognize that the burden of defining the invention rests on Appellants rather than on the Examiner or the Board. *In re Morris*, 127 F.3d 1048, 1056 (Fed. Cir. 1997). We therefore are not persuaded of error in the Examiner's

finding that Young discloses the "providing" step of independent claims 1 and 12.

---

[7] *See Ex parte Frye*, 94 USPQ2d 1072, 1075 (BPAI 2010) (precedential) (an appellant may attempt to overcome an examiner's obviousness rejection on appeal to the Board by: (1) submitting arguments and/or evidence to show that the examiner made an error in either (a) an underlying finding of fact upon which the final conclusion of obviousness was based or (b) the reasoning used to reach the legal conclusion of obviousness; or (2) showing that the prima facie case has been rebutted by evidence of secondary considerations of nonobviousness)." *See also id.* ("If an appellant fails to present arguments on a particular issue -- or, more broadly, on a particular rejection -- the Board will not, as a general matter, unilaterally review those uncontested aspects of the rejection.")

Appellants' "full range" argument is not relevant to independent claim 13, which does not recite giving a perception of a "full range" of color or colors. Appellants have not provided any reasoning in support of their assertion that "Young fails to teach or suggest: . . . 3) a display having **two-color** elements as required by independent claim 13." Br. 4.

For the foregoing reasons, it is not necessary for us to address the Examiner's alternative reliance (Answer 5) on Havel for a teaching of a two-color display system.

*B. Whether Young and Havel Disclose or Suggest the Recited "Determining" Step (Claims 1 and 12)*

The Examiner in discussing claim 1 in the Final Action found that "Young fails to specifically disclose determining for an image presented on a full color display, the relative brightness for points of the image produced by the full color display as claimed" and relied on Havel for such a teaching. Final Action 4. However, in the Advisory Action, after discussing Young's above-quoted formulas (Young 4:56-5:10) for deriving the B/W and O/C vectors from the $R_i$, $G_i$, and $B_i$ values of the three-color display, the Examiner found that "[t]herefore, Young teaches the claim limitation of determining for an image presented on a full color display the relative brightness for points/pixels of the image produced by the full color display." Advisory Action 2, para. 2.

Appellants argue:

> Young discusses using "three separate images of a scene, a red image, a green image, and a blue image [to define] the two

> separate opponent color vector information channels" (col. 4 lines 64-67), but Young does not discuss determining the brightness of the pixels in the original images.

Br. 5. Whether or not Young can be accurately characterized as "discuss[ing] determining the brightness" of the pixels in the original image, Young clearly discloses determining the brightness of these pixels. Appellants, correctly in our view, interpret the claim term "determining" as broad enough to read on measuring or ascertaining. *See* Br. 5 ("Havel does ***not*** teach calculating, computing, measuring, ascertaining, or otherwise determining the relative brightness for points on a full-color display[.]"). Young necessarily ascertains (i.e., determines) the $R_i$, $G_i$, and $B_i$ values for the image points in the original three-color image prior to calculating the black/white vector values as $(R_i+G_i+B_i)/3$ and calculating the orange/cyan vector values as either $R_i$-$B_i$ or $aR_i+bG_i+cB_i$. Appellants have not explained why it would be inaccurate to describe these $R_i$, $G_i$, and $B_i$ values as "brightness" values.

Nor are we persuaded by Appellants' further argument that "[f]urthermore, nowhere does Young suggest determining the ***relative*** brightness for points of an image produced by a full-color display[.]" Br. 5. Reading this claim term on Young's $R_i$, $G_i$, and $B_i$ values is consistent with the fact that Appellants' Specification describes the red, green, and blue brightness values 41-43 of graph 40 in Figures 4A, 4B, and 5 as "relative brightness levels." Specification 7:19-20.

For the above reasons, we are not persuaded of error in the Examiner's finding that Young discloses the "determining" step of claims 1 and 12.

We are also not persuaded by Appellants' assertion, regarding claim 13, that "Young and Havel fail to teach or suggest: . . . 3) a memory device for storing information representative of a plurality of points for making up the image, each point being associated with information representative of three color components as required by independent claim 13" Br. 5-6. Appellants have not presented any arguments specifically directed to this referenced language in claim 13.

*C. Whether Young Describes the Translating Step (Claims 1 and 12)*

The Examiner in the Final Action (at 3) read the claimed step of "translating the relative brightness of the points created by the full color display into a corresponding brightness for the respective points on the two-color display" on Young's column 8, lines 12-58, which describe dichroic filter 92 (Fig. 8) and its use in the Figure 6 projection system. Appellants responded by providing definitions of "hue" and "brightness"[8] and arguing that the cited passage describes controlling hue rather than brightness:

> In this section, Young describes the use of a polarizing filter to select the proportion of orange versus cyan in each image pixel; he does ***not*** discuss adjusting the brightness of the image or of any image pixel. Young teaches polarizing and filtering light on the Y axis to be orange, on the Z axis to be cyan, and between the Y and Z axes "to be a combination of orange and

[8] Appellants assert, without contradiction by the Examiner, that "[b]rightness refers to how bright the light is. Hue refers to the color, such as red, orange, or purple." Br. 4 (citing Jae S. Lim, Two-Dimensional Signal and Image Processing, p. 414 (1990)).

> cyan, the proportion of each color depending upon the angle of polarization." (Col. 8, lines 44-46). . . . Young is silent regarding the brightness of these hues.

*Id.* at 6. The Examiner responded to this argument by finding that "throughout Young's specification, Young discloses brightness of the hues orange and cyan" and citing three additional Young passages as support: (a) column 6, lines 14-33; (b) column 6, lines 53-65; and (c) column 10, lines 15-20. Answer 9-10.

The first of these cited passages reads in relevant part as follows:

> In obtaining the opponent color vector out of the orange and cyan phosphors, the total luminance of each orange and cyan phosphor pair is kept constant with the apportionment of the luminance of each phosphor in each pair being varied. The total luminance for all the orange/cyan phosphor pairs may be lowered or raised, however, for purposes of picture brightness, if needed.

Young 6:14-20. The Examiner describes this passage as "disclos[ing that] the total **<u>luminance</u>** (brightness) of each orange and cyan phosphor pair and the total **<u>luminance</u>** (brightness) for all the orange/cyan phosphor pairs may be **lowered or raised**." Answer 9. Appellants argue that this cited passage "does ***not*** disclose *translating* the luminance of each of the orange/cyan pairs." Br. 6. We agree. Young's $R_i$, $G_i$, and $B_i$ values *for a point* in the three-color image *are not translated into a corresponding brightness of the respective point* in the two-color display, as required to satisfy claims 1 and 12. Instead, as pointed out by Appellants, Young

> specifically states that "the total luminance for ***all*** the orange/ cyan phosphor pairs may be lowered or raised **... for the purposes of picture brightness**" (emphasis added) (column 6,

> lines 18-20). Thus, Young is disclosing changing the **overall** luminance of ***all*** the orange/cyan points on the display for the purpose of lowering or raising the overall brightness of the display. Young does not discuss adjusting the total luminance for any individual phosphor pair.

*Id.* at 6.

The second of the Young passages cited by the Examiner describes the beam penetration CRT embodiment depicted in Figure 5, explaining that "[t]o obtain the orange/cyan color vector for a desired image, the total time the electron gun spends on any orange/cyan phosphor pair is constant and the ratio of the time each phosphor in each pair is excited corresponds to the desired ratio of their individual luminous intensities." *Id.* at 6:57-61. The Examiner, in relying on this passage, appears to be reading the claimed "a corresponding brightness for the respective points on the two-color display" (claim 1) on the brightness level of *either* of the orange and cyan phosphors in an orange/cyan pair. Specifically, the Examiner states:

> Young discloses varying the relative brightness of the orange and cyan hues. <u>In column 6, lines 53-65</u>, Young further discloses varying the luminance of the orange and cyan hues by exciting the orange phosphors at the first voltage (first luminous intensities) and by exciting the cyan phosphors at the higher voltage (second luminous intensities).

Answer 11. The Brief discusses this cited passage in Young as follows:

> While Young does mention that "the <u>apportionment</u> of the luminance of each phosphor in each pair [may be] varied" (emphasis added) (that is, the ratio of the luminance of the orange phosphor to the luminance of the cyan phosphor may be varied, while the total luminance remains constant) (column 6, lines 16-17), he does ***not*** teach adjusting the ***total*** luminance of each pair.

Br. 7 (brackets in original). This argument is unpersuasive because Appellants have not demonstrated that the phrase "a corresponding brightness for the respective points on the two-color display" (claims 1 and 12) is not broad enough to read on the brightness level of only one color or on the relative brightness levels of both colors. Nor have Appellants explained why their "total luminance" argument applies to claim 13, which more particularly recites "a process for translating the relative brightness of the three color components to *relative brightness levels* for the two-color elements of the display" (emphasis added).

The third Young passage cited by the Examiner describes the effect of replacing dichroic filter 92 (Fig. 8) of the Figure 6 display with dichroic filter 189 (Fig. 10) as follows: "Since the filter 189 obtains both the orange/cyan opponent color vector and black, higher luminance contrast images can be produced using filter 189 in place of filter 92." Young 10:15-17. The Examiner finds that this passage "discloses . . . **using filter 189 to control the luminance** (brightness) of the images using two matrix addressable cells." Answer 11. Appellants have not acknowledged the Examiner's reliance on this particular passage, let alone demonstrated any error in that reliance.

For the above reasons, we are not persuaded of error in the Examiner's finding that Young discloses the "translating" step recited in claims 1 and 12 and are also not persuaded by Appellants' argument that "Young fails to teach or suggest: . . . 3) a process for translating the relative brightness of the three color components to relative brightness levels for the

two-color elements of the display as required by independent claim 13." Br. 7.

*E. Conclusions Regarding the Rejection of Independent Claims 1, 12, and 13*

Appellants have not persuaded us of error in the Examiner's finding that Young discloses each element of independent claims 1, 12, and 13. We therefore sustain the Examiner's rejection of these claims under 35 U.S.C. § 103(a) for obviousness over Young in view of Havel. In doing so, we treat Havel as cumulative with respect to Young.

*F. The Rejection of Dependent Claims 2-11 and 14-24*

*1. Claims 2, 3, 9-11, and 14-24 (Not Separately Argued)*

Appellants do separately argue the merits of the rejection of claims 2, 3, 9-11, and 14-24, instead merely asserting that they "include further limitations on independent claims 1 and 13 that are neither taught nor suggested by Young or Havel, either individually or in combination." Br. 9. The rejection of claims 2, 3, 9-11, and 14-24 is therefore sustained for the same reasons that we sustain the rejection of claims 1 and 13.

2. *Claims 4 and 5*

Claims 4 and 5 read as follows:

> 4. A method according to claim 1 [*sic*: 3], wherein flashing the two-color display includes alternating the display at the flashing period between the image presented in the first and the second color.

> 5. A method according to claim 4, including varying the flashing period.

Claims App. (Br. 4). In discussing the rejection of claims 4 and 5 in the Final Action, the Examiner stated only that "Young teaches a flashing period representative of a timing pattern for flashing the two-color display (figs. la-1b)." Final Action 5. In response to Appellants' assertion (Br. 8) that Young and Havel fail to disclose or suggest the recited "flashing period," the Examiner in the Answer more particularly states:

> Young teaches in column 1 and Figs. la and lb the varying *wavelength frequencies* associated with the color components such as the cyan and orange by using the filters. Changing the *wavelength frequencies* also changes the flashing period between the image presented in the first and the second color.
>
> Moreover, the neutral density polarizer is capable of producing linearly polarized light at all visible wavelengths and the system is allowed to switch between a light transmitting and a light blocking state and when either of the two neutral polarizers 100 and 106 [Fig. 7] is replaced by a single color dichroic polarizer, the system now switches light between a white light state and a colored light state or when one of the two neutral polarizers is replaced by a pair of different colored dichroic polarizers, the system is further allowed to switch between the two colors cyan and orange, thus changing the flashing periods of the optical elements.

Answer 13.[9] Because Appellants have not addressed this reasoning of the Examiner, the rejection of claims 4 and 5 is sustained.

---

[9] The second paragraph of this reasoning presumably refers to Young's description (at 7:34-8:11) of the Figure 7 embodiment and modifications thereof.

*3. Claims 6 and 7*

Claims 6 and 7 read as follows:

> 6. A method according to claim 1, wherein the step of translating includes translating the relative brightnesses of a point in a red-green-blue image to a relative brightnesses of a two-dimensional point of the first and the second color.
>
> 7. A method according to claim 1, wherein the full color display includes red, green and blue emitters, and wherein the step of translating includes
>
> summing the brightness for a three color red element with half the brightness of the three color green emitter to determine the relative brightness for the two-color first color emitter, and
>
> summing the brightness for a three color blue element with half the brightness of the three color green emitter to determine the relative brightness for the two-color second color emitter.

Claims App. (Br. 13-14). Regarding these two claims, the Examiner states only that

> Young teaches translating includes mapping a three dimensional coordinate representative of the relative brightness of a point to a two dimensional point (col. 8, lines 12-58) [describing dichroic filter 92 (Fig. 8)]. Young teaches the dimension of the coordinates consisting of XYZ which are in three dimensional and can be in two dimensional too.

Final Action 4-5. Appellants argue that "nowhere in this section does Young disclose translating the brightness of points in a full-color display to a corresponding brightness of the respective points in a two-color display, nor any means for doing so." Br. 8. This argument is unpersuasive because it fails to take into account the statement in this passage that "each pixel

orients the polarization of the light to obtain the required orange/cyan vector for the particular image pixel as indicated by the orange/cyan opponent color vector information channel 28 (FIG. 2)." Young 8:50-53. As noted above, Young, in discussing Figure 2, explains that orange/cyan vector can be calculated as either "$R_i$-$B_i$" or "$aR_i+bG_i+cB_i$." *Id.* at 4:62-5:8. The rejection of claim 6 is therefore sustained.

However, we agree with Appellants' argument that "claim 7 presents a ***specific*** formula for use in translating the brightness of points in a full-color display to the corresponding brightness of the respective points in the two-color display, and nowhere in his patent does Young suggest any similar such formula." Br. 9. The rejection of claim 7 is therefore not sustained.

*4. Claim 8*

Claim 8 reads as follows:

> 8. A method according to claim 7, including generating a noise signal, and summing the noise signal with the relative brightness for the two-color of the first and/or the second color emitter.

Claims App. (Br. 14). The Examiner found that

> Young teaches a noise signal and summing the noise signal with the relative brightness for the two-color of the first and/or the second color emitter (col. 3, lines 12-49). Young discloses green/magenta vector accounts for only 6% of the color. It is negative in the middle of the spectrum and positive at the extremes (the remaining 7% of the color variance is attributable to noise in the neural data).

Final Action 5. Because the cited subject matter does not cure the above-noted deficiency regarding parent claim 7, the rejection of claim 8 is not sustained.

## III. DECISION

The Examiner's rejection of claims 1-24 under 35 U.S.C. § 103(a) for obviousness over Young in view of Havel is *sustained* with respect to claims 1-6 and 9-24 and *not sustained* with respect to claims 7 and 8.

The Examiner's decision that claims 1-24 are unpatentable over the prior art is therefore affirmed-in-part.

No time period for taking any subsequent action in connection with this appeal may be extended under 37 C.F.R. § 1.136(a)(1). *See* 37 C.F.R. § 1.136(a)(1)(iv) (2012).

AFFIRMED-IN-PART

alw